No. 661,490. Patented Nov. 13, 1900.

E. A. BROWN.

WINDMILL REGULATOR.

(Application filed Jan. 31, 1900.)

(No Model.) 2 Sheets—Sheet 1.

Fig. 1.

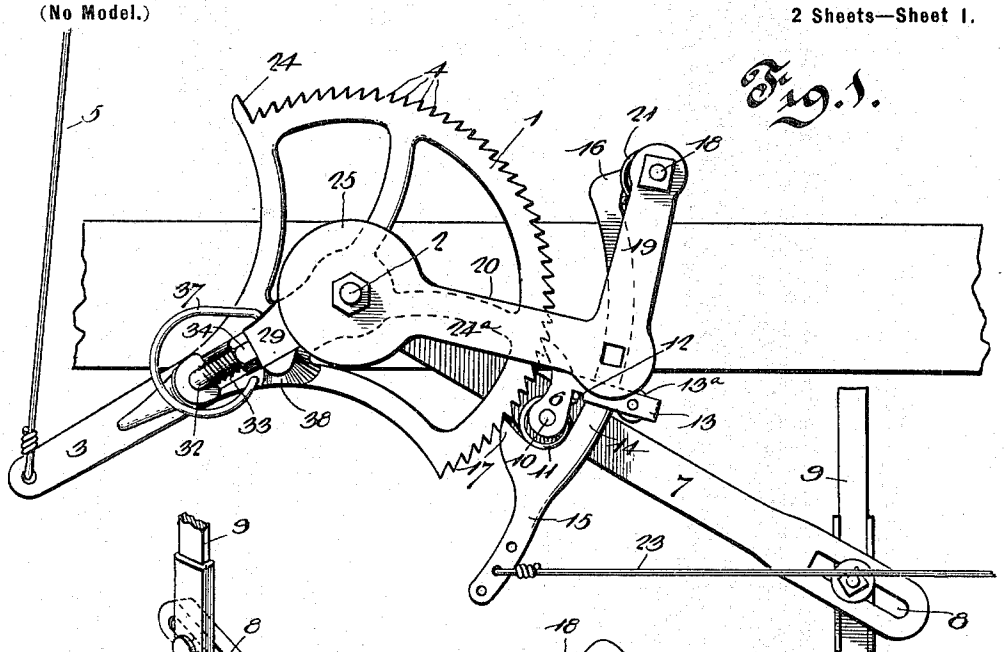

Fig. 2.

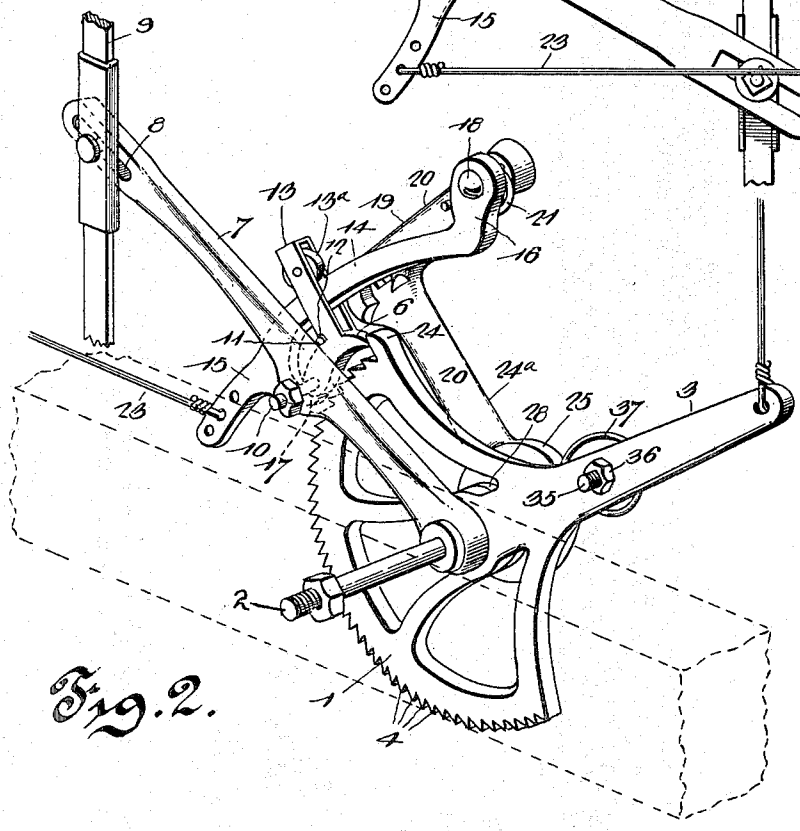

Witnesses
J. Frank Culverwell.
J. F. Riley

Ethan A. Brown, Inventor
By his Attorneys,
C. A. Snow & Co.

No. 661,490. Patented Nov. 13, 1900.

E. A. BROWN.

WINDMILL REGULATOR.

(Application filed Jan. 31, 1900.)

(No Model.) 2 Sheets—Sheet 2.

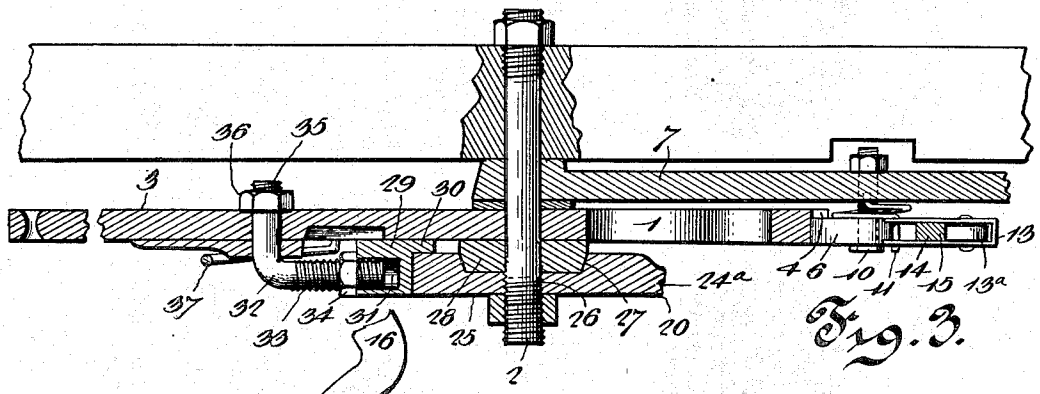

Fig. 3.

Fig. 4.

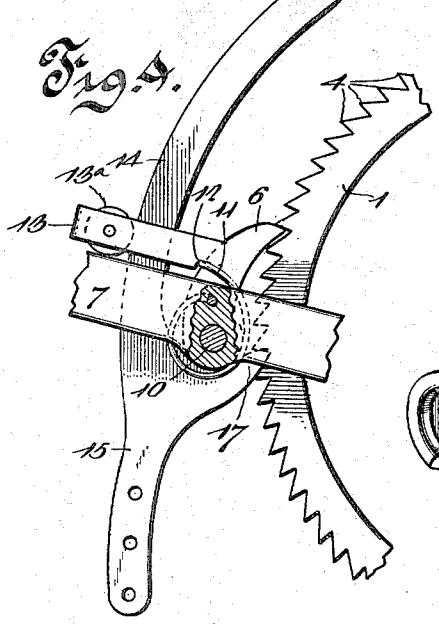

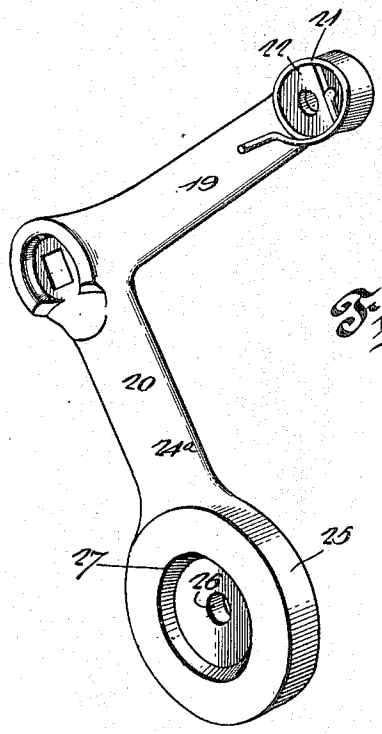

Fig. 5.

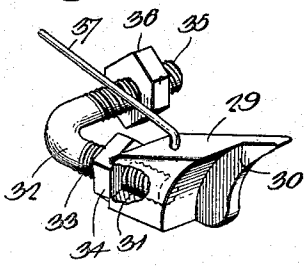

Fig. 6.

Witnesses

J. Faulkenberwell.

H. J. Riley

Ethan A. Brown, Inventor.

By his Attorneys,

C. A. Snow & Co.

UNITED STATES PATENT OFFICE.

ETHAN ALLEN BROWN, OF WAVERLY, IOWA, ASSIGNOR TO BERT KOPLIN, OF SAME PLACE.

WINDMILL-REGULATOR.

SPECIFICATION forming part of Letters Patent No. 661,490, dated November 13, 1900.

Application filed January 31, 1900. Serial No. 3,477. (No model.)

To all whom it may concern:

Be it known that I, ETHAN ALLEN BROWN, a citizen of the United States, residing at Waverly, in the county of Bremer and State of Iowa, have invented a new and useful Windmill-Regulator, of which the following is a specification.

The invention relates to improvements in windmill-regulators.

One object of the present invention is to improve the construction of windmill-regulators and to provide a simple, inexpensive, and efficient one adapted to be governed in its operation by the stage or quantity of water in a tank and capable of automatically throwing a windmill into operation when the water within the tank is lowered by consumption to a predetermined level and of automatically throwing the windmill out of the wind when the water in the tank rises to a predetermined level.

A further object of the invention is to provide a brake mechanism adapted when the windmill is thrown into the wind to check or retard the same, and thereby prevent it from jarring and violently shaking the tower.

The invention consists in the construction and novel combination and arrangement of parts hereinafter fully described, illustrated in the accompanying drawings, and pointed out in the claims hereto appended.

In the drawings, Figure 1 is an elevation of a windmill-regulator constructed in accordance with this invention. Fig. 2 is a perspective view showing the opposite side of the regulator. Fig. 3 is a horizontal sectional view, the arm of the ratchet-wheel and the operating-lever being in alinement. Fig. 4 is a detail view illustrating the arrangement of the dogs or pawls for engaging the ratchet. Fig. 5 is a detail view of the L-shaped frame or support. Fig. 6 is a detail perspective view of the friction device or brake.

Like numerals of reference designate corresponding parts in all the figures of the drawings.

1 designates a ratchet-wheel mounted on a rod or bolt 2 and provided with an arm 3, extending radially from it at a point approximately opposite the center of the series of ratchet-teeth 4 and connected at its outer end with a wire 5, designed to extend to the operating mechanism for throwing a windmill into and out of the wind. This operating mechanism may consist of the ordinary weighted lever, and it will be apparent that when the ratchet is free to move the weighted lever or other means employed for holding a windwheel in the wind will swing the arm 3 upward and start the windmill. The ratchet-wheel is substantially segmental and is provided with a semicircular series of teeth which are adapted to be engaged by an actuating-pawl 6, pivotally mounted on a lever 7, at a point between the ends thereof. The lever 7 is fulcrumed at its inner end on the bolt or rod 2, and it is provided at its outer end with a longitudinal slot 8, adapted to receive a pivot of a pump-rod 9, whereby the lever is connected therewith. When the pump-rod is reciprocated vertically by the operation of the windmill, the lever 7 will be oscillated, as will be readily apparent; but instead of employing the slot-and-pin connection between the outer end of the lever and the pump-rod any other suitable means may be used to connect the parts.

The ratchet-teeth are shouldered at their lower sides, and the actuating-pawl, which is pivoted at its lower end by a bolt 10, is normally pressed in the direction of the ratchet-wheel by a coiled spring 11, encircling the pivot-bolt 10 and secured at its inner end to the lever and at its outer end to the pawl 6, at the outer face thereof. The inner end of the coiled spring is preferably arranged in a perforation of the lever 7, and the outer end of the spring engages the back of the actuating-pawl 6 and fits in notches or recesses 12 of a yoke 13, extending rearward or outward from the actuating-pawl and receiving a curved portion 14 of a lever 15, designed to be connected with a float and adapted when the float falls to the proper level to draw the actuating-pawl out of engagement with the ratchet-wheel and free the same to permit the arm thereof to swing upward and start the windmill.

The curved portion 14 of the lever 15 is arranged concentric with the periphery of the ratchet-wheel; so that the yoke will slide freely on it when the lever 7 is oscillated by the reciprocation of the pump-rod during the op-

eration of the windmill. In order to facilitate the movement of the yoke or loop 13 on the curved portion of the lever, an antifriction-roller 13[a] is mounted on the rear or outer portion of the said loop or yoke in position for engaging the outer edge of the curved portion of the lever, and the yoke or loop, which loosely connects the actuating-pawl 6 with the lever, may be formed integral with the pawl or constructed in any other suitable manner. The lever is provided at its upper end with an arm 16, and it has a dog or tooth 17 near its lower end for engaging the ratchet-wheel to operate as a check-pawl. The arm 16 is pivoted by a bolt 18 or other suitable fastening device to an arm 19 of a substantially L-shaped support or frame 20, and it is engaged by a spring 21, whereby the tooth or dog 17 is maintained in engagement with the ratchet when the said lever 15 is free to move in that direction. The spring 21 is coiled around a disk or washer 22 and has one end engaging the arm 16 at the outer edge thereof, and its other end is seated in a perforation or socket of the arm 19 of the support 20.

The lower end of the lever 15 is designed to be connected with a wire 23 of a float, (not shown,) and when the water in the tank in which the float is placed falls to a predetermined level the float operates to draw the tooth or dog 17 out of engagement with the teeth of the ratchet-wheel, and the continued outward movement of the lever 15 engages the curved portion 14 with the outer end of the yoke, and thereby draws the actuating-pawl of the lever 7 out of engagement with the ratchet-wheel and permitting the weighted lever or other mechanism of the windmill to swing the arm 3 upward and throw the windmill into the wind.

When the water in the tank rises to the proper level, the wire 23 will be slackened sufficiently to permit the springs to force the pawl and the dog into engagement with the ratchet-wheel, and the continued reciprocation of the pump-rod acting on the lever 7 causes the ratchet mechanism to oscillate or partially rotate the ratchet-wheel and swing the arm 3 downward, and thereby draw the windmill out of the wind. The ratchet-wheel is provided at the upper end of the series of teeth with a projection or stop 24 to limit the movement of the said ratchet-wheel; but in practice when the device is applied to a windmill the arm 3 and the wire leading to the windmill will properly position the parts when the windmill is in operation.

The L-shaped support or frame is provided at its angle with an opening for the reception of a bolt or other suitable fastening device for securing it to the frame or tower. The arm 24[a] of the L-shaped support is provided at its outer end with a circular enlargement forming a friction-wheel 25 and provided with a central opening 26, through which the rod or bolt 2 passes. One face (the inner one) of the friction wheel or disk 25 is provided with a recess 27, receiving a spacing disk or washer 28, interposed between the support and the adjacent face of the ratchet-wheel, at the hub thereof.

The periphery of the brake wheel or disk is engaged by a brake-shoe 29, when the ratchet is released by the falling of the float and when the arm 3 swings upward to allow the windmill to be thrown into the wind, and the said brake-shoe is adapted to cause the windmill to be gradually brought into operation without jarring and shaking the tower and without injuring the structure, as is often the case when the windmill is thrown violently into the wind by the sudden and rapid falling of the weighted lever or other actuating mechanism.

The brake shoe is provided with a concave engaging face to fit the convex surface of the periphery of the friction wheel or disk, and it has a flange 30, arranged at the inner face of the said friction wheel or disk to assist in retaining the brake-shoe in position. The inner end of the brake-shoe is provided with a socket 31, into which extends a pivoted shank 32, adapted to permit the brake-shoe to swing laterally sufficiently to relieve the brake wheel or disk of friction when the arm 3 is drawn downward by the device to throw the windmill out of the wind. The pivoted shank is preferably threaded at 33 to receive an adjusting-nut 34, which engages the inner end of the shoe to regulate the frictional engagement of the same with the disk or wheel 25. The inner end of the shank 32 is provided with an integral pivot 35, extending through perforation of the arm 3, at an enlargement or boss thereof, and threaded at its extremity for the reception of a nut 36, which secures the shank to the arm 3, as clearly illustrated in Fig. 3 of the accompanying drawings. The brake-shoe is thrown toward the wheel and pressed against the same by a substantially U-shaped spring 37, arranged outside of the shank and extending around the inner end of the same, as clearly illustrated in Fig. 1 of the drawings. The terminal of one side of the spring is bent at an angle and secured in a suitable socket of the arm 3, and the other end of the spring is arranged in a socket of the brake-shoe, at the outer side thereof. The other side of the brake-shoe is arranged adjacent to a stop or lug 38, preferably formed integral with the ratchet-wheel and located at the lower side of the brake-shoe. The free side of the spring 37 is arranged at the upper face of the brake-shoe and is adapted to hold the same in engagement with the friction wheel or disk when the arm 3 swings upward and the windmill is thrown into operation.

The lever which is connected with the float is provided at its lower end with a series of perforations to permit the wire 23 to be adjusted to obtain the necessary movement of the lever 15.

It will be seen that the windmill-regulator is simple and comparatively inexpensive in construction, that it is positive, reliable, and automatic in operation, and that it will prevent a windmill from slamming violently and injuring the tower or mechanism when the wind-wheel is thrown into the wind.

Changes in the form, proportion, size, and the minor details of construction within the scope of the appended claims may be resorted to without departing from the spirit or sacrificing any of the advantages of this invention.

What is claimed is—

1. In a device of the class described, the combination of a brake disk or wheel, a ratchet-wheel designed to be connected with a windmill and provided with a brake-shoe and adapted to oscillate to engage the same with the brake disk or wheel to retard the movement of the windmill when the same is thrown into operation, an operating-lever provided with an actuating-pawl, and a check pawl or dog, substantially as described.

2. In a device of the class described, the combination of a brake disk or wheel, a ratchet-wheel designed to be connected with a windmill and arranged to oscillate, and provided with a brake-shoe arranged to be carried into engagement with the brake disk or wheel by the oscillation of the ratchet-wheel, and means for operating the ratchet-wheel and for releasing the same, substantially as described.

3. In a device of the class described, the combination of a ratchet-wheel, means for actuating and for releasing the same, a brake disk or wheel, and a pivotally-mounted laterally-movable brake-shoe carried by the ratchet-wheel and arranged to frictionally engage the disk or wheel when the ratchet-wheel is released to permit the windmill to be thrown into operation, substantially as described.

4. In a device of the class described, the combination of a ratchet-wheel, means for operating and releasing the same, a threaded shank pivotally mounted on the ratchet-wheel, a friction or brake wheel, a brake-shoe carried by the shank and having a limited movement longitudinally thereof, a nut arranged on the threaded shank and engaging the brake-shoe, and a spring also engaging the brake-shoe to hold the same against the friction or brake wheel, substantially as described.

5. In a device of the class described, the combination of a ratchet-wheel, means for operating the same, a brake wheel or disk, a threaded shank pivotally mounted on the ratchet-wheel, a brake-shoe having a socket receiving the shank, a nut arranged on the shank and engaging the brake-shoe, a stop arranged at one side of the brake-shoe, and a spring engaging the brake-shoe at the opposite side thereof, substantially as described.

6. In a device of the class described, the combination of an approximately L-shaped support provided at one end with a friction disk or wheel, a ratchet-wheel provided with an arm, a brake-shoe carried by the ratchet-wheel and connected with the arm, an oscillating lever, a pawl mounted on the oscillating lever and arranged to actuate the ratchet-wheel, and a lever fulcrumed on the support and provided with a check pawl or dog engaging the ratchet-wheel, substantially as described.

7. In a device of the class described, the combination of a ratchet-wheel, an approximately horizontal lever, an actuating-pawl movably mounted on the lever and engaging the ratchet-wheel, and a lever arranged at an angle to the said lever and connected with and having a limited movement independent of the pawl and directly engaging the ratchet-wheel and adapted when swung backward to disengage the actuating-pawl also from the ratchet-wheel, substantially as described.

8. In a device of the class described, the combination of a ratchet-wheel, a substantially horizontal oscillating lever, an actuating-pawl engaging the ratchet-wheel and movably mounted on the lever and provided with a yoke, and a lever extending through the yoke and engaging the ratchet-wheel and adapted when drawn backward to disengage the actuating-pawl from the ratchet-wheel, substantially as described.

9. In a device of the class described, the combination of a ratchet-wheel, an actuating-pawl engaging the same and provided with a yoke, and a lever also engaging the ratchet-wheel and having a curved portion extending through the yoke, substantially as and for the purpose described.

10. In a device of the class described, the combination of a ratchet-wheel provided at one end with a stop and having an arm, a support having a brake-disk, an oscillating lever, an actuating-pawl pivotally mounted on the oscillating lever and engaging the ratchet-wheel and provided with a yoke, the lever 15 provided with a dog to engage the ratchet-wheel and having a curved portion extending through the yoke, a brake-shoe engaging the brake-disk and carried by the ratchet-wheel, and springs connected with the lever 15 and with the actuating-pawl, substantially as described.

11. In a device of the class described, the combination of a ratchet-wheel, an actuating-pawl engaging the same and provided with a yoke having an antifriction wheel or roller at its outer end, and a lever also engaging the ratchet-wheel and having a curved portion extending through the yoke, substantially as and for the purpose described.

In testimony that I claim the foregoing as my own I have hereto affixed my signature in the presence of two witnesses.

ETHAN ALLEN BROWN.

Witnesses:

ESTHER SEWARD,

BERT KOPLIN.