March 3, 1942. R. E. MATHES ET AL 2,274,841

PHOTO RADIO SYSTEM

Filed April 16, 1940 4 Sheets-Sheet 1

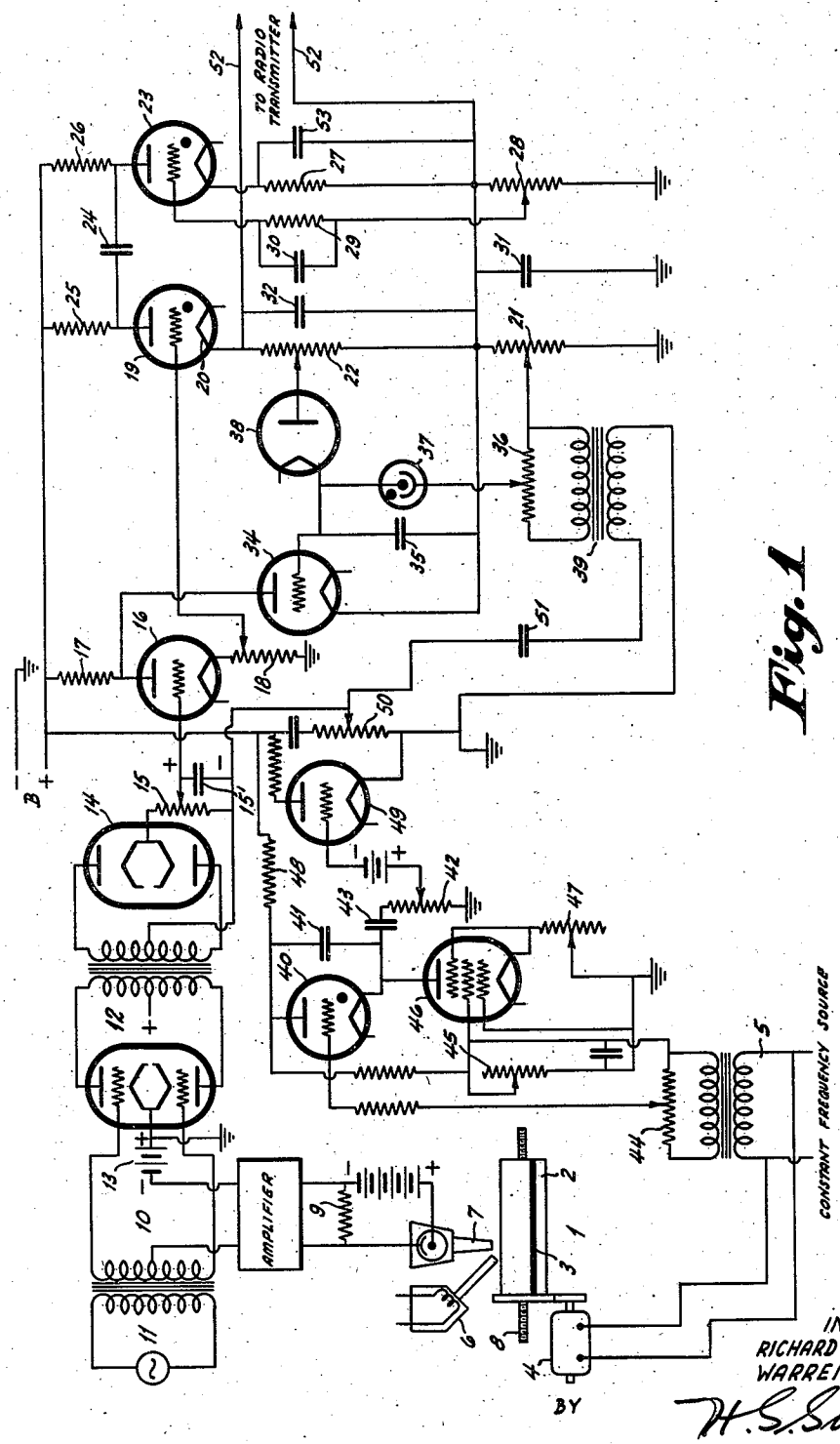

Fig. 1

INVENTORS
RICHARD E. MATHES AND
WARREN H. BLISS

BY H. S. Grover

ATTORNEY.

March 3, 1942. R. E. MATHES ET AL 2,274,841

PHOTO RADIO SYSTEM

Filed April 16, 1940 4 Sheets-Sheet 2

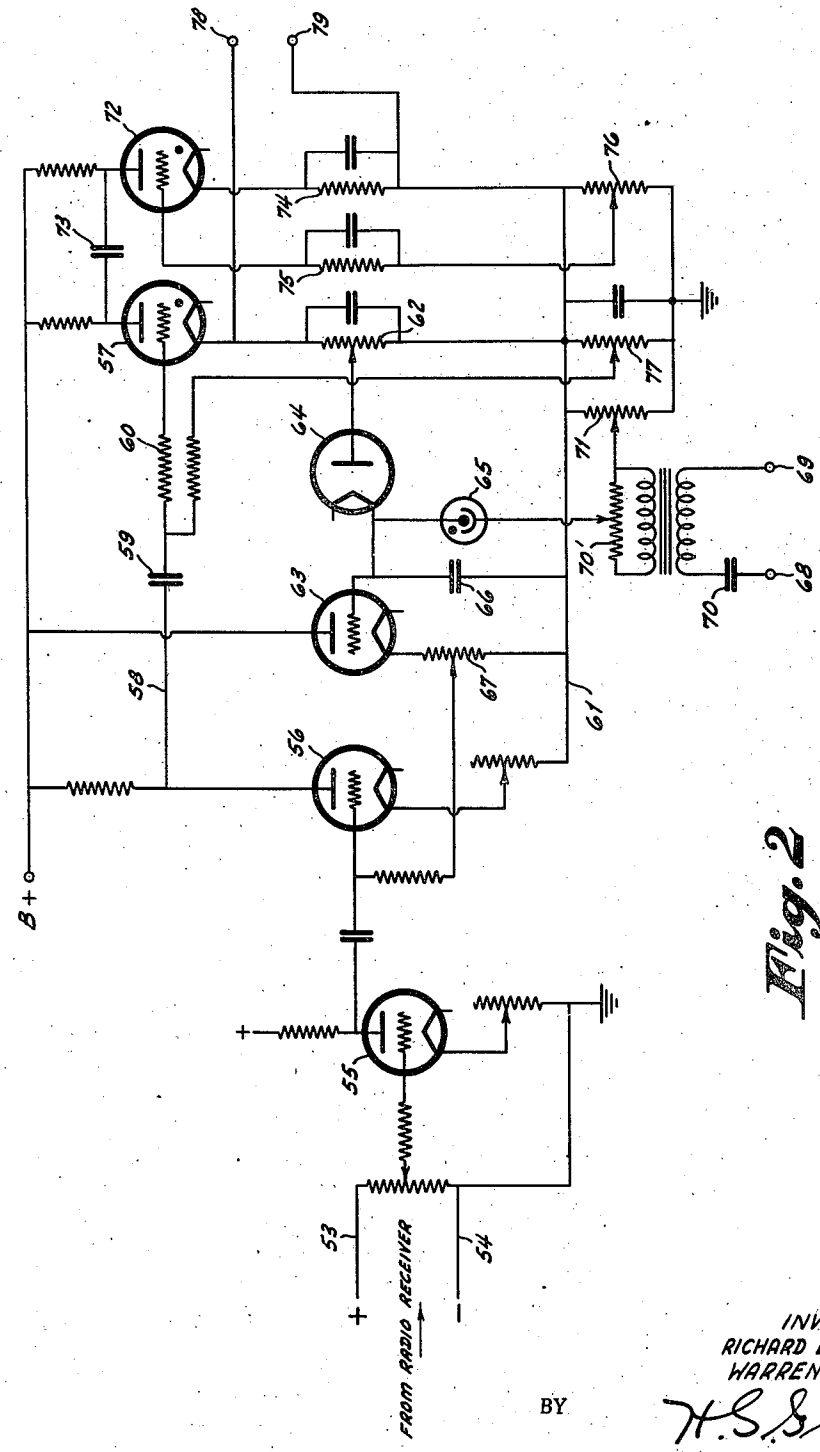

Fig. 2

INVENTORS
RICHARD E. MATHES AND
WARREN H. BLISS

BY H. S. Grover
ATTORNEY.

March 3, 1942. R. E. MATHES ET AL 2,274,841

PHOTO RADIO SYSTEM

Filed April 16, 1940 4 Sheets-Sheet 3

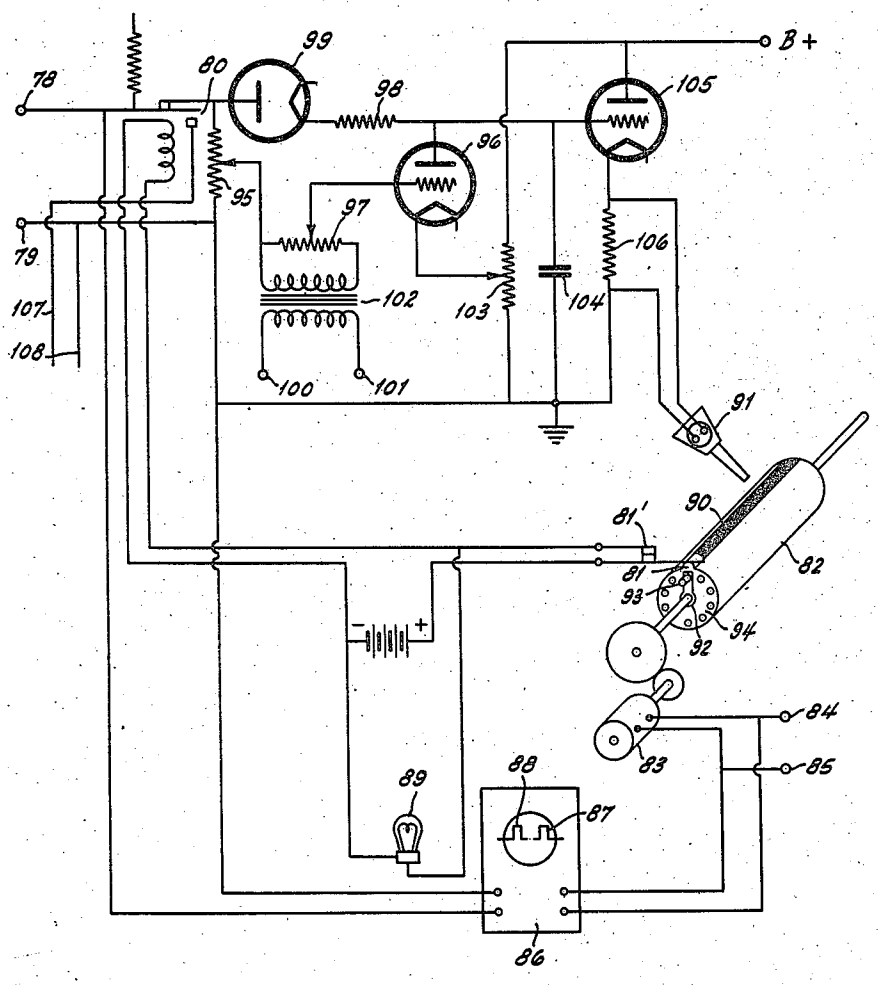

Fig. 3

INVENTORS
RICHARD E. MATHES AND
WARREN H. BLISS

BY H. S. Grover
ATTORNEY.

March 3, 1942. R. E. MATHES ET AL 2,274,841

PHOTO RADIO SYSTEM

Filed April 16, 1940 4 Sheets-Sheet 4

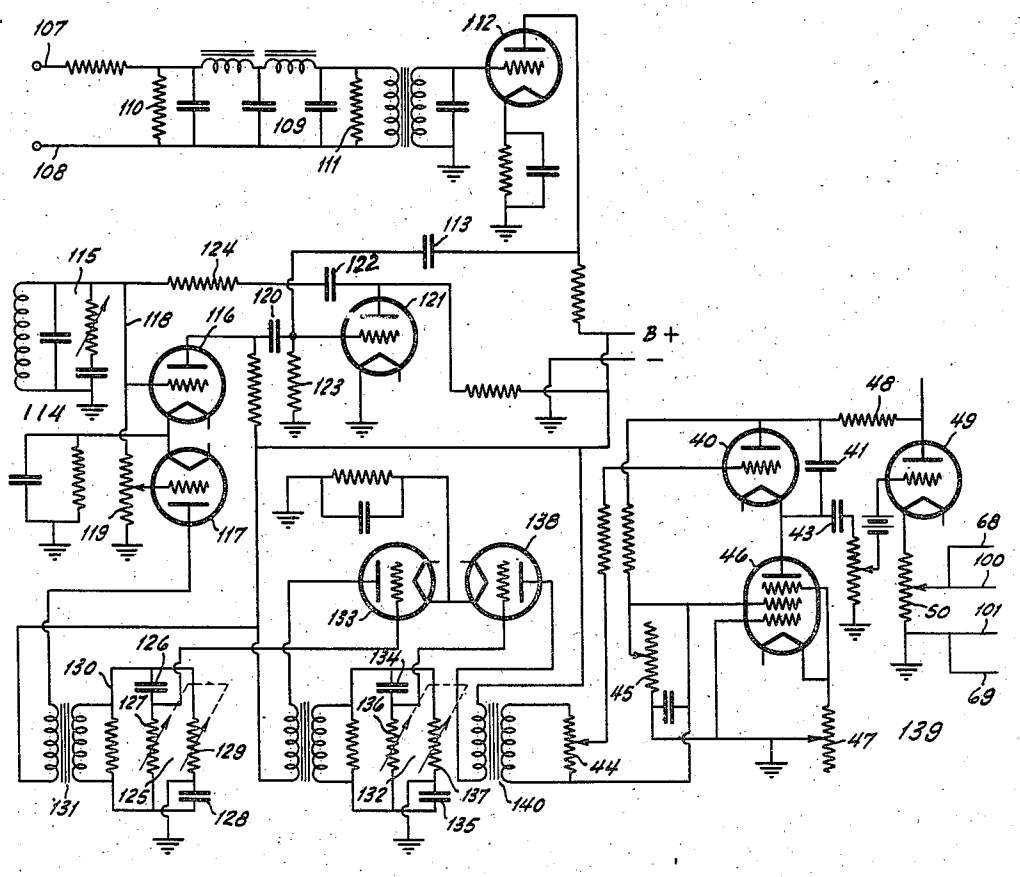

Fig. 4

INVENTORS
RICHARD E. MATHES AND
WARREN H. BLISS

BY H. S. Sowers

ATTORNEY.

Patented Mar. 3, 1942 2,274,841

UNITED STATES PATENT OFFICE

2,274,841

PHOTO RADIO SYSTEM

Richard E. Mathes, Westfield, N. J., and Warren H. Bliss, Orono, Maine, assignors to Radio Corporation of America, a corporation of Delaware

Application April 16, 1940, Serial No. 329,990

45 Claims. (Cl. 178—6.7)

This invention relates to signalling systems and is shown in connection with the sending of pictures, though by way of example only, since it may be used in other forms of communication.

In photo radio transmission, particularly over long distances, it is desirable to transmit the signals in telegraphic form, that is, by interrupted waves which appear as individual current pulses after detection at the receiver. For perfect recording these pulses should appear at the receiver exactly as sent out by the transmitter. This seldom happens over any considerable length of time as the pulses are materially changed by fading, echoes and other multipath effects. A particularly objectionable feature is the addition of elongations or "tails" to the pulses by a combination of signals arriving at slightly different times over different paths.

To overcome the defects heretofore experienced, we have devised a system in which it it an object to communicate by phase modulation and convert the signals at the receiver into amplitude or other modulation.

Another object is to transmit the signals in the form of pulses of constant time length and of varying phase.

Another object is to block out at the receiver all of the received pulses except the initial part.

Another object is to block out multipath additions to the signals.

Another object is to utilize at the receiver only the initial part of the received phase pulses and to change the phase modulation into voltage or current variations.

Other objects will appear in the following description, reference being had to the drawings in which:

Fig. 1 is a diagrammatic illustration of the transmitter.

Fig. 2 is a diagram of the limiter and wave shaper at the receiver.

Fig. 3 is a diagram of the impulse integrator at the receiver.

Fig. 4 is a diagram of the synchronous frequency source, the phase shifter and the sawtooth oscillator used at the receiver.

Referring to Figure 1, the transmitting system consists of a scanning device generally indicated at 1. This may be of various types but we have indicated by way of example a cylinder 2 on which the object to be scanned is clamped by a clamping device 3 which also may be of any construction. The cylinder is rotated at a constant speed by any means, a synchronous motor 4 being indicated for purpose of explanation. This motor may be run from the constant frequency supply source 5 of any kind, various types being well known in the art. (See article by Callahan, Mathes and Kahn on Time Division Multiplex in Radio Telegraphic Practice, I. R. E., vol. 26, No. 1, page 35, January, 1938.)

As usual the cylinder 2 moves longitudinally in Fig. 1 in respect to the scanning apparatus consisting of an illuminating device 6 and a light focusing and photo electric element designated as 7. The relative longitudinal travel between the cylinder and the devices 6 and 7 is diagrammatically illustrated as being produced by a screw axle 8. During each revolution of the drum 2 a spiral path is traced around the object and continued rotation finally scans the entire object. Once in each revolution the clamping means 3 passes under the photo-electric focusing element. This clamp will have uniform light value, preferably totally black, so that there will be a series of pulses, for example, about forty in our experiments, that are of uniform amplitude and phase. These are utilized for adjusting the receiving recorder with the scanner at the transmitter as later explained in detail.

As well understood, the scanning of the object in cylinder 2 will produce a voltage and current in resistance 9 of amplitude proportional to the light values of the elements scanned. The amplified varying potentials appear in the common leg of the grid circuit 10 of the push pull modulating tube into which is introduced the sub-carrier frequency from source 11. As is well known, there will appear in the output circuit 12 of the push pull modulator a voltage varying in amplitude with the modulations appearing in resistance 9.

As is well known, the voltage in the output 12 can be made to vary inversely with the modulation in resistance 9 by reversing the grid circuit connections to the resistance 9 and preferably reducing the negative grid bias 13. That is, the light and dark elements in the object can be made to produce increase and decrease of voltage, or vice versa, in the output circuit 12.

The modulated sub-carrier frequency in output 12 is fed into a rectifier 14 so that D. C. modulations appear in load resistance 15. The voltage in this resistance is filtered as at 15' and applied to the grid of triode 16 having resistance 17 in the plate supply lead and a load resistance 18 in the cathode lead connected to ground which is also the minus plate supply terminal.

The output voltage in resistance 18 is ad-

justably connected between the grid and cathode of a gas triode 19 known generally as a thyratron. The cathode connection is made from ground through resistance 21 and resistance 22. Gas triode 23 has its output circuit connected in parallel with that of gas triode 19 with a commutating condenser 24 connected between the plates of the two tubes. The gas triodes have resistances 25 and 26 in the plate leads.

Gas triode 23 has resistances 27, 28 in the cathode lead and a resistance 29 shunted by a condenser 30 is adjustably connected to the resistance 28 to furnish the proper negative bias. Resistances 21 and 28 have a by-pass condenser 31 and resistances 22 and 27 have by-pass condensers 32 and 53, respectively.

Vacuum tube 34 has its output circuit connected in parallel with that of vacuum tube 16 through resistance 17. Condenser 35 is connected between the grid and cathode of tube 34. The grid and cathode of this tube are also connected through resistances 21, 36 and the gas diode 37, the grid being connected to the cathode terminal thereof. The grid and cathode of vacuum tube 34 are also connected together through two element vacuum tube 38 and resistance 22, the grid being connected to the cathode of that tube.

To convert the amplitude variations from the scanner into variations in phase, a saw-tooth screen frequency is introduced through amplifier tube 49 and its load resistance 50 into the grid circuit of amplifier tube 16. This saw-tooth screen frequency is also introduced into resistor 36 through condenser 51 and transformer 39. The saw-tooth generator consists of a gas triode 40 having a condenser 41 connected between its plant and cathode. This cathode is also connected to the grid of amplifier tube 49 through by-pass condenser 43 and to ground through a current limiting device which, by way of example, we have shown as a pentode 46. Pentode 46 has its plate connected to the cathode of gas triode 40 and its cathode connected through biasing resistance 47.

With the saw-tooth generator thus described a saw-tooth voltage would be produced, but the frequency would not be constant enough to suit our purposes so we apply a strictly constant frequency to the grid of tube 40 from source 5. This constant frequency may be equal to the desired saw-tooth frequency or any multiple thereof.

By the term saw-tooth generator, as used herein, we mean a generator having a voltage wave with an inclined side and a substantially vertical side for each cycle. This wave form, simulating a right angle triangle, has the advantage that phase modulations may be obtained in the transmitted pulses substantially over the entire cycle. With a screen generator having each cycle of the voltage wave simulating an isosceles triangle the phase modulations could vary, at the most, over only half of the cycle. There is, therefore, an advantage in using the wave form having one vertical side in each cycle. It may be either at the beginning end or the concluding end of the cycle.

The operation of the transmitter is as follows:

It will be clear from the previous description that amplitude modulations of the scanner 1 appear across the input of amplifying tube 16 and that these are applied to the input of gas triode 19. The saw-tooth voltage from resistance 50, say 90 cycles per second, by way of example only, is superimposed on these modulations in the grid circuit of triode 16.

In producing the saw-tooth voltage condenser 41 is charged through current limiting pentode 46 in accordance with the well known voltage-time characteristic. With the D. C. bias in resistance 45 and the plate voltage applied through resistance 48, a point will be reached where the rising voltage of the condenser will be able to cause the gas triode to strike and thus discharge the condenser relatively instantaneously. The time required for charging the condenser to striking voltage is such that the ions in gas tube 40 will diffuse before the condenser is recharged. The frequency thus depends solely upon the time of charge, the discharge being instantaneous for all practical purposes.

Pentode 46, as is well known, has a relatively flat topped plate voltage-plate current characteristic above a predetermined plate voltage so that the charging current of the condenser 41 is made substantially constant over the charging period by working the pentode on the flat part of its characteristic.

The action of the saw-tooth generator as thus far described, would produce say approximately 90 cycles per second, but over an extended period there would be considerable variation. To produce a constant saw-tooth or screen frequency, we apply the constant frequency of the source 5 which will superimpose its frequency on the bias voltage in the grid circuit of gas triode 40 and cause such triode to strike always at the same point in the voltage wave of the constant frequency. If the constant frequency is a reasonable multiple of the desired saw-tooth voltage, for example, 810 cycles per second, then the triode 40 will always strike at the same point of each ninth cycle of the constant frequency, the condenser voltage being too low to cause it to strike on the eighth and previous cycles.

It will thus be clear that a constant saw-tooth voltage of desired value appears in load resistor 42. This is amplified by vacuum tube 49 and appears in resistor 50 which applies the saw-tooth voltage to the grid of amplifier 16 in series with the signal voltage in resistor 15.

Gas triode 19 will not strike until a predetermined voltage is applied to its grid from load resistor 18. Gas triode 23 has such grid bias that it will strike and continue to conduct until commuted by gas triode 19.

When the combined signal (amplitude modulation) and saw-tooth voltage is sufficient, tube 19 will strike. In this respect it may be said that neither the signal voltage nor the saw-tooth voltage alone is sufficient to cause tube 19 to strike, but the combination of the two over substantially the entire modulation range and saw-tooth cycle will cause it to strike.

As soon as gas triode 19 strikes, it instantaneously lowers the plate voltage of gas triode 23 to a negative value by action of condenser 24 in its inability to discharge instantaneously. This produces a counter voltage between the cathode and plate of triode 23 greater than the voltage tending to drive the plate current through it. When the condenser 24 discharges sufficiently to let the plate of triode 23 go sufficiently positive triode 23 restrikes, under its constant grid voltage. As soon as triode 23 restrikes, triode 19 will be commuted in an identical manner.

It is desired that triode 19 will strike only once for each saw-tooth cycle, and to prevent it from instantly restriking as the saw-tooth voltage

climbs toward its peak in the same cycle, we kill the signal in the grid circuit by action of tube 34. This acts in the following way:

Before the combined signal and saw-tooth voltage cause gas tube 19 to strike, tube 16 has normal amplifying power but as soon as tube 19 strikes condenser 35 is charged by the drop in resistance 22 applied through diode or Fleming valve 38. This applies sufficient positive voltage to the grid of tube 34 to cause it to draw heavy plate current. The sudden drop produced in resistance 17 lowers the plate voltage of tube 16 so that it virtually does not amplify the signal. This prevents tube 19 from restriking until the condenser discharges. Condenser 35 cannot discharge through gas diode 37 until the voltage across the diode is augmented to the striking value. This is produced by connecting the saw-tooth generator to the resistance 36 through a peaking condenser 51 which produces a peaked voltage near the close of each cycle of the saw-tooth wave. The combined voltage is sufficient to cause gas diode 37 to strike and discharge the condenser through resistances 36 and 21 at the end of the saw-tooth cycle. Therefore only once during each saw-tooth cycle can the combined signal and saw-tooth voltage cause the gas triode 19 to strike.

Since the saw-tooth voltage in each cycle is a linear function of the time, if the modulated signal drops in amplitude the combined signal and saw-tooth voltage will equal the striking value at a later time, assuming a saw-tooth voltage with the vertical side at the terminating end of the cycle. Conversely, with an increase in signal amplitude, the sum of the two voltages will reach the striking value at an earlier time. Therefore, the amplitude variations produced by the scanner are converted into phase modulations. These phase modulations appear as short pulses in load resistance 22 to which the output leads 52 are connected.

The phase modulated output at leads 52 may be connected to any appropriate transmitting apparatus for transmitting a series of high frequency radio signals that might be referred to as signal dots when detected at the receiver. These dots are of uniform amplitude and length as sent out over the air, but as previously explained they usually appear in the receiver as dots or pulses of non-uniform amplitude and non-uniform length due to action of the ionosphere. While travel over long distances usually changes the phase of the pulses in respect to those at the transmitter, the phase of one pulse with respect to another in passing over the same path is, of course, unchanged.

The receiving and detecting apparatus can be of any design, many of which are known, and therefore we have not illustrated them. It is assumed that the pulses have been received and detected and are presented to the leads 53, 54, Fig. 2, as D. C. pulses or "dots" of the same relative phase as at the transmitter, but generally of non-uniform amplitude and length due to atmospheric effects previously mentioned. These pulses are amplified to the desired amount, the amplifier 55 typifying this.

The output of the amplifier is fed to a special amplifying tube 56 similar in function to the amplifier 16 at the transmitter of Fig. 1. The output of the amplifier is connected to gas triode 57 by plate lead 58 through condenser 59 and resistance 60 and by cathode lead 61 and resistance 62. Blocking tube 63, Fleming valve 64, gas diode 65 and condenser 66 are similar in function to those indicated at 34, 38, 37 and 35, respectively, of Fig. 1. However, tube 63 produces its blocking action in a slightly different way, though, of course, this is not a necessary requirement. The blocking action is produced by resistance 67, which biases tube 56 to saturation when tube 63 increases its output due to the charging of condenser 66.

Condenser 66 is discharged by a peaked voltage produced from the saw-tooth voltage of leads, 68, 69, by means of condenser 70. The peaked voltage from resistance 70' combined with the voltage of condenser 66 discharges the condenser at a definite time through the gas diode 65 and resistance 71, as previously described in connection with Fig. 1.

Gas triode 72 has the same function as gas triode 23 of Fig. 1. It is normally conducting while gas triode 57 is normally non-conducting. Commutating condenser 73, resistances 74, 75, 76 and 77, and the associated condensers have similar functions to similar parts in Fig. 1. In Fig. 2 we have shown an adjustable resistance 77 for adjusting the bias of gas triode 57. This is adjusted so that gas triode 57 will fire on the arrival of every incoming pulse even though the amplitudes of the incoming pulse may vary widely due to radio circuit fading. Condenser 66 immediately causes tube 63 to draw such a heavy current that the positive bias in resistance 67 causes tube 56 to saturate for the rest of the cycle. Hence multipath additions cannot re-fire tube 57.

The output in resistance 62, as also that in resistance 22 of Fig. 1, has a constant amplitude, as will be readily apparent. Consequently, the pulses are limited both as to amplitude and time.

The output leads 78, 79, of the unit in Fig. 2 are tapped off of resistance 62 and as indicated in Fig. 3, these are connected to the input of a pulse integrator and recorder through an electromagnetic switch 80 energized by cam 81 and switch 81', once each revolution of the recording drum 82 which is run by synchronous motor 83 connected by leads 84, 85, to the source of constant frequency shown in detail in Figure 4. This source of constant frequency is of course kept in synchronism, or at a proportional speed, with the similar source at the transmitter, as will be later described.

The phase of the recorder is adjusted to agree with the transmitter by any means such as a cathode ray oscilloscope 86 well known in the art having its horizontal sweep circuit synchronized to the constant frequency terminals 84, 85. Its vertical deflection circuit is connected to the signal input 78, 79.

Inasmuch as the clamping means 3 at the transmitter causes a series of pulses of uniform phase corresponding to black, the two drums can readily be brought into phase if a test strip of white paper or paint is used on the transmitting drum. As the scanner light at the transmitter travels over the white strip during the major part of each drum revolution, pulses will appear at a constant position on the oscilloscope screen as at 88. However, when the transmitter scanning spot passes clamping block 3 the synchronizing pulses corresponding to black will be sent and since their phase differs from those for white they will appear as at 87 on the oscilloscope screen. The timing of the appearance of pulses at 87 can be compared with the flashes of light from lamp 39 which occur only when the clamp-

ing means 90 at the receiving drum passes under the recording light 91. One can readily adjust the clutch 92 between the motor 83 and the drum 82 so as to put the two drums in exact phase. This clutch is illustrated as having a pin 93 adapted to fit in any of a series of holes 94 in the drum. This is symbolic only as the mechanical clutch may be of various designs.

The leads 78 and 79 of Fig. 3 are connected through the switch 80 to resistance 95 across which is tapped a voltage divider consisting of the plate-cathode impedance of vacuum tube 96, resistance 98, and rectifier 99, the latter being used to permit passage of current only in one direction. The saw-tooth voltage generated by the unit in Fig. 4 applies its voltage to resistance 97 through leads 100 and 101 and transformer 102. Tube 96 is biased by resistance 103 to which the cathode is adjustably connected. This resistance is connected between ground and the positive side of the plate source, as shown. The grid of tube 96 is connected to an adjustable point in resistance 97. One end of resistance 97 is adjustably connected to resistance 95. The output of tube 96 is connected to integrating condenser 104 which applies its voltage to the input of class A amplifier 105. Resistance 106 in the cathode lead furnishes the voltage that operates the recording light 91 or equivalent unit. As well known, the hook-up may be designed to make either a positive or a negative record.

In the voltage divider, the resistance 98 is constant, but the impedance of tube 96 varies inversely with its grid voltage. Since condenser 104 is connected across this variable impedance in the voltage divider, a varying part of the signal pulse voltage will be applied to it.

It will be seen that the signal pulses are superimposed on the saw-tooth voltage, one for each cycle in the same phase relation as at the transmitter, because the saw-tooth generator at the receiver (Fig. 4) is kept in synchronism with the saw-tooth generator at the transmitter.

The grid bias of tube 96 is such that the saw-tooth voltage cannot cause plate current to pass, but the combination of the signal pulse voltage applied through resistance 97 can unblock the tube and vary the plate impedance. The earlier the phase of the pulse, the lower the grid voltage, the higher the impedance and the higher the signal voltage applied to condenser 104. The net result is that at the time the phased pulses come in, the tube conducts and leaves the condenser 104 with a definite voltage which it keeps until the next pulse arrives. If that pulse is earlier in phase, the grid voltage will be lower and the impedance drop will boost the condenser voltage to a higher value, which it will keep till the next pulse arrives. If that pulse is later in phase, the grid voltage will be higher and the plate impedance lower. Whereupon, the condenser will discharge through tube 96, then unblocked, to a voltage level commensurate with the grid voltage. The result is that the condenser acquires a voltage having a series of steps in respect to time and having substantially constant value in each step between adjacent pulses. This means that the amplifier 105 will apply to the recorder a voltage having a value proportional to the phase of the received pulses and consequently proportional to the amplitude modulations of the scanner at the transmitter.

Referring now to Fig. 4, the synchronizing unit and phase adjuster for producing a saw-tooth voltage has its input lines 107, 108 tapped off of the lines 78, 79, through switch 80 only during the closure of switch 81' by the cam 81 (Fig. 3) which as shown is when the clamping means 90 is passing under the recording light unit 91. This time in the revolution of drum 82 is useless as far as the recording act is concerned, so it can be used for phasing and synchronizing purposes without taking up any useful part of the recording time.

The signal input lines 107, 108 are connected to a low pass filter indicated generally at 109. This filter should have a cut-off that will eliminate the second harmonic of the signal pulse frequency and pass the fundamental. Resistances 110, 111 are matched input and output impedances, respectively, of the filter. The output of the filter is connected to the input circuit of class A amplifier tube 112 and the output of this tube is connected through blocking condenser 113 to the oscillating unit generally indicated at 114. This oscillating unit contains a tank circuit 115 tuned to the screen frequency at the transmitter, that is, to the frequency of the signal. The output of this tank circuit is connected to two class A amplifiers 116, 117, by line 118 and load resistance 119, respectively. To produce continuous oscillations there must be a feed back to the tank circuit and this is accomplished by leading the output of amplifier tube 116 through condenser 120 to the input of amplitude limiter 121. The output of amplifier 121 is connected to the tank circuit through condenser 122. Tube 121 has the usual grid leak 123. This puts the feed-back energy in phase with the oscillations in the tank circuit. Amplifier tube 121 has a grid voltage-plate current characteristic such that the energy fed back to the tank circuit through resistance 124 is substantially constant. For further explanation of this form of oscillator, reference is made to the patent of James N. Whitaker No. 2,162,520.

Of course no oscillating circuit can remain absolutely constant in frequency over an extended time but the one used herein should have a stability of about one part in 5×10^3 in order for the screen frequency of the transmitter, applied momentarily at the end of each scanning line through condenser 113, to keep it in step. With an oscillating circuit of this constancy the screen frequency (saw-tooth frequency of the transmitter) will keep the frequency in output resistance 119 in synchronism therewith. The output from this resistance is amplified by tube 117 and passed to the phase adjuster generally indicated at 125. This consists of condenser 126 and resistance 127 connected in parallel with a similar condenser 128 and resistance 129 reversely connected to the load resistance 130 of transformer 131. The two resistances 127 and 129 are connected for simultaneous adjustment. These resistances should be equal and each should have several times the impedance value of each of the condensers 126, 128, which latter should have the same value. With this arrangement the adjustment will produce a phase variation of 180°.

The output of the phase adjuster 125 is connected to a second phase adjuster 132 through class A amplifier 133. Condensers 134, 135, and resistances 136, 137, with simultaneous adjustment of the latter, enables one to obtain 180° change of phase in the input to class A amplifier 138. With this double phase adjuster 125, 132, one can make a phase adjustment of 360° in the output of the oscillator 114.

The output of amplifier 138 is connected to a

saw-tooth generator indicated at 139 through transformer 140. This saw-tooth generator is identical with that at the transmitter and its various parts have been given the same reference characters. Consequently its construction will be understood from the description of the saw-tooth generator at the transmitter and it need not be repeated.

The output resistance 50 of saw-tooth generator 139 is connected to the leads 68, 69, of Fig. 2 and to leads 100, 101, of Fig. 3, as the units in both of these figures require a saw-tooth voltage having the same frequency and phase as the saw-tooth screen frequency at the transmitter. It will be clear that the generator 114 at the receiver will be maintained automatically in synchronism with the generator at the transmitter but the phase of the saw-tooth voltage is adjusted manually by manipulation of the phase changers 125 or 132 or both. This can be done by use of an oscilloscope by observing the combined wave form applied to the grid of tube 96, Fig. 3. The phase of the saw-tooth wave from generator 139 can then be set so that the incoming pulses for black and white bear the proper phase with respect to the saw-tooth wave. Thus the phase adjusters can cause the saw-tooth generator at the receiver to take the correct phase which adjustment will be satisfactory for the entire recording of the picture. Obviously the phase could be adjusted before starting the picture by transmitting a "light wedge" with the same results.

The operation of the receiver is so similar to that of the transmitter that the extended description of the operation of the latter will suffice for the former, the variations between the two operations having already been given.

We have illustrated and described particular devices and circuits but this has been for purposes of explanation of the principles involved and it will be understood that various equivalents may be used without departing from the spirit of the invention.

It will be apparent that the phase pulses need not be sent out at the leading end of the signals, as they may equally as well be sent out at the lagging end by appropriate reversals of connections at the transmitters and no changes at the receivers.

Having described our invention, what we claim is:

1. In photo radio systems, a scanner producing picture modulations, a pair of gas triodes connected together, one normally conducting and one normally blocked, a saw-tooth generator, means to combine the scanner modulations with the output of the saw-tooth generator in the input circuit of the blocked gas triode whereby it fires at the time in each cycle of the saw-tooth voltage that the sum of the amplitudes of the modulation and saw-tooth waves in said cycle first reach the firing voltage, means for blocking the previously conducting gas triode when the other triode fires, and means to reblock the last mentioned gas triode and refire the other gas triode before the end of the cycle in which the blocked triode was fired.

2. In photo radio systems, a scanner producing picture modulations, a pair of gas triodes connected together, one normally conducting and one normally blocked, a saw-tooth generator, means to combine the scanner modulations with the output of the saw-tooth generator in the input circuit of the blocked gas triode whereby it fires at the time in each cycle of the saw-tooth voltage that the sum of the amplitudes of the modulation and saw-tooth waves in said cycle first reach the firing voltage, means for blocking the previously conducting gas triode when the other triode fires, means to reblock the last mentioned gas triode and refire the other gas triode before the end of the cycle in which the blocked triode was fired and means for transmitting the pulses in the output circuit of the second mentioned gas triode.

3. In photo radio systems, a scanner producing picture modulations, a pair of gas triodes connected together, one normally conducting and one normally blocked, a saw-tooth generator means to combine the scanner modulations with the output of the saw-tooth generator in the input circuit of the blocked gas triode whereby it fires at the time in each cycle of the saw-tooth voltage that the sum of the amplitudes of the modulation and saw-tooth waves in such cycle first reach the firing voltage, means for blocking the previously conducting gas triode when the other triode fires, and means to reblock the last mentioned gas triode and refire the other gas triode before the start of the next cycle of the saw-tooth voltage wave.

4. In photo radio systems, a scanner producing picture modulations, a pair of gas triodes connected together, one normally conducting and one normally blocked, a saw-tooth generator means to combine the scanner modulations with the output of the saw-tooth generator in the input circuit of the blocked gas triode whereby it fires at the time in each cycle of the saw-tooth voltage that the sum of the amplitudes of the modulations and saw-tooth waves in such cycle first reach the firing voltage, means for blocking the previously conducting gas triode when the other triode fires, means to reblock the last mentioned gas triode and refire the other gas triode before the start of the next cycle of the saw-tooth voltage and means for transmitting the pulses in the output circuit of the second mentioned gas tube.

5. In photo radio systems, a scanner producing picture modulations, a pair of gas triodes connected together, one normally conducting and one normally blocked, a saw-tooth generator, means to combine the scanner modulation with the output of the saw-tooth generator in the input of the blocked gas triode whereby it fires at the time in each cycle of the saw-tooth voltage that the sum of the amplitudes of the modulation and saw-tooth waves in said cycle first reach the firing voltage, means for blocking the previously conducting gas triode when the other triode fires, and means to reblock the last mentioned gas triode and refire the first-mentioned gas triode before the end of the cycle in which the blocked triode was fired, and means to transmit a signal corresponding to the pulse produced by the normally blocked gas triode when it was fired.

6. In photo radio systems, a scanner producing picture modulations, a pair of gas triodes connected together, one normally conducting and one normally blocked, a saw-tooth generator means to combine the scanner modulations with the output of the saw-tooth generator in the input of the blocked gas triode whereby it fires at the time in each cycle of the saw-tooth voltage that the sum of the amplitudes of the modulations and saw-tooth waves in said cycle first reach the firing voltage, means for blocking the

previously conducting gas triode when the other triode fires, means to reblock the last mentioned gas triode and refire the other gas triode before the start of the next cycle of the saw-tooth voltage wave, and means to transmit a signal corresponding to the pulse produced by the normally blocked gas triode when it was fired.

7. In photo radio systems, a circuit adapted to contain phased pulses representing signal modulations, an electric valve, a condenser connected to said circuit through said valve, and means to close a conducting circuit around said condenser when a signal pulse is received and to open said circuit when a signal pulse is not received whereby the condenser can receive a charge from a pulse greater in value than the preceding pulse and can release a portion of its charge through said conducting circuit when a pulse is received of less value than the preceding pulse, and a picture recorder having connections to said condenser to produce a record corresponding to the variations of potential at the terminals of the condenser.

8. In photo radio systems for receiving phase modulations, a triode having a blocking bias on its control electrode, means for applying the phase modulations to the input circuit of said tube, a condenser connected across the output circuit of said tube, an electric valve having its cathode connected to said condenser and its anode to one terminal of said means whereby the condenser receives a charge from each signal pulse higher than the previous pulse and discharges through the plate circuit of said tube on receipt of a pulse smaller than the previous pulse, and a picture recorder having connections to said condenser.

9. In photo radio systems, a circuit adapted to contain phased pulses representing signal modulations, an amplifier having its input circuit connected to the first-mentioned circuit, a gas triode having its input connected to the output of said amplifier, a second gas triode connected to the first gas triode, the first gas triode being normally non-conducting and the second gas triode being normally conducting, means connected to the amplifier to fire the first gas tube on arrival of a signal pulse, means to render the second gas triode non-conducting when the first gas triode becomes conducting and means energized by the output of the first gas triode to reduce the amplification of said amplifier to zero.

10. The method of communicating by signal characters transmitted at various phases of a predetermined frequency, which consists in receiving said signal characters, producing a constant voltage between adjacent pulses varying in amplitude with the phase of the initial one thereof and producing a record by the last-mentioned voltage.

11. The method of communicating by signal characters transmitted at various phases of a predetermined frequency, which consists in receiving said signal characters, producing thereby short voltage pulses at the start only of each received character to eliminate multipath additions, producing a constant voltage between adjacent pulses varying in amplitude with the phase of the initial one thereof and producing a record by the last-mentioned voltage.

12. The method of communicating by electrical pulses transmitted at various phases of a constant frequency to indicate a signal, which consists in receiving the electrical pulses, producing voltage pulses at the start only of each received pulse, producing a periodic voltage having said constant frequency, combining the said voltage pulses and periodic voltage to produce a resultant voltage, producing a constant voltage between adjacent pulses having an amplitude that varies with the phase of the initial one thereof and producing a record by the last-mentioned voltage.

13. The method of communicating by short electrical pulses of uniform length transmitted at various phases of a constant frequency to indicate a signal, which consists in receiving the electrical pulses, producing a periodic voltage having said constant frequency, producing an additional voltage from said pulses, blocking spurious additions to the received pulses by said additional voltage, and removing the additional voltage by the peak of said periodic voltage in each cycle thereof.

14. The method of transmitting signal characters of constant frequency and variable length, which consists in generating a periodic voltage of said constant frequency, transmitting a shorter electrical pulse at one end only of each of said characters at a phase of said frequency varying with the length of the characters, receiving said electrical pulses, producing a second periodic voltage having said constant frequency, producing an additional voltage upon receipt of each pulse, blocking spurious additions to each of the received pulses by said additional voltage, and thereafter removing the additional voltage by the peaks of said periodic voltage.

15. The method of transmitting signal characters of constant frequency and variable length, which consists in generating a periodic voltage of said constant frequency, transmitting a shorter electrical pulse at one end only of each of said characters at a phase of said frequency varying with the length of the characters, receiving said electrical pulses, producing an additional voltage upon receipt of each pulse, and blocking spurious additions to each of the received pulses by said additional voltage.

16. In a signaling system, a signaling device, a pair of tubes having input and output circuits, means for producing less than a blocking voltage in the input circuit of one tube and a blocking voltage in the input circuit of the other tube, whereby one tube is normally conductive and the other normally blocked, a generator of alternating voltages, means for combining the output voltages of said device and generator in the input circuit of the normally blocked tube, the output voltages of said device and generator in a half voltage cycle separately being less, and combined being more, than that required to render the normally blocked tube conductive, means for blocking the normally conductive tube when the normally blocked tube becomes conductive, and means for rendering the last-mentioned tube non-conductive before the end of said half cycle.

17. In a signaling system, a signaling device, a pair of tubes having input and output circuits, means for producing less than a blocking voltage in the input circuit of one tube and a blocking voltage in the input circuit of the other tube, whereby one tube is normally conductive and the other normally blocked, a generator of alternating voltages, means for combining the output voltages of said device and generator in the input circuit of the normally blocked tube, the output voltages of said device and generator in a half voltage cycle separately being less, and combined being more, than that required to ren-

der the normally blocked tube conductive, means for blocking the normally conductive tube when the normally blocked tube becomes conductive, means for rendering the last-mentioned tube non-conductive and the other tube conductive immediately after it is rendered conductive by said combined voltages, and means for preventing the last-mentioned tube from becoming conductive a second time in a half cycle.

18. In a signaling system, a signaling device, a pair of tubes having input and output circuits, means for producing less than a blocking voltage in the input circuit of one tube and a blocking voltage in the input circuit of the other tube, whereby one tube is normally conductive and the other normally blocked, a saw-tooth generator, means for combining the output voltages of said device and generator in the input circuit of the normally blocked tube, the output voltages of said device and generator in a half saw-tooth voltage cycle separately being less, and combined being more, than that required to render the normally blocked tube conductive, means for blocking the normally conductive tube when the normally blocked tube becomes conductive, and means for rendering the last-mentioned tube non-conductive before the end of said half cycle.

19. In a signaling system, a signaling device, a pair of tubes having input and output circuits, means for producing less than a blocking voltage in the input circuit of one tube and a blocking voltage in that of the other tube, whereby one tube is normally conductive and the other normally blocked, a saw-tooth generator, means for combining the output voltages of said device and generator in the input circuit of the normally blocked tube, the output voltages of said device and generator in a half saw-tooth voltage cycle separately being less, and combined being more, than that required to render the normally blocked tube conductive, means for blocking the normally conductive tube when the normally blocked tube becomes conductive, means for rendering the last-mentioned tube non-conductive and the other tube conductive immediately after it is rendered conductive by said combined voltages, and means for preventing the last-mentioned tube from becoming conductive a second time in a half cycle.

20. In a signaling system, a signaling device, a normally blocked gas tube, a generator of alternating voltage, means for combining the output voltages of said device and generator in the input circuit of said gas tube, the output voltages of said device and generator in a half cycle separately being less, and combined being more, than that required to fire said tube, means for quenching said gas tube immediately after firing, and means to prevent said gas tube from firing a second time in said half cycle.

21. In a photo radio system, a picture scanner, a normally blocked gas tube, a saw-tooth generator, means for combining the output voltages of said scanner and generator in the input circuit of said gas tube, the output voltages of said scanner and generator in a saw-tooth half cycle separately being less, and combined being more, than that required to fire said tube, means for quenching said gas tube immediately after firing, and means to prevent said gas tube from firing a second time in said half cycle.

22. In a photo radio system, a picture scanner, a normally blocked gas tube, a saw-tooth generator, means for combining the output voltages of said scanner and generator in the input circuit of said gas tube, the output voltages of said scanner and generator in a saw-tooth half cycle separately being less, and combined being more, than that required to fire said tube, means for quenching said gas tube immediately after firing, means to prevent said gas tube from firing a second time in said half cycle, and means to transmit the output of said gas tube when it fires.

23. In a signaling system, a signaling device, a pair of gas tubes, means for producing a firing bias voltage in the input circuit of one tube and less than firing bias voltage in the input circuit of the other tube, whereby one is normally conductive and the other is normally quenched, a generator of alternating voltage, means for combining the output voltages of the signaling device and generator in the input circuit of the normally quenched gas tube, the output voltages of said device and generator in a voltage cycle separately being less, and combined being more, than the firing voltage of the normally quenched tube, means for quenching the normally conductive gas tube when the normally quenched gas tube is fired by said combined voltages, and means to prevent the last-mentioned gas tube from firing a second time in said cycle.

24. In a signaling system, a signaling device, a pair of gas tubes, means for producing a firing bias voltage in the input circuit of one tube and less than firing bias voltage in the input circuit of the other tube, whereby one is normally conductive and the other is normally quenched, a saw-toothed generator, means for combining the output voltages of the signaling device and generator in the input circuit of the normally quenched gas tube, the output voltages of said device and generator in each saw-tooth voltage cycle separately being less, and combined being more, than the firing voltage of the normally quenched tube, means for quenching the normally conductive gas tube when the normally quenched gas tube is fired by said combined voltages, and means to prevent the last-mentioned gas tube from firing a second time in said cycle.

25. In a signaling system, a signaling device, a pair of gas tubes, means for producing a firing bias voltage in the input circuit of one tube and less than firing bias voltage in the input circuit of the other tube, whereby one is normally conductive and the other is normally quenched, a saw-tooth generator, means for combining the output voltages of said signaling device and generator in the input circuit of the normally quenched gas tube, the output voltages of said device and generator in a saw-tooth voltage cycle separately being less, and combined being more, than the firing voltage of the normally quenched tube, means for quenching the normally conductive gas tube when the normally quenched gas tube is fired by said combined voltages, means to prevent the last-mentioned gas tube from firing a second time in said cycle, and means for transmitting the pulses produced in the output circuit of the normally quenched tube.

26. In photo radio systems, a picture scanner, a pair of gas tubes, means for producing a firing bias voltage in the input circuit of one tube and less than firing bias voltage in the input circuit of the other gas tube, whereby one is normally conductive and the other is normally quenched, a generator of alternating voltage, means for combining the scanner and generator output

voltages in the input circuit of the normally quenched gas tube, the output voltages of said scanner and generator in a voltage cycle separately being less, and combined being more, than the firing voltage of the normally quenched tube, means for quenching the normally conductive gas tube when the normally quenched gas tube is fired by said combined voltages, and means to prevent the last-mentioned gas tube from firing a second time in said cycle.

27. In photo radio systems, a picture scanner, a pair of gas tubes, means for producing a firing bias voltage in the input circuit of one tube and less than firing bias voltage in the input circuit of the other gas tube, whereby one is normally conductive and the other is normally quenched, a generator of alternating voltage, means for combining the scanner and generator output voltages in the input circuit of the normally quenched gas tube, the output voltages of said scanner and generator in a voltage cycle separately being less, and combined being more, than the firing voltage of the normally quenched tube, means for quenching the normally conductive gas tube when the normally quenched gas tube is fired by said combined voltages, means to prevent the last-mentioned gas tube from firing a second time in said cycle, and means for transmitting the pulses produced in the output circuit of the normally quenched tube.

28. In photo radio systems, a picture scanner, a pair of gas tubes, means for producing a firing bias voltage in the input circuit of one tube and less than firing bias voltage in the input circuit of the other gas tube, whereby one is normally conductive and the other is normally quenched, a generator of saw-tooth voltage, means for combining the scanner and generator output voltages in the input circuit of the normally quenched gas tube, the output voltages of said scanner and generator in a saw-tooth voltage cycle separately being less, and combined being more, than the firing voltage of the normally quenched tube, means for quenching the normally conductive gas tube when the normally quenched gas tube is fired by said combined voltages, and means to prevent the last-mentioned gas tube from firing twice in said cycle.

29. In photo radio systems, a picture scanner, a pair of gas tubes, means for producing a firing bias voltage in the input circuit of one tube and less than firing bias voltage in the input circuit of the other gas tube, whereby one is normally conductive and the other is normally quenched, a generator of saw-tooth voltage, means for combining the scanner and generator output voltages in the input circuit of the normally quenched gas tube, the output voltages of said scanner and generator in a saw-tooth voltage cycle separately being less, and combined being more, than the firing voltage of the normally quenched tube, means for quenching the normally conductive gas tube when the normally quenched gas tube is fired by said combined voltages, means to prevent the last-mentioned gas tube from firing twice in a cycle, and means for transmitting the pulses produced by the firing of the normally quenched tube.

30. In a receiving system for signal pulses transmitted in timed relation with a predetermined frequency, a circuit adapted to contain said pulses, an amplifier having its input circuit connected to the first-mentioned circuit, a normally quenched gas tube having its input circuit connected to the output circuit of said amplifier, said gas tube being adapted to be fired by the amplified pulses, means energized by the output of said tube for producing a reduction of the voltage of the amplified pulses below the firing voltage of the said gas tube, an alternating current generator having said frequency, and means controlled by the voltage of said generator at a predetermined phase point in each cycle for annulling said reduction of voltage until the start of the next cycle.

31. In a receiving system for signal pulses transmitted in timed relation with a predetermined frequency, a circuit adapted to contain said pulses, an amplifier having its input circuit connected to the first-mentioned circuit, a normally quenched gas tube having its input circuit connected to the output circuit of said amplifier, said gas tube being adapted to be fired by the amplified pulses, a condenser charged by the output of said tube, means controlled by the charge of said condenser for producing a reduction of the voltage of the amplified pulses below the firing voltage of the said gas tube, an alternating current generator having said frequency, and means controlled by the voltage of said generator at a predetermined phase point in each cycle for discharging said condenser before the start of the next cycle.

32. In a receiving system for signal pulses transmitted in timed relation with a predetermined frequency, a circuit adapted to contain said pulses, a gas tube, means for producing a blocking voltage in the input circuit of said gas tube, an amplifier having its input circuit connected to the first-mentioned circuit and its output circuit connected to the input circuit of said gas tube, the amplified pulses being adapted to fire said gas tube, a second gas tube, means for producing a firing bias in the input circuit of the second gas tube, means connected to said gas tubes for quenching one tube when the other one fires, means energized by the output of the first gas tube for producing a reduction of the voltage of the amplified pulses below the firing voltage of the first gas tube, an alternating current generator having said frequency, and means controlled by the voltage of said generator at a predetermined phase point in each cycle for annulling said reduction of voltage until the start of the next cycle.

33. In a receiving system for signal pulses transmitted in timed relation with a predetermined frequency, a circuit adapted to contain said pulses, a gas tube, means for producing a blocking voltage in the input circuit of said gas tube, an amplifier having its input circuit connected to the first-mentioned circuit and its output circuit connected to the input circuit of said gas tube, the amplified pulses being adapted to fire said gas tube, a second gas tube, means for producing a firing bias in the input circuit of the second gas tube, means connected to said gas tubes for quenching one tube when the other one fires, a condenser charged by the output of the first gas tube for producing a reduction of the voltage of the amplified pulses below the firing voltage of the first gas tube, an alternating current generator having said frequency, and means controlled by the voltage of said generator at a predetermined phase point in each cycle for discharging said condenser before the start of the next cycle.

34. In a receiving system for signal pulses

transmitted in varying phase relation with respect to a predetermined frequency, a signal source adapted to contain said pulses, an impedance and an electric valve connected in series conducting relation across said signal source, a condenser connected across a portion of said circuit, means for varying a part of said impedance with the variations in phase relation of said pulses, and means controlled by the voltage of said condenser for recording signal elements.

35. In a receiving system for signal pulses transmitted in varying phase relation with respect to a predetermined frequency, a signal source adapted to contain said pulses, an impedance and an electric valve connected in series conducting relation across said signal source, a condenser connected across a part of said impedance, a saw-tooth generator having said frequency, means for combining the voltages of said signal pulses with the voltage of said generator, means for varying a part of said impedance with the variations of said combined voltages, and means controlled by the voltage of said condenser for recording signal elements.

36. In a receiving system for signal pulses transmitted in varying phase relation with a predetermined frequency, a signal source adapted to contain said pulses, a vacuum tube, means for biasing said tube substantially to cut off, an electric valve connected in a series circuit with the internal plate impedance of said vacuum tube in conducting relation across said signal source, a condenser connected across a portion of said circuit, a triangular wave generator having said frequency, means for combining the voltage of said signal pulses with the voltage of one half cycle of said generator in the input circuit of said vacuum tube, and means controlled by the voltage of said condenser for recording signal elements having shade densities depending upon the charge in said condenser.

37. In a receiving system for signal pulses transmitted in varying phase relation with a predetermined frequency, a signal source adapted to contain said pulses, a vacuum tube, means for biasing said tube substantially to cut off, an electric valve connected in a series circuit with the internal plate impedance of said vacuum tube in conducting relation across said signal source, a condenser connected across a portion of said circuit, a saw-tooth generator having said frequency, means for combining the voltage of the signal pulses with the voltage of said generator in the input circuit of said vacuum tube, and means controlled by the voltage of said condenser for recording signal elements having shade densities depending upon the charge in said condenser.

38. In a receiving system for signal pulses transmitted in varying phase relation with respect to a predetermined frequency, a signal source adapted to contain said pulses, a vacuum tube, means for normally blocking said tube, an electric valve connected in a series conducting circuit with the internal plate impedance of said vacuum tube in conducting relation across said signal source, a condenser connected across said plate impedance, a triangular wave generator having said frequency, means for combining the voltage of said signal pulses with the voltage of one half cycle of said generator in the input circuit of said vacuum tube, the voltage of said generator alone being less, and combined with said pulses being more, than that required to unblock said vacuum tube, and means controlled by the voltage of said condenser for recording signal elements having shade densities depending upon the charge in said condenser.

39. In a receiving system for signal pulses transmitted in varying phase relation with respect to a predetermined frequency, a signal source adapted to contain said pulses, a vacuum tube, means for normally blocking said tube, an electric valve connected in a series circuit with the internal plate impedance of said vacuum tube in conducting relation across said signal source, a condenser connected across said plate impedance, a saw-tooth generator having said frequency, means for combining the voltage of the signal pulses with the voltage of said generator in the input circuit of said vacuum tube, the voltage of said generator alone being less, and combined with said pulses being more, than that required to unblock said vacuum tube, and means controlled by the voltage of said condenser for recording signal elements having shade densities depending upon the charge in said condenser.

40. In a photo radio receiving system for signal pulses transmitted in varying phase relation with a predetermined frequency, a signal source adapted to contain said pulses, a vacuum tube, means for biasing said tube substantially to cut off, an electric valve connected in a series circuit with the internal plate impedance of said vacuum tube in conducting relation across said signal source, a condenser connected across said plate impedance, a saw-tooth generator having said frequency, means for combining the voltage of the signal pulses with the voltage of said generator in the input circuit of said vacuum tube, the voltage of said generator alone being less, and combined with said pulses being more, than that required to unblock said vacuum tube, means for supporting a recording surface, a recording unit, means for causing said unit to scan said surface in unison with said frequency, and means for causing said unit to record picture elements on said surface having shade densities varying with the charge in said condenser.

41. In a photo radio receiving system for signal pulses transmitted in varying phase relation with a predetermined frequency, a signal source adapted to contain said pulses, a vacuum tube, means for biasing said tube substantially to cut off, an electric valve connected in a series circuit with the internal plate impedance of said vacuum tube in conducting relation across said signal source, a condenser connected across said plate impedance, a saw-tooth generator having said frequency, means for combining the voltage of the signal pulses with the voltage of said generator in the input circuit of said vacuum tube, the voltage of said generator alone being less, and combined with said pulses being more, than that required to unblock said vacuum tube, means for supporting a light sensitive surface, a recording unit, means for causing said unit to scan said surface in unison with said frequency, and means for projecting light from said unit onto said surface that varies with the voltage of said condenser.

42. In photo radio systems, a circuit adapted to contain phased signal pulses transmitted in timed relation with a predetermined frequency, means for holding a record sheet, recording means for producing a record corresponding to said pulses by scanning lines across said sheet, a generator of alternating current controlling the speed of the scanning movement of said recording means, means controlled by the signal pulses for

controlling the phase and frequency of said generator, and means for switching the signal pulses to the last-mentioned means during the time of passage between the end of one line and the beginning of another and to said recording means at all other times.

43. In photo radio systems, a circuit adapted to contain phased signal pulses transmitted in timed relation with a predetermined frequency, means for holding a record sheet, recording means for producing a record corresponding to said pulses by scanning lines across said sheet, an oscillator having frequency control members adjusted to oscillate at substantially said frequency, means for switching the signal pulses to said members during the time of passage of the recording means between the end of one line and the beginning of another and to said recording means at all other times, and means for controlling the speed of the scanning movement of said recording means by the frequency and phase of said oscillator.

44. In photo radio systems, a circuit adapted to contain phased signal pulses transmitted in timed relation with a predetermined frequency, a drum having a clamp on its surface for holding a record sheet, a motor operating said drum, recording means for producing a record on said sheet corresponding to said pulses, an oscillator having frequency control members adjusted to oscillate at substantially said frequency, means for switching the signal pulses to said members when the recording means is passing over said clamp and to said recording means when it is passing over the remaining surface of said drum, and means for controlling the speed of said motor by the frequency and phase of said oscillator.

45. In photo radio systems, a circuit adapted to contain phased signal pulses transmitted in timed relation with a predetermined frequency, a drum having a clamp on its surface for holding a recording sheet, a motor operating said drum, recording means for producing a record on said sheet corresponding to said pulses, a generator of alternating current controlling the speed of said motor, means controlled by said signal pulses for controlling the phase and frequency of said generator, and means for switching the signal pulses to the last-mentioned means when the recording means is passing over said clamp and to said recording means when it is passing over the remaining surface of said drum.

RICHARD E. MATHES.
WARREN H. BLISS.