(19) Europäisches Patentamt
European Patent Office
Office européen des brevets

(11) EP 0 719 604 A1

(12) **EUROPEAN PATENT APPLICATION**

(43) Date of publication:
03.07.1996 Bulletin 1996/27

(51) Int. Cl.[6]: **B21F 1/00**

(21) Application number: **95830545.0**

(22) Date of filing: **29.12.1995**

(84) Designated Contracting States:
AT CH DE ES FR GB LI

(30) Priority: **30.12.1994 IT MI942686 U**

(71) Applicant: **OMD OFFICINA MECCANICA DOMASO S.p.A.**
I-22013 Domaso (Como) (IT)

(72) Inventor: **Kunz, Hans**
Via Statale 193, I-22013 Domaso (Como) (IT)

(74) Representative: **Cicogna, Franco**
Ufficio Internazionale Brevetti
Dott.Prof. Franco Cicogna
Via Visconti di Modrone, 14/A
20122 Milano (IT)

(54) **Wire guide for bending and twisting machines with improved wire engagement means**

(57) The present invention relates to a wire guide for bending and twisting machines, with improved wire engagement means (1), characterized in that the wire guide (3) comprises a wire guide body (2) which is rotatively supported and wire locking means (30) operating on the wire guide body (2) or immediately near an output wire guide body (2).

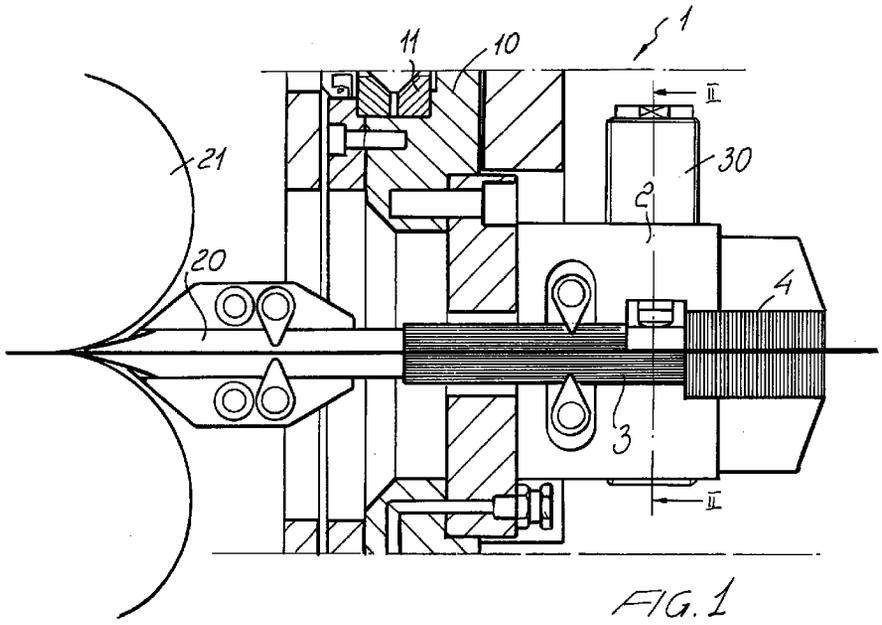

FIG. 1

EP 0 719 604 A1

Description

BACKGROUND OF THE INVENTION

The present invention relates to a wire guide for bending and twisting machines, including improved wire engagement means.

As is known, in wire bending and twisting machines, in which the wire is driven along a path extending from a rear inlet of the machine to a front outlet thereof, it is necessary, in order to properly bend or wind the wire, to use wire processing tools mounted on a twisting bar of the machine or on bending tool supporting slides thereof.

In locating the slides about a wire outlet point, are frequently formed offset arrangements, which prevent the bending tools from properly engaging the wire, because of a lacking of space between the slides.

In such a case, it is necessary to provide special slides or very complex tools which contribute to greatly increase the production cost of the machine.

SUMMARY OF THE INVENTION

Accordingly, the aim of the present invention is to overcome the above mentioned problems, by providing a wire guide for wire bending and twisting machines, which is so designed and arranged to greatly simplify the construction of the machine.

Within the scope of the above mentioned aim, a main object of the present invention is to provide such a wire guide which, by causing the wire or the machine bars to advance and turn about an axis thereof, provides the possibility of easily performing all of the desired bends or curved patterns.

Yet another object of the present invention is to provide such a wire guide which is very reliable and safe in operation, can be easily made starting from easily available elements and materials, and which, moreover, is very competitive from a mere economic standpoint.

According to one aspect of the present invention, the above mentioned aim and objects, as well as yet other objects, which will become more apparent hereinafter, are achieved by a wire guide for wire bending and twisting machines, including improved wire engagement means, characterized in that said wire guide comprises a wire guide body, rotatively supported so as to rotate about an axis thereof, and wire locking means, operating on said wire guide body or immediately near said wire guide body.

BRIEF DESCRIPTION OF THE DRAWINGS

Further characteristics and advantages of the invention will become more apparent hereinafter from the following detailed disclosure of a preferred, though not exclusive, embodiment of a wire guide for wire bending and twisting machines, with improved wire engagement means, which is illustrated, by way of an indicative, but not limitative example, in the accompanying drawings, where:

Figure 1 is a schematic cross-sectional view illustrating the wire guide according to the present invention; and

Figure 2 is a cross-sectional view substantially taken along the line II-II of Figure 1.

DESCRIPTION OF THE PREFERRED EMBODIMENTS

With reference to the number references of the above mentioned figures, the wire guide for wire bending and twisting machines, with improved wire engagement means, according to the present invention, which has been generally indicated by the reference number 1, comprises a supporting element 2 for supporting a rotatable wire guide 3, which is arranged axially of the body 2.

To the body 2 is coupled a hardened head 4 of the rotatable output wire guide 3; the wire guide 3 is coupled to a supporting flange 10, which is also designed for rotating, on ball bearing 11.

On the extension of the rotatable wire guide 3 is provided a fixed wire guide 20, arranged at wire entraining or driving rollers 21.

The main feature of the invention is that, in a rotatable wire guide body 3, are provided wire locking means, which are directly coupled to said wire guide, or are supported immediately near the wire guide, so as to allow to properly lock the wire and to cause it to turn by exploiting the rotary movement of the rotatable wire guide.

In operation, as the wire locking means are actuated, the wire guide and wire will be caused to turn, whereas the driving rollers are opened.

As the locking means are disengaged, the wire driving rollers will be closed, and the wire guide will rotate about the wire.

The possibility of turning the wire for a set angle and to return again to the starting position, allows to greatly simplify the bending equipment and to reduce to a minimum the number of bending units included therein, in particular as the pieces to be made are of complex shape.

In this connection it should be apparent that the wire can be locked in several suitable manners; only by example, it is herein shown a locking assembly which comprises a locking cylinder 30, operating on a lever 31 pivoted at one end thereof, and counter-urged by a return spring 32, to cause the lever to return to an unlocking position.

In operation, after having locked the wire by operating the lever 31, it will be possible to turn the wire about the axis thereof, and, accordingly, to work by bending tools at a normal position.

If desired, it is also possible to use different locking systems such as, for example, conical blocks arranged at the inlet of the wire into the outlet wire guide, which

will operate as a tool bearing mandrel, in order to clamp the wire.

In this connection it should be also apparent that, as already stated, the particular embodiment of the locking means can be subjected to any desired modifications.

From the above disclosure it should be apparent that the invention fully achieves the intended aim and objects.

In particular, it is pointed out that a wire guide has been provided which is very simple construction-wise, and is specifically designed for exploiting the rotatable wire guide body, in combination with wire locking means, to perform the desired rotary movement of the wire, which will simplify a lot of working operations.

The invention, as disclosed, is susceptible to several variations and modifications, all of which will come within the scope of the inventive idea.

Moreover, all of the details can be replaced by other technically equivalent elements.

In practicing the invention, the used materials, as well as the contingent size and shapes, can be any, depending on requirements.

Claims

1. A wire guide for wire bending and twisting machines, including improved wire engagement means, characterized in that said wire guide comprises a wire guide body, rotatively supported so as to rotate about an axis thereof, and wire locking means, operating on said wire guide body or immediately near said wire guide body.

2. A wire guide according to Claim 1, characterized in that the wire guide body is adapted to rotate for a set angle and then return to a starting position thereof.

3. A wire guide according to Claims 1 and 2, characterized in that said wire locking means are associated with the wire guide body.

4. A wire guide according to one or more of the preceding claims, characterized in that said wire locking means comprises a cylinder operating on a locking lever engageable with the wire and counterurged by a return spring.

5. A wire guide according to one or more of the preceding claims, characterized in that said wire locking means comprise conical blocks arranged at the wire inlet position in the wire guide body and adapted to be closed as a chuck.

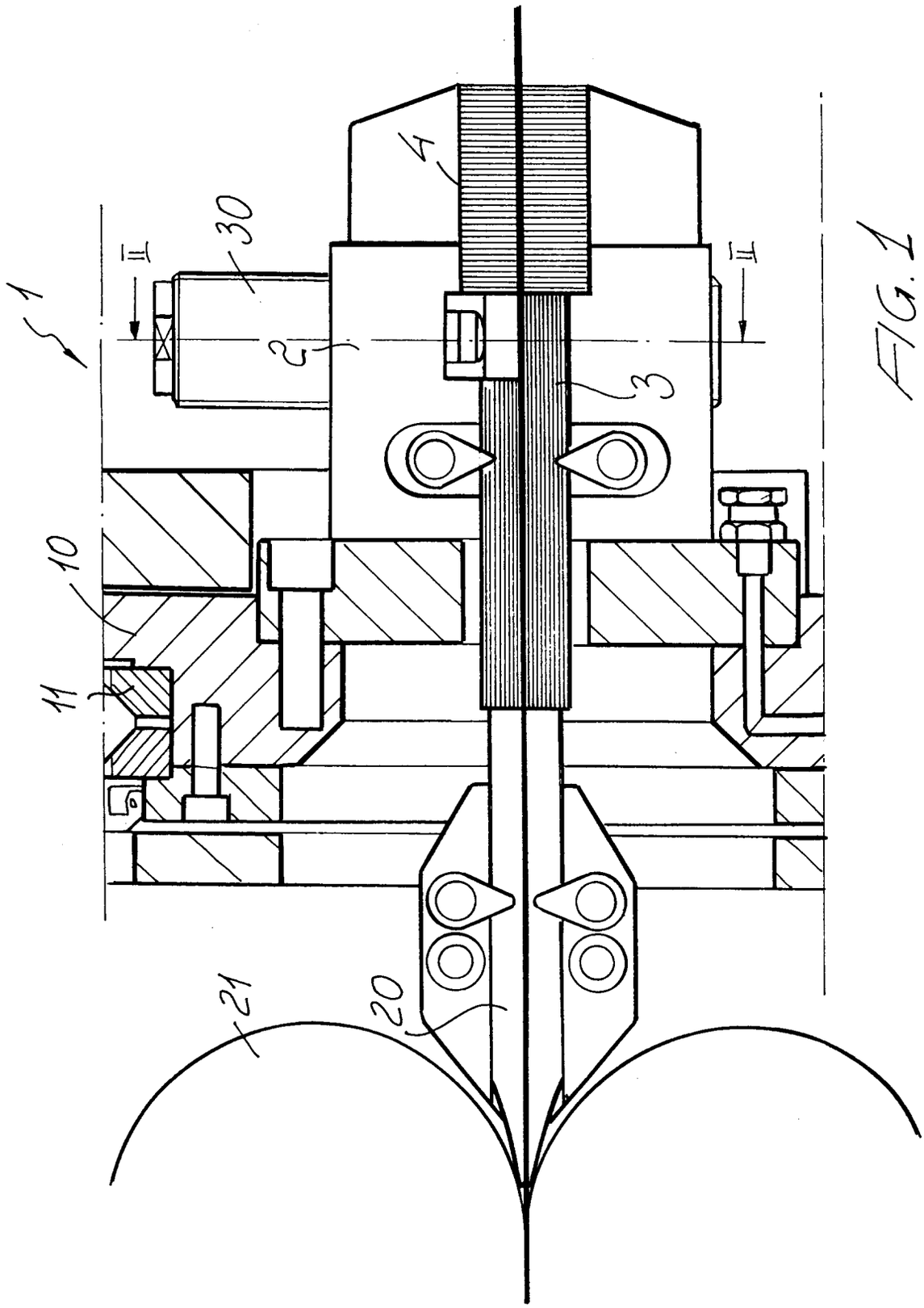

FIG. 1

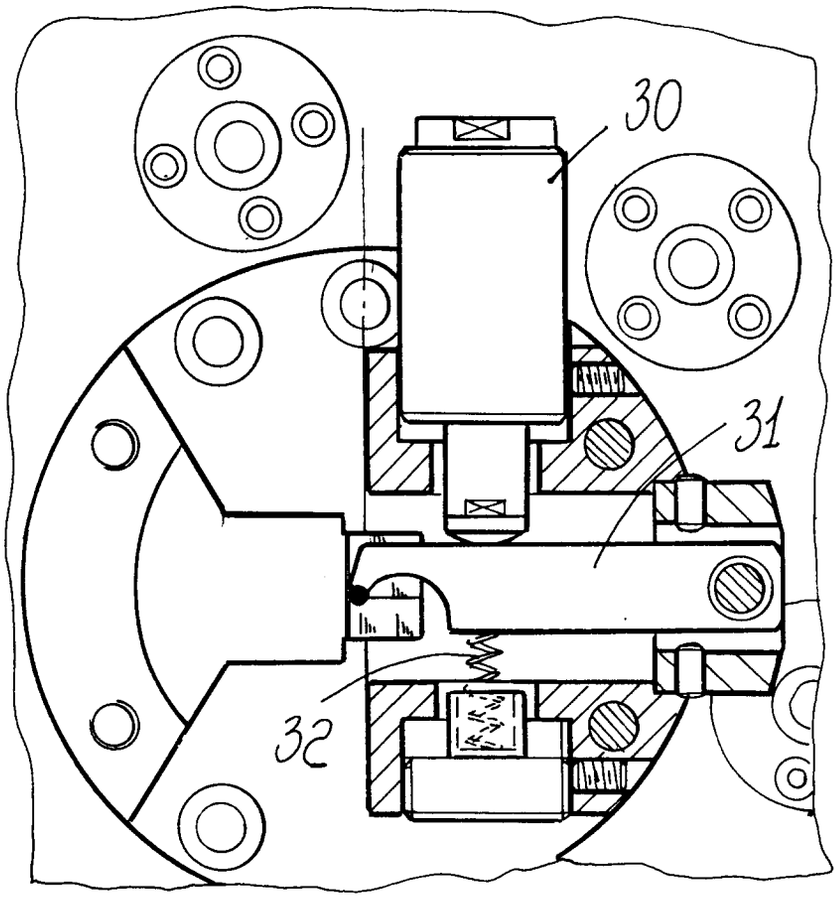

FIG. 2

European Patent Office

EUROPEAN SEARCH REPORT

Application Number
EP 95 83 0545

DOCUMENTS CONSIDERED TO BE RELEVANT

Category	Citation of document with indication, where appropriate, of relevant passages	Relevant to claim	CLASSIFICATION OF THE APPLICATION (Int.Cl.6)
X	EP-A-0 258 109 (LATOUR & FILS) * column 3, line 5 - line 40; figure 1 * ---	1,3	B21F1/00
X A	US-A-5 170 654 (ANAGNOSTOPOULOS) * claim 1; figures 1,2 * ---	1,3 4	
X A	FR-A-2 479 039 (OFFICINA MECCANICA MONTORFANO SNC) * page 9, line 19 - page 10, line 8 * * page 12, line 21 - page 13, line 2; figures 5,13,14 * ---	1-3 4	
A	US-A-3 821 525 (EATON) * column 3, line 35 - column 4, line 20; figure 1 * ---	1,5	
A	DE-C-42 29 294 (WAFIOS MASCHINENFABRIK GMBH) -----		

TECHNICAL FIELDS SEARCHED (Int.Cl.6)
B21F B21D

The present search report has been drawn up for all claims

Place of search	Date of completion of the search	Examiner
THE HAGUE	20 March 1996	Barrow, J

CATEGORY OF CITED DOCUMENTS

X : particularly relevant if taken alone
Y : particularly relevant if combined with another document of the same category
A : technological background
O : non-written disclosure
P : intermediate document

T : theory or principle underlying the invention
E : earlier patent document, but published on, or after the filing date
D : document cited in the application
L : document cited for other reasons

& : member of the same patent family, corresponding document

EPO FORM 1503 03.82 (P04C01)