Sept. 10, 1940. S. SCHECTER 2,214,480

STOVEPIPE CONSTRUCTION

Filed Aug. 5, 1939

Fig. 1

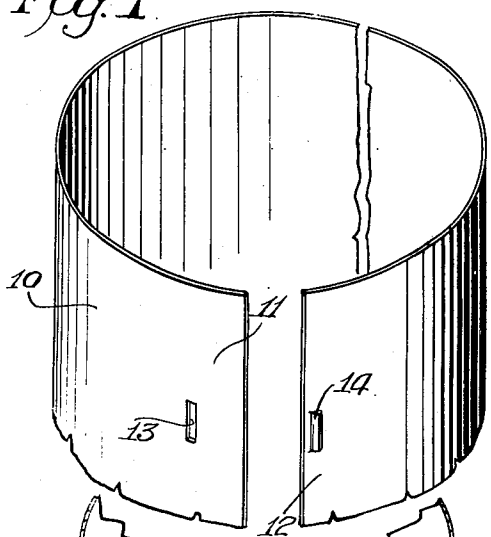

Fig. 2

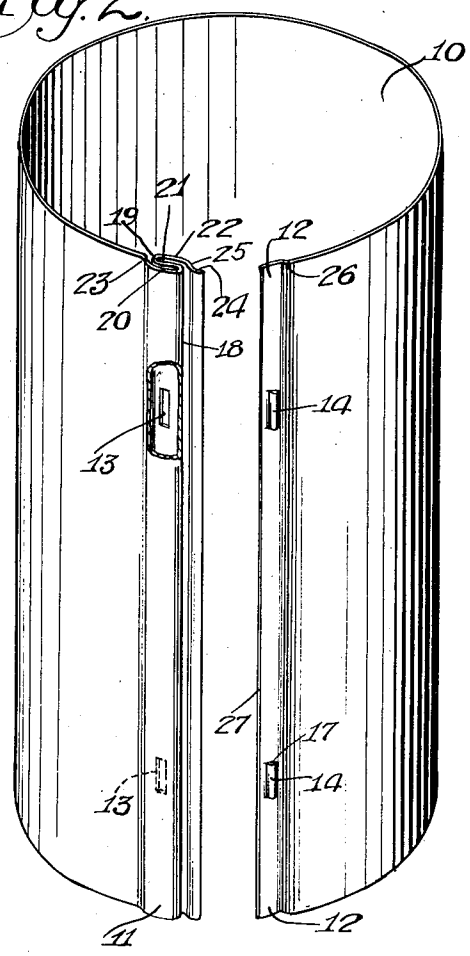

Fig. 3

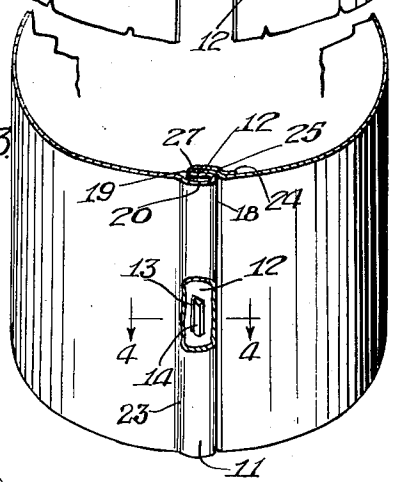

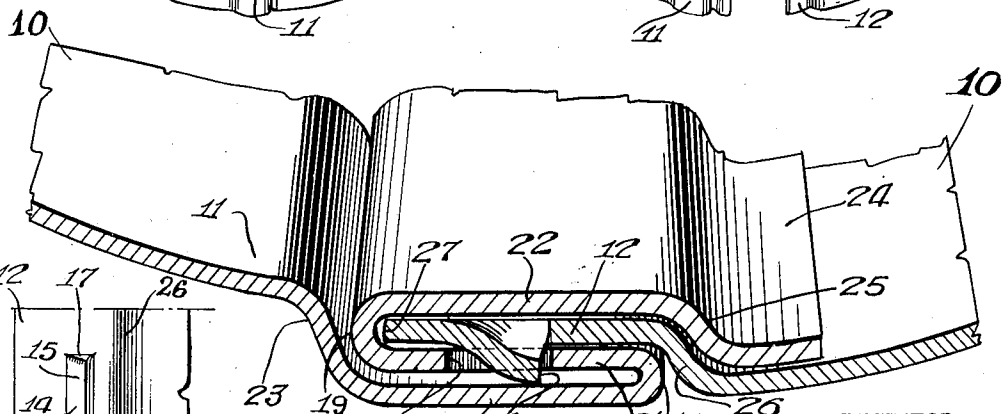

Fig. 4

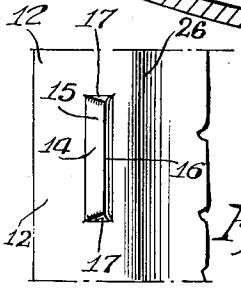

Fig. 5.

INVENTOR.
Samuel Schecter
BY
Leonard LaKalish
ATTORNEY.

Patented Sept. 10, 1940 2,214,480

UNITED STATES PATENT OFFICE

2,214,480

STOVEPIPE CONSTRUCTION

Samuel Schecter, Philadelphia, Pa.

Application August 5, 1939, Serial No. 288,484

1 Claim. (Cl. 138—74)

The present invention relates to stovepipes in general, and it relates more particularly to a novel stovepipe having an improved self-locking longitudinal seam.

One of the objects of the present invention is to provide an improved stovepipe having a more durable longitudinal seam which may be more effectively and more securely locked with ease, and which may yet be inexpensively produced.

Other objects of the present invention will appear more fully from the following detailed description, accompanying drawing and appended claim.

For the purpose of illustrating the invention, there is shown in the accompanying drawing one form thereof which is at present preferred, since the same has been found in practice to give satisfactory and reliable results, although it is to be understood that the various instrumentalities of which the invention consists can be variously arranged and organzied and that the invention is not limited to the precise arrangement and organization of the instrumentalities as herein shown and described.

Referring to the drawing, wherein like reference characters indicate like parts,

Figure 1 represents a fragmentary perspective view of a cylindrical blank of sheet metal from which may be formed the improved stovepipe forming the subject matter of the present invention.

Figure 2 represents a perspective view of an unclosed section of the improved stovepipe constructed from the blank illustrated in the preceding figure and having finished longitudinal marginal portions adapted for engagement with each other.

Figure 3 represents a fragmentary perspective view of a closed section of the stovepipe illustrated in Figure 2, with the longitudinal seam-forming marginal portions thereof being operatively locked together.

Figure 4 represents an enlarged sectional perspective view taken through an interlocked portion of the stovepipe seam, such as would be seen for instance on line 4—4 of Figure 3 looking in the direction of the arrows.

Figure 5 represents an enlarged front elevational view of one of the interlocking projections which are pressed out of one of the longitudinal marginal portions of the stovepipe.

In the particular embodiment of the present invention selected for illustration of the accompanying drawing, the stovepipe is constructed from a sheet-metal blank 10 bent into cylindrical form. The longitudinal marginal portions 11 and 12 of the blank 10 are respectively provided at longitudinally spaced intervals with rectangular apertures 13 and cooperating projections 14, pressed, stamped, bent or otherwise formed out of the sheet-metal blank. The apertures 13 are spaced somewhat further from the edges of the marginal portion 11 than are the projections 14 from the edge of the marginal portion 12, for a reason which will presently appear.

Each of the projections 14 extends radially outwardly, and preferably extends in a direction away from the adjacent marginal edge of the sheet-metal blank 10. In the particular embodiment illustrated in the drawing, the projections 14 each include an inclined generally trapezoidal surface 15 so proportioned relative to the rectangular aperture 13 as to fit more or less snugly therein, with the radially outermost edge 16 of said trapezoidal surface being slightly shorter than the corresponding major dimension of the aperture 13, to permit ready entry of the projection 14 into the aperture 13.

It will be noted that the projection 14 is severed from the sheet metal from which it is struck along one free edge 16, with the ends of the trapezoidal surface 15 being connected to the sheet metal blank 10 by means of the integral triangular-shaped end-panels 17 which are almost perpendicular to the plane of the sheet-metal 10. If desired, the projections 14 may be severed from the sheet-metal along three sides, in lieu of merely along the one side shown. In either case, however, edge 16 constitutes an abrupt well-defined portion which will readily slip into the recess 13 to lock together the marginal portions 11 and 12;—separation being prohibited by the edge of projection 14 encountering the juxtaposed edge of the aperture 13.

The marginal portion 11 containing the apertures 13 is twice folded in upon itself along the fold lines 18 and 19, to provide the three juxtaposed plies 20, 21 and 22, with fold 19 not being quite as sharp as fold 18, so that the plies 22 and 21 are spaced somewhat further apart than are the plies 21 and 20, thereby to provide space therebetween for receiving the opposite marginal portion 12.

The radially-outermost ply 20 is preferably offset radially outwardly from the body of the stovepipe with the inclined connecting portion 23 following as far as possible the curved contour of the underlying fold 19. The radially-innermost ply 22 preferably terminates a substantial distance beyond the fold 18 in a radially-out-

wardly offset terminal portion 24 with the inclined connecting portion 25 approximating the curve of the spaced fold 18.

The opposite projection-bearing marginal portion 12 is offset radially inwardly with respect to the body of the stovepipe, with the inclined intervening portion 26 being bent to fit more or less snugly between the fold 18 and the radially inwardly spaced inclined portion 25.

After the marginal portions have been bent as above described, the resultant stovepipe resembles that illustrated in Figure 2, with the projection-receiving apertures 13 being located along the intermediate marginal ply 21 and being completely concealed by the juxtaposed inner and outer plies 22 and 20, respectively.

The longitudinal marginal portions of the blank 10 may be readily permanently interlocked by merely inserting the edge 27 of the right-hand marginal portion 12 intermediate the juxtaposed plies 21 and 22 of the left-hand marginal portion 11, and then sliding portion 12 home, where it assumes the position illustrated in Figure 4. During this sliding movement the panels 21 and 22 will be sprung slightly apart until the sharp edge 16 of the locking projection 14 has cleared the trailing edge of the aperture 13 and the inclined portion 26 has nested within the juxtaposed inclined portion 25, whereupon the plies 21 and 22 will spring back substantially to their former positions, snapping the projections 14 into their cooperating concealed apertures 13.

The resultant longitudinal seam is extremely durable, possessing great structural strength, and the marginal portions forming said seam are permanently interlocked in an extremely effective manner, and without the presence of visible securement means. Thus, the interlocked marginal portions 11 and 12 are secured against separating transverse movement by virtue of the free edge 16 of the projection 14 abutting the adjacent juxtaposed edge of the aperture 13, and relative longitudinal shifting of the interlocked marginal portions 11 and 12 is prohibited by the presence of the outwardly extending triangular end portions 17 on the projections 14, which encounter the immediately adjacent juxtaposed short edges of the apertures 13.

It will also be noted that when the marginal portions 11 and 12 are operatively locked together, the leading edge 27 of the right-hand marginal portion 12 substantially abuts against the fold 19 of the left-hand marginal portion 11, thereby limiting further movement in a seam-closing direction.

By virtue of the foregoing construction, an improved stovepipe is afforded wherein movement of the interlocked portions comprising the longitudinal seam is prohibited in all directions, by juxtaposed well-defined edges and/or surfaces which cannot slide or work their way past each other, and all this is achieved in a relatively simple and inexpensive manner, and by concealed means which do not project beyond the seam either interiorly or exteriorly thereof.

The present invention may be embodied in other specific forms without departing from the spirit or essential attributes thereof, and it is therefore desired that the present embodiment be considered in all respects as illustrative and not restrictive, reference being had to the appended claim rather than to the foregoing description to indicate the scope of the invention.

Having thus described the invention, what is hereby claimed as new and desired to be secured by Letters Patent is:

In a sheet-metal stovepipe having two meeting longitudinal marginal portions, one of which marginal portions is twice folded upon itself to provide three overlapped plies with the outermost and innermost plies imperforate, and the other marginal portion projecting between the innermost and the intermediate of said three overlapped plies, means for locking said other marginal portion between said innermost and intermediate overlapped plies, said locking means including a plurality of longitudinally spaced outwardly-extending projections on said second marginal portion terminating in free-cut longitudinal edges and being generally elongated and having generally abrupt un-cut end-shoulders, corresponding apertures in said intermediate ply in registration with said outwardly extending projections and adapted fully to receive and house said projections, said apertures having longitudinal edges in interlocking relation to the free-cut edges of said projections and having end edges in interlocking relation to said end shoulders of said projections; said innermost ply and said other marginal portion being similarly offset to form corresponding generally continuous interlocking longitudinal shoulders.

SAMUEL SCHECTER.