Oct. 20, 1970 R. HORSCH 3,534,881

LINKAGE FOR POSITIONING LOADER BUCKET

Filed Aug. 6, 1968 2 Sheets-Sheet 1

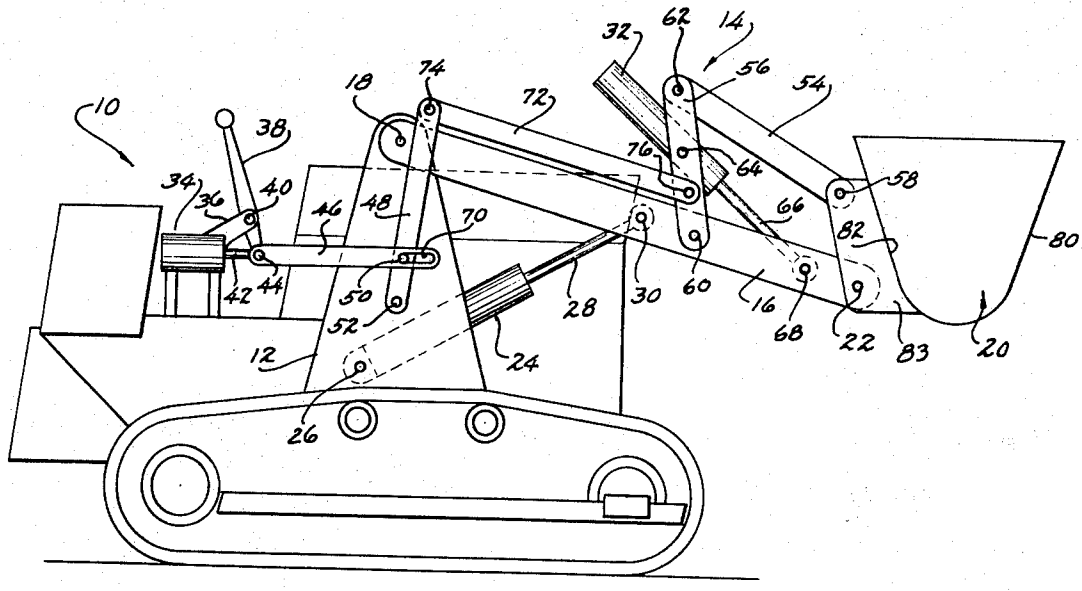

FIG. 1

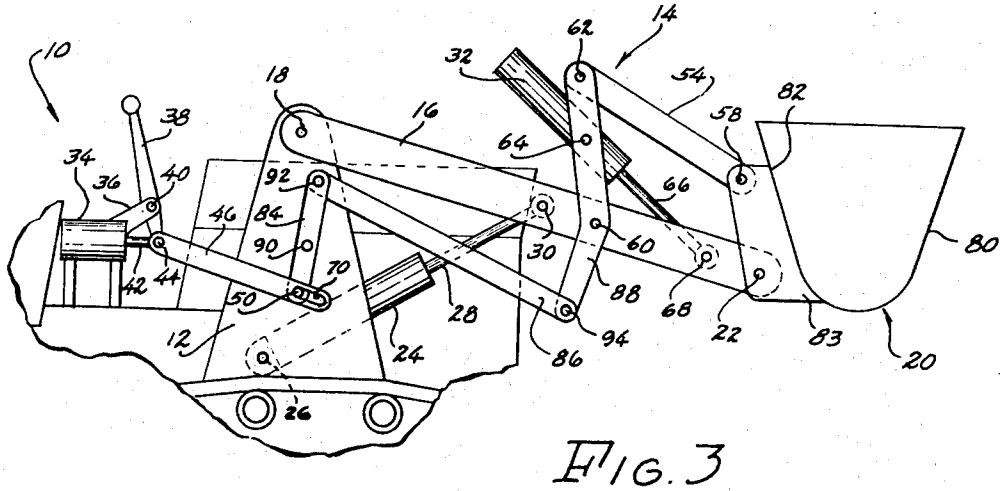

FIG. 3

INVENTOR
RUDOLF HORSCH
BY Dressler, Goldsmith, Clement & Gordon
ATT'YS

Oct. 20, 1970 R. HORSCH 3,534,881

LINKAGE FOR POSITIONING LOADER BUCKET

Filed Aug. 6, 1968 2 Sheets-Sheet 2

FIG. 2

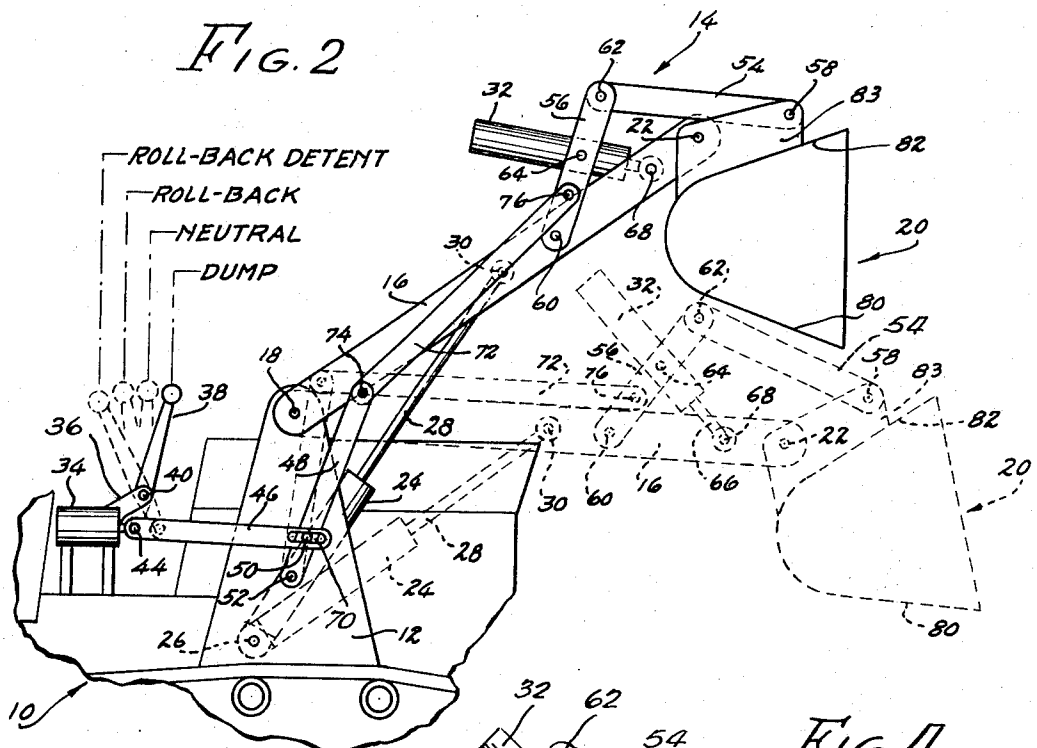

FIG. 4

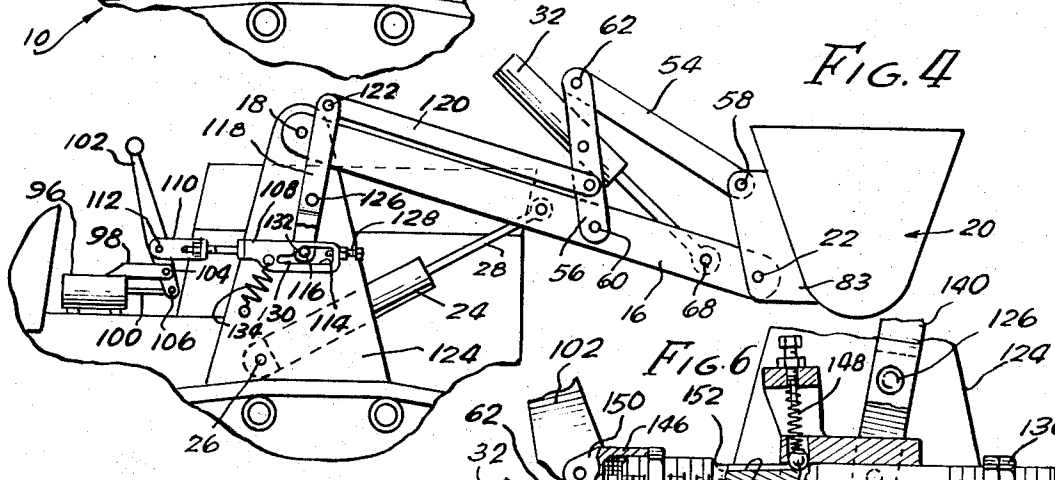

FIG. 6

FIG. 5

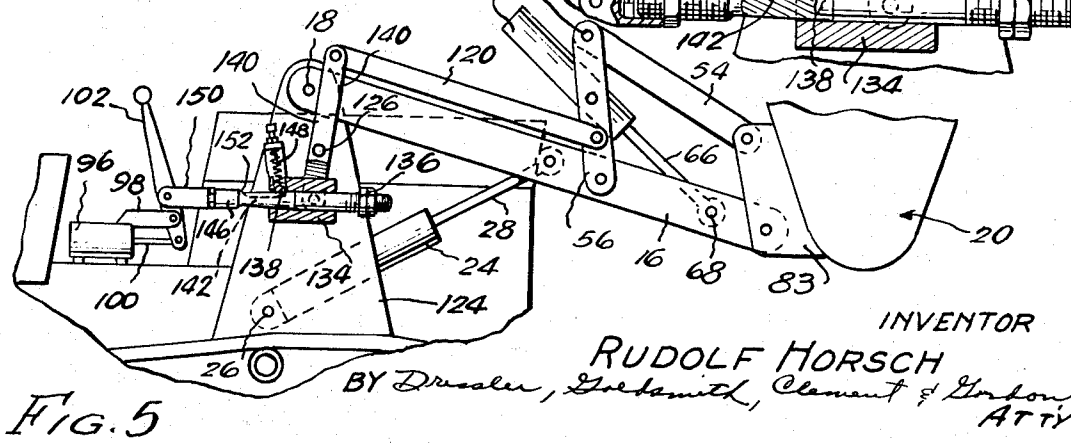

INVENTOR
RUDOLF HORSCH
BY Dressler, Goldsmith, Clement & Gordon
ATTYS

United States Patent Office 3,534,881 Patented Oct. 20, 1970

3,534,881

LINKAGE FOR POSITIONING LOADER BUCKET

Rudolf Horsch, Burlington, Iowa, assignor to J. I. Case Company, a corporation of Wisconsin

Continuation-in-part of application Ser. No. 662,065, Aug. 21, 1967. This application Aug. 6, 1968, Ser. No. 750,694

Int. Cl. E02f 3/70

U.S. Cl. 214—762 14 Claims

ABSTRACT OF THE DISCLOSURE

A control arrangement is disclosed for a tractor-mounted loader including lift and bucket cylinders, a linkage connecting the cylinders to the tractor and to the bucket, and a control valve for operating the cylinders and the linkage. The linkage includes lost motion means connected to the control valve for maintaining the bucket in a desired position when the bucket is raised and lowered in relation to the ground.

This application is a continuation-in-part of my prior copending application Ser. No. 662,065, filed Aug. 21, 1967, now abandoned.

BACKGROUND OF THE INVENTION

A material-moving device carried on a vehicle with means for raising and lowering the device has been in use for a number of years. The device is usually in the form of a bucket, and lift arms are pivotally connected to the vehicle and to the bucket for placing the bucket in the proper position for filling the bucket, for transporting the filled bucket, and for dumping the material from the bucket at another location. A hydraulic system comprising a pressurized fluid supply, hydraulic pumps and control valves are employed to move and position the bucket in the proper attitude. The lift arms are controlled by lift cylinders pivotally connected to the vehicle and to the arms, and the bucket is controlled by bucket cylinders pivotally connected to the lift arms and to the bucket. Additional mechanisms, including levers, valves, and the like, have been incorporated into the control system to keep the bucket in the positions for the filling, transporting, and dumping operations. These functions are commonly termed "self-leveling," "return to dig," and the like, which terms indicate the attitude of the bucket in its travel during the various operations. The prior art shows various control systems which accomplish some of these functions by means of special valves, cylinders, or the like, and thus require complicated arrangements. It is important in the operation of a mobile loader that the vehicle operator devote much of his time to controlling the vehicle because of the speed of the operations. Therefore, mechanical or electrical devices have to be utilized for much of the bucket operation. These mobile loaders have had a number of manually operated levers, pedals, and the like, to direct the bucket in its travel. Simpler and more dependable means are constantly being sought to perform the various functions.

SUMMARY OF THE INVENTION

The present invention relates to tractor-mounted loaders, and more particularly to the control system including linkages for positioning the bucket at the proper and desired attitudes. The structure of this invention includes lift cylinders, bucket cylinders, a control valve and control links for self-leveling, anti-rollback, and return to dig functions.

The self-leveling feature is desired when the bucket is filled, and when the bucket is raised to the transport or

elevated position, it is kept level to prevent the material from spilling. It is, of course, advantageous to move the maximum amount of material on each trip, and is especially important to prevent spillage of material from the elevated bucket onto the vehicle, or the operator.

At the elevated position of the filled bucket, it is also a requirement that the bucket be tipped or tilted forwardly to dump the material. A feature of the present invention is provision for preventing rollback of the elevated bucket so that the material will not be dumped rearwardly on the vehicle or the operator.

A third feature of the present invention provides for positioning the bucket at the proper attitude when it is lowered, so that it is ready for digging when it reaches ground level.

These important features are accomplished by means of a linkage which is applied to a conventional loader having a control valve and lift and bucket cylinders. The linkage includes members connected to the vehicle, the bucket, the lift arms, the cylinders and the control valve to perform the desired functions.

An important advantage of this linkage arrangement is its adaptability to a tractor loader for accomplishing the leveling, anti-rollback and return to dig functions. The linkage is so designed in relation to the tractor, the bucket, and the hydraulic system that the bucket is automatically maintained at the desired position. The links are positioned and are pivotally interconnected so that, with the addition of a lost motion connection, the bucket assumes the correct attitude in its up and down travel. Other features and advantages of the invention will become apparent from a reading of the following description taken together with the annexed drawings, in which:

FIG. 1 shows a side elevational view of a tractor incorporating one embodiment of the invention;

FIG. 2 is a fragmentary side elevational view showing in solid lines the bucket in a dump position, and in dotted lines the bucket in a return to dig attitude;

FIGS. 3, 4, and 5 are fragmentary side elevational views showing other embodiments of the invention; and

FIG. 6 is an enlarged fragmentary side view, partly in section and partly in elevation, showing the lost motion mechanism.

The present invention is an improved linkage control arrangement for a tractor-mounted loader wherein the linkage, as stated, is designed to accomplish several desirable features. The arrangement minimizes the number of hydraulic apparatus and, by reason of the particular design, automatically positions the bucket, thus enabling the operator to give more attention to the operation of the tractor. The linkage provides the features, as mentioned above, and accomplishes the functions through structure which will now be described.

In FIG. 1, there is shown a tractor **10** having an upright support **12** supporting a loader assembly **14**. The assembly includes a lift arm **16** pivotally supported at one end thereof on the support **12** by means of a pivot pin **18**. The lift arm **16** carries a bucket **20** pivotally supported at the other end of the arm by means of a pin **22**.

A hydraulic cylinder **24** is utilized to raise and lower the lift arm, the cylinder portion being pivotally connected to the support **12** by a pin **26**, and the rod **28** being connected to the lift arm **16** by a pin **30**. It is, of course, understood that the specific embodiment includes two supports **12**, two lift arms **16**, and two lift cylinders **24**. However, for purposes of simplicity, only one is shown. A bucket cylinder **32** is utilized for tilting the bucket **20**. The structure may have two tilt cylinders **32**. However, only one cylinder is necessary if the pivot pins are extended between the lift arms.

A control valve **34** is supported on the tractor **10** and includes an arm **36**, a control handle **38** pivoted on the

arm by a pin 40, and a valve spool link 42. The handle 38 also is connected to the link 42 by a pin 44. The control valve 34 is conventional, as are the hydraulic cylinders 24 and 32, and it is understood that a suitable pressurized hydraulic fluid is available for controlling and driving the cylinders.

A first or rear linkage includes a link 46 connected with a link 48. One end of link 46 is pivoted to the handle 38 at 44, and the other end is connected to the link 48 by a pin 50. One end of the link 48 is pivotally connected to the support 12 by a pin 52, and the other end is freely movable in a defined path.

A second or forward linkage includes a pair of pivotally interconnected links 54 and 56. The link 54 is connected to the bucket 20 by a pin 58, and the link 56 is connected to the lift arm 16 by a pin 60. The free ends of the links 54 and 56 are pivotally connected to each other at 62. The hydraulic cylinder 32 is pivotally connected to the link 56 at 64, and its rod 66 is connected to the lift arm 16 by a pin 68.

A slot 70 is defined in one end of the link 46, and the pin 50, which is fixed to the link 48, rides in this slot. The interengagement of the pin 50 and slot 70 constitutes a lost motion connection that permits the bucket 20 to remain level as the lift arms 16 are raised, prevents the bucket from rollback in its raised position, and permits the bucket to assume its proper inclination for digging as it is lowered. An intermediate link 72 is connected to the free end of the link 48 by a pin 74, and is also connected to the link 56 by a pin 76. The pin 76 is located between the pins 60 and 64.

In FIG. 2, the loader assembly 14 is shown in the dump position in solid lines, and in a digging attitude in dotted lines. The bucket 20 includes a bottom portion 80, a rear portion 82, and a support structure 83.

Also seen in FIG. 2, the control valve 34 is provided with at least three positions for directing the flow of fluid, in addition to the neutral position. One of these positions is the rollback position which is utilized in initially moving the bucket in a counterclockwise direction, as viewed in FIG. 2, when the bucket is filled and prior to raising. Another is the dump position which is for the purpose of moving the bucket in a clockwise direction when the bucket is in the raised position. A third position is the rollback detent wherein handle 38 is moved rearwardly and the bucket moves counterclockwise from the dump position and is readied for return to dig.

When the bucket 20 is in the digging attitude, the portion 80 of the bucket is generally parallel with the ground surface, and the tractor is driven forward to fill the bucket. When the bucket is filled, it is rolled or tilted rearwardly by the cylinder 32 prior to raising of the lift arms, so that all the material remains in the bucket as the tractor is backed away from the material pile.

As the lift arms 16 and the bucket 20 are raised for transporting the load to another location, the bucket has to be kept level to avoid spilling the contents. As is known, when the bucket is in the rollback position and then is raised, it will stay in that position, and the counterclockwise movement may cause some of the contents to spill over bucket portion 82, unless the bucket is moved clockwise as it is raised to compensate for the inclination of the bucket caused by the pivotal movement of the lift arm 16 about its pivot 18.

The linkage, the pivot points, and the control valve positions accommodate the break-out or rollback function, the automatic leveling of the bucket as it is raised, the dumping of the bucket when in the raised position, and the conditioning of the bucket as it is being lowered to the return to dig position.

The sequence of operation with the structure shown in FIGS. 1 and 2 is that, when in the digging position, the portion 80 of bucket 20 is at ground level for filling the bucket as the tractor is driven into a pile of material. In the dig position, the rod 28 is in a retracted relationship in the lift cylinder 24, and the rod 66 is in a retracted relationship from the bucket cylinder 32. In this position of the bucket, the pin 50 is located in the forward portion of the slot 70. The filled bucket is rolled back by moving the handle 38 into the rollback position. The rearward movement of the handle 38 into the rollback position moves the link 46 forwardly and also actuates the control valve to direct hydraulic fluid to the piston side of the bucket cylinder 32, thus extending the cylinder 32. The link 56, which is connected to the cylinder 32 at 64, is moved rearwardly about the pivot 60 by extension of the cylinder 32. The link 56 pulls the link 54 rearwardly to roll the bucket back, and also moves the link 72 rearwardly at the same time. The rearward movement of the link 72 moves the pin 50 rearwardly in the slot 70. The slot 70 permits the pin 50 to move rearwardly as the link 46 is moved forwardly.

After the bucket is rolled back, it is raised by introducing fluid into the piston side of the cylinder 24. The fluid flowing into the piston side of the cylinder 24 moves the rod 28 outwardly, thereby raising the lift arm 16 about its pivot 18. The lift arm 16 moves the links 56 and 72 upwardly as it is raised. The location of the pivot 18 causes the link 72 to move rearwardly as it is moved upwardly, thus moving the link 48 counterclockwise about its pivot 52. The counterclockwise movement of the link 48 forces the pin 50 against the rear end of the slot 70 and moves the link 46 rearwardly.

If the bucket is in level position, the pin 50 remains in engagement with the rear end of the slot 70 throughout raising of the loader, thus preventing actuation of the valve spool to rollback the bucket beyond level position. The handle 38 cannot be pulled rearwardly inadvertently while the pin is at the rear end of the slot. If the handle were moved rearwardly, it would move the bucket in a counterclockwise direction and spill its contents on the tractor, and possibly on the operator.

The rearward movement of the link 46 forces the handle 38 out of the rollback position and moves it toward the dump position. The movement of the handle toward the dump position directs fluid into the rod side of the cylinder 32, thereby tending to collapse the cylinder 32. The collapsing movement of the cylinder 32 moves the link 56 forwardly about its pivot 60. The link 56 moves the link 54 forwardly and the bucket clockwise to level it. The lost motion slot permits the pin 50 to move forwardly as the bucket is leveled.

As shown in FIG. 2, the bucket is dumped by moving the handle 38 forwardly to the dump position, thereby continuing the flow of fluid into the rod side of the cylinder 32 until the cylinder is collapsed. The collapsing movement of the cylinder continues the movement of the link 56 forwardly about its pivot 60, and the link 54 continues to move the bucket clockwise until it dumps its contents. The forward movement of the handle 38 also moves the link 46 rearwardly and locates the pin 50 toward the forward end of the slot 70.

The return to dig is accomplished by moving the handle 38 rearwardly through the neutral and into the rollback detent position, thereby moving the link 46 forwardly. The bucket is then lowered by directing fluid into the rod side of the cylinder 24. The bucket must be moved counterclockwise from its dump position as it is being lowered, to place it in its digging position. The counterclockwise movement of the bucket causes the pin 50 to push against the rear end of the slot 70 and move the link 46 rearwardly. As the bucket is lowered, the rearward movement of the link 46 kicks the valve spool out of detent into the neutral position, thus placing the bucket in digging position.

In FIG. 3, is shown a variation of the linkage structure. However, the cylinders and valve are similar to those described above. Also, the links 46 and 54 may be utilized in this embodiment, the link 46 having the pin

50 in the slot 70. The linkage connecting the links 46 and 54 are shown as links 84, 86 and 88. The link 84 is pivotally connected to the support 12 by means of a pin 90 which is located upwardly of the pin 50. The link 88 extends downwardly of lift arm 16, and the link 86 is pivotally connected to the links 84 and 88 by the pins 92 and 94, respectively. The difference in the embodiments represents a change in design and not function in that the pivots are selected wherein the link 72 moves in one direction when positioning the bucket in FIG. 1, and the link 86 moves in the opposite direction when similarly positioning the bucket in FIG. 3. This is a design wherein the feedback linkage shown in FIG. 3 is reversed from that shown in FIG. 1, the feedback linkage operating in essentially the same manner.

In both of the embodiments of FIGS. 1 and 3, the bucket 20 is leveled, as it is being raised, by directing fluid into the rod side of the cylinder 32 and thus moving the cylinder toward collapsed position. In the FIG. 1 structure, the collapsing movement of the cylinder 32 moves the link 56 clockwise to cause the link 54 to move the bucket 20 clockwise to level it. In the FIG. 3 structure, the collapsing movement of the cylinder 32 moves the lever 88 clockwise about its pivot 60 to cause the link 54 to move the bucket 20 clockwise.

The spatial relationship of the pivots 74 and 18 in the FIG. 1 structure causes the link 72 to be moved rearwardly and the link 48 to be moved counterclockwise about its pivot 52 as the lift arm 16 is moved counterclockwise about its pivot 18. In the FIG. 3 structure, the spatial relationship between the pivots 92 and 18 causes the link 86 to be moved forwardly and the link 84 to be moved clockwise about its pivot 90 as the lift arm 16 is moved counterclockwise about its pivot 18. The counterclockwise movement of the link 48 and the clockwise movement of the link 84 each cause the pin 50 to push the link 46 rearwardly, thus moving the spool link 42 into the cylinder 34.

In the embodiment of FIG. 4, the structure is siimlar to the structure of the embodiments described above, except that the structure and arrangement of the rear linkage is different. Identical structure is designated by the same reference numerals used in FIG. 1. In FIG. 4, the control valve 96 has an arm 98 and a valve spool link 100 projecting therefrom. A handle 102 is pivotally connected to the arm 98 by a pin 104 and to the outer end of the link 100 by a pin 106. A link 108 is secured to the handle 102 by an adjustable yoke 110 that is pivoted to the handle above the pin 104 as indicated at 112. The link 108 has a slot 114 in which a pin 116 rides. The pin 116 projects from the lower end of a link 118 that is pivoted at its upper end to a link 120, as indicated at 122. The link 118 is pivoted to a support 124 by a pin 126 intermediate the pins 122 and 116.

An adjusting screw 128, threaded into the end of the link 108 remote from the handle 102, projects into the slot 114. The screw 128 regulates the leveling of the bucket 20. As the lift arm 16 raises, the counterclockwise movement of the link 118 about its pivot 126 moves the pin 116 into engagement with the end of the screw 128 and operates the valve spool link 100 to direct fluid into the rod side of the cylinder 32 to keep the bucket 20 level in the same manner as in the embodiment of FIG. 1.

The slot 114 has an extension 130 adjacent its bottom. An internal shoulder 132 depending from the top of the slot 114 provides a stop for the pin 116 as the arm 16 moves downwardly to lower the bucket. The pin 116 strikes the shoulder 132 and actuates the valve spool link 100 in the direction of the bucket rollback to return the bucket to dig position. A spring 134 secured to the support 124 urges the link 108 downwardly to insure engagement of the shoulder 132 by the pin 116. If it is desired to tilt the bucket forward to dozing position, the handle is moved forward causing the pin 116 to override the shoulder 132 and enter the extension 130 to allow the necessary actuation of the spool link 100. The relative position of the shoulder 132 determines the point at which the return to dig occurs, and the position of the shoulder may be changed by adjustment of the yoke 110. The screw 128 may be adjusted to change the starting point of the movement of the spool link 100 to level the bucket.

The embodiment of FIGS. 5 and 6 is very similar to that of FIG. 4, and identical structure is designated by the same reference numerals. In the structure of FIGS. 5 and 6, an adjustable nut screw 136 is engaged by a trunnion block 134 pivotally secured to the lower end of the link 140 to actuate the spool link 100 to direct fluid into the rod side of the cylinder 32 to level the bucket as it is being raised.

A detent ball 138 is urged downwardly into a recess 142 on top of a link 146 by a spring 148 secured to the support 124. The link 146 is slidably mounted in the trunnion block 134 and has one end secured to an adjustable yoke 150. The recess 142 has a shoulder 152 at one end that can be moved by adjusting the yoke 150. When the detent ball strikes the shoulder 152, the link 146 actuates the spool link 100 to the rollback position to return the bucket to dig position. If the bucket is to be placed in dozing position, the detent ball can override the shoulder 152 and moves along the link 146, thus allowing actuation of the spool link 100 to move the bucket into dozing position.

It is thus seen that herein shown and described is a linkage and control system for a tractor loader which utilizes lift and bucket cylinders and a control valve for leveling the bucket and preventing rollback as it is raised, and positioning the bucket for digging as it is lowered.

While four embodiments have been shown and described, variations may occur to those skilled in the art. It is to be understood that all such variations are contemplated as being within the scope of the invention. The invention is not intended to be taken as limited by the embodiments disclosed, nor, in fact, in any manner except as defined in the following claims.

What is claimed is:

1. In a tractor-mounted loader having upstanding supports, lift arms pivotally connected to said supports, a bucket pivotally carried by said lift arms, and means for controlling the attitude of said bucket including means for raising and lowering said lift arms, hydraulic means for tilting said bucket in a fore-and-aft direction, a control valve for operating said hydraulic means, and linkage means interconnecting said control valve and said bucket and responsive to the position of said bucket and said lift arms when said lift arms are raised to automatically operate said control valve to maintain the bucket in a level position as it is raised and to automatically prevent rollback of the bucket in the raised position, and responsive to the position of said bucket and said lift arms when said lift arms are lowered to operate said control valve to automatically return said bucket to the digging attitude when it is lowered.

2. In a tractor-mounted loader having upstanding supports, lift arms pivotally connected to said supports, a bucket pivotally carried by said lift arms, and means for controlling the attitude of said bucket including means for raising and lowering said lift arms, hydraulic means for tilting said bucket in a fore-and-aft direction, a control valve for operating said hydraulic means, and linkage means interconnecting said control valve and said bucket for automatically maintaining the bucket in a level position as it is raised, for automatically preventing rollback of the bucket in the raised position, and for automatically returning said bucket to the digging attitude when it is lowered, said linkage means including a first linkage pivotally connected to said supports and to said control valve, a second linkage pivotally connected to said bucket, to said lift arms, and to said hydraulic

means, and an intermediate linkage interconnecting said first and second mentioned linkages.

3. In a loader in accordance with claim 2 wherein said first linkage includes a lost motion connection permitting travel of said tilting means in only one direction in one position of said bucket.

4. In a loader in accordance with claim 2 wherein said intermediate linkage is connected to said second linkage by a pin located below said lift arms in all positions of said lift arms.

5. In a loader in accordance with claim 2 wherein said intermediate linkage is connected to said second linkage by a pin located above said lift arms in all positions of said lift arms.

6. A linkage for automatically positioning a bucket on a vehicle having upstanding supports, lift arms pivotally connected to the supports, means for raising and lowering the lift arms and the bucket, hydraulic means for tilting the bucket, and a control valve for operating said hydraulic means, said linkage including a first link pivotally connected to said bucket, a second link pivotally connected to said first link, to said lift arms and to said hydraulic means, a third link pivotally connected to said second link, a fourth link pivotally connected to said third link and to one of said supports, and a fifth link pivotally connected to said fourth link and to said control valve, said fourth and fifth links including lost motion means operable to actuate said control valve for leveling the bucket as said lift arms are raised, for preventing rollback of the bucket beyond level position throughout raising cycle of said lift arms, and for returning the bucket to dig position as said lift arms are lowered.

7. A linkage in accordance with claim 6 wherein said lost motion means comprises a slot in said fifth link and a pin projecting from said fourth link into said slot below the pivotal connection between said fourth link and said support.

8. A linkage in accordance with claim 6 wherein said lost motion means comprises a slot adjacent one end of said fifth link and a pin projecting from said fourth link intermediate the pivotal connections of said fourth link with said third link and with said support, said pin being operable in said slot.

9. A linkage in accordance with claim 6 wherein said lost motion means comprises a slot adjacent one end of said fifth link and a pin projecting from said fourth link below both the pivotal connections of said fourth link with said third link and with said support, said pin being operable in said slot.

10. A linkage in accordance with claim 7 and having an adjustable stop extending into said slot for engagement by said pin to vary the actuation of said control valve for tilting said bucket forward as said lift arms are raised.

11. A linkage in accordance with claim 7 and having an internal shoulder in said slot for engagement with said pin to actuate said control valve to return said bucket to dig position as said lift arms are lowered and an extension beyond said shoulder permitting movement of said pin into engagement with the end of said extension to allow actuation of said control valve to position said bucket in dozing position.

12. A linkage in accordance with claim 6 wherein said lost motion means includes a block connected to said fourth link and slidable on said fifth link between first and second adjustable stops.

13. A linkage according to claim 12 wherein said fifth link includes a detent groove having a shoulder operative as one of said stops, and said block includes a member engageable with said detent shoulder for actuating said control valve to tilt said bucket rearward as said lift arms are lowered.

14. A linkage in accordance with claim 13 wherein said member is resiliently engaged in said detent groove to allow for override operation of said valve to tilt said bucket forward into dozing position.

References Cited

UNITED STATES PATENTS

3,204,794	9/1965	Washbond	214—762
3,402,840	9/1968	Goth	214—746

HUGO O. SCHULZ, Primary Examiner