May 31, 1966 K. L. BJORN-LARSEN 3,253,599

PANTY GIRDLE AND STOCKING SUPPORT

Filed Dec. 23, 1963 2 Sheets-Sheet 1

FIG. 1.

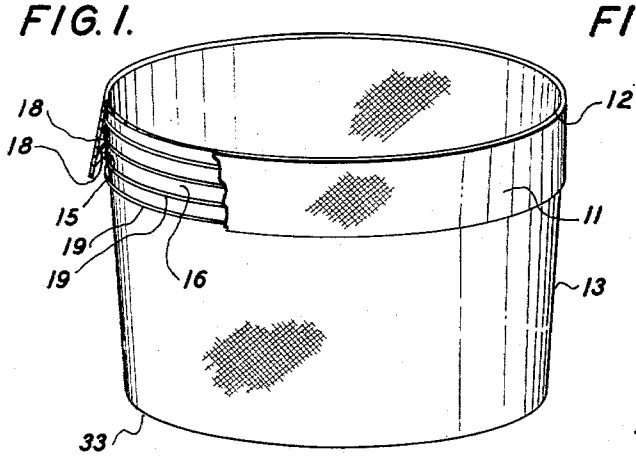

FIG. 2.

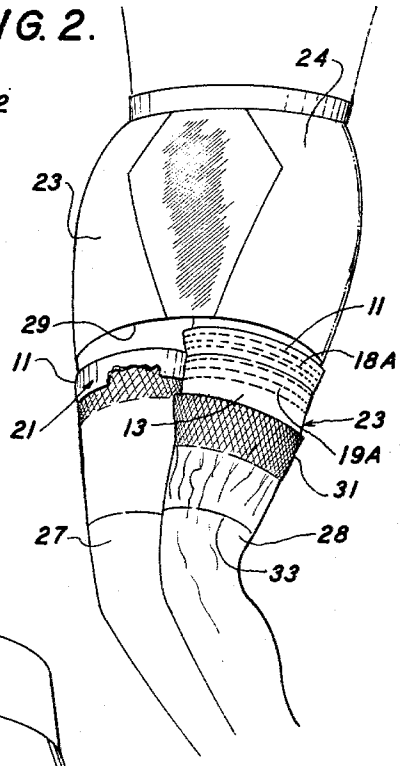

FIG. 3.

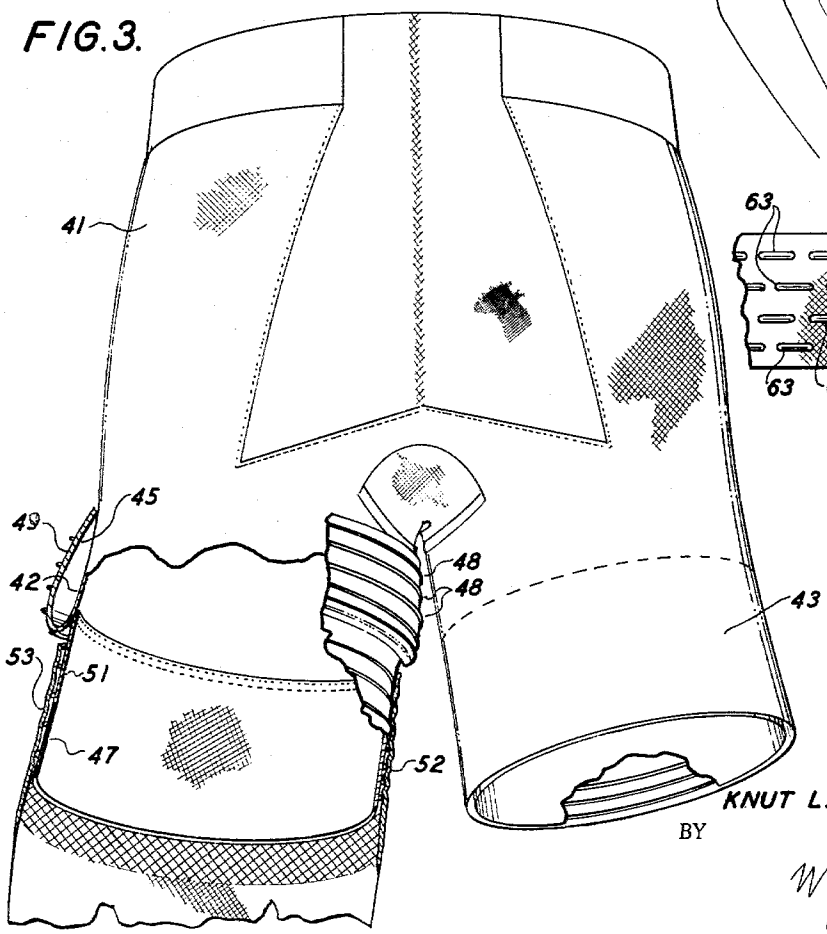

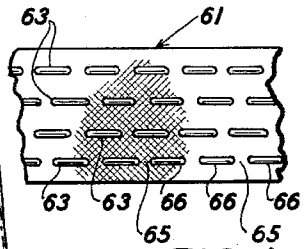

FIG. 4.

INVENTOR:
KNUT L. BJORN-LARSEN

BY

W. J. Gribble
ATTORNEY

May 31, 1966 K. L. BJORN-LARSEN 3,253,599

PANTY GIRDLE AND STOCKING SUPPORT

Filed Dec. 23, 1963 2 Sheets-Sheet 2

FIG. 5.

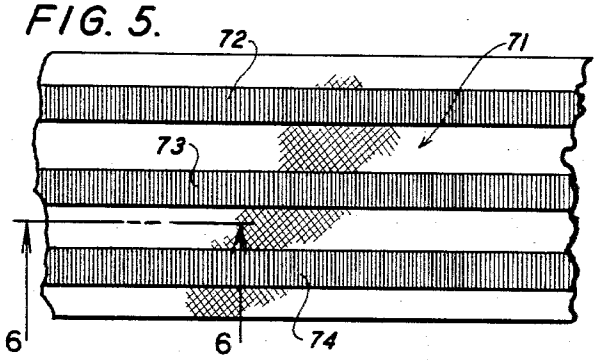

FIG. 6.

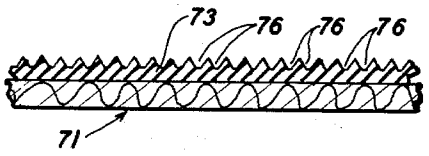

FIG. 7.

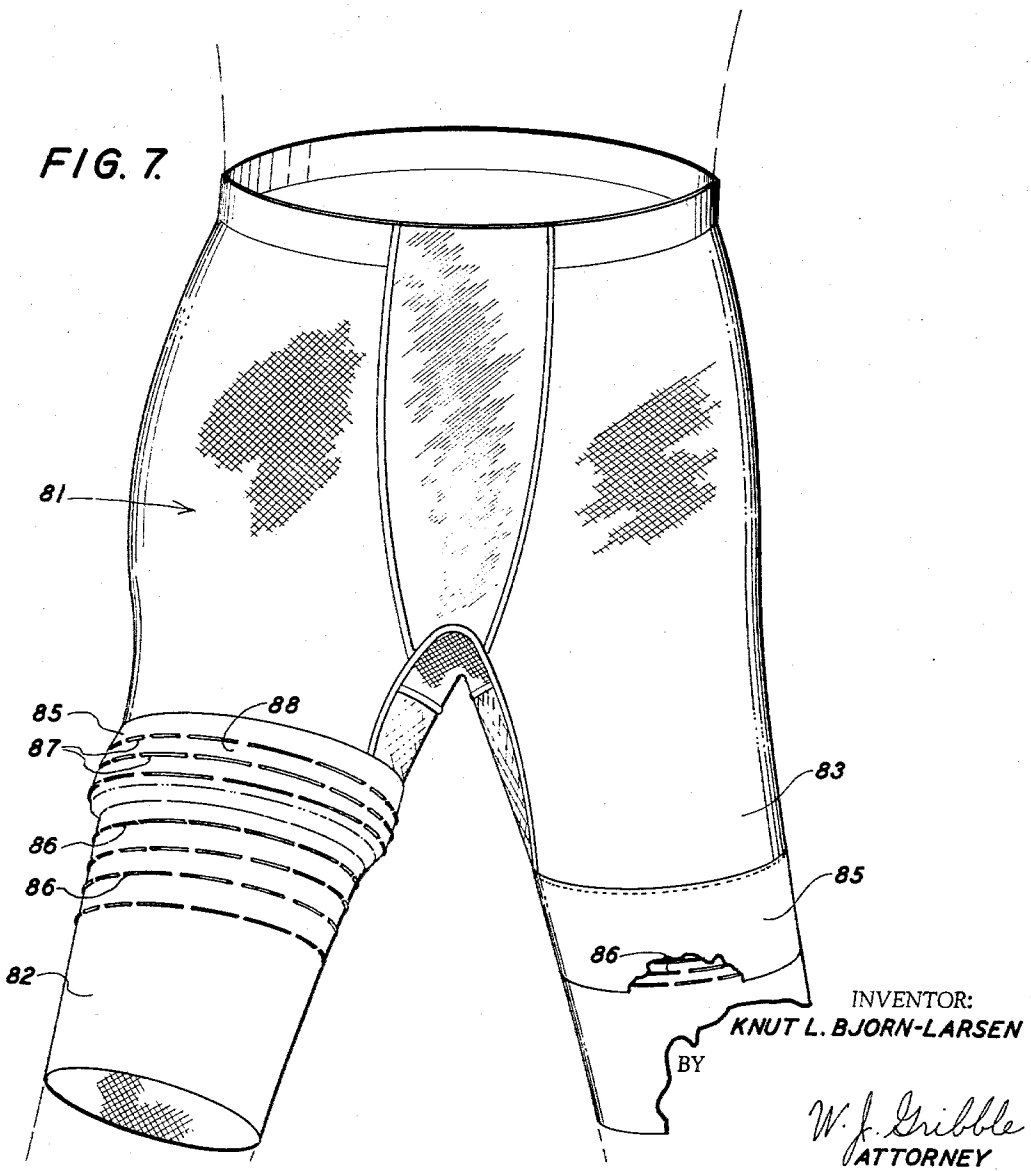

INVENTOR:
KNUT L. BJORN-LARSEN
BY
W. J. Gribble
ATTORNEY

United States Patent Office

3,253,599

Patented May 31, 1966

3,253,599

PANTY GIRDLE AND STOCKING SUPPORT

Knut L. Bjorn-Larsen, 128 S. Hacienda Ave., Glendora, Calif.

Filed Dec. 23, 1963, Ser. No. 332,610
7 Claims. (Cl. 128—528)

The invention relates to devices for supporting stockings or long hosiery such as those conventionally made from silk and nylon.

Conventional stocking or hosiery support means such as snaps and hooks and garters are unsuited, because of their bulk, for use with contemporary snug-fitting garments. Such garments are aimed to accentuate symmetrical aspects of the wearer. The aim is detracted from by the unsightly bumps disclosing beneath the outer garment the location of the bulky stocking support. I have invented stocking supporting means that blends with the general configuration of conventional restricting undergarments, such as girdles and elastic underpants, such that no demarcation is apparent despite the snugness with which outer garments overlie the undergarments. The invention contemplates a stocking supporting device that comprises a first band of elastic material adapted to restrict about the upper limb of a wearer, and a second band that overlies the first band. A plurality of friction members surrounds the first band. Additional friction members project from that surface of the second band adjacent the first band. The bands are affixed to each other but are separable so as to receive a stocking top therebetween. The second band overlaps the first band restrictively and the friction members thereon impel the stocking top into contact with the friction members on the first band. A mechanical friction lock is thereby established that retains the stocking top between the first and the second bands.

The first and second bands may be respectively the leg portion of a conventional panty girdle and an inner band fixed to the leg portion near its lower opening. Alternatively, the first and the second band may be, respectively, an outer restricting band fixed intermediate of a long leg portion of the so-called "long-line" panty girdles which effectuate restraint of the wearer's flesh from the waistline to the knee, and the long leg portion.

Since the primary purpose of the conventional restrictive undergarment is to control the contour appearance of the wearer, any deviation from the desired contour is objectionable. Stocking supports conventionally employed, as pointed out above, are undesirable because they do detract from this desired appearance because of bulk. Therefore, it is preferable that the devices of the invention be comprised of elements fabricated from the same thin, yet rugged, material used in the undergarments themselves. The preferred stocking supporting device of the invention is therefore fabricated of knit stretch materials such as the fabric known commercially as "Spandex."

The friction members that protrude from the surface of the first and second bands are preferably a latex base material that may be applied to the bands in parallel spaced, either continuous or intermittent, annuli securely adhered to or formed upon the surfaces of the bands.

The stocking supporting devices of the invention utilize conventional materials in a unique combination to achieve a substantially unobstrusive stocking support that is comfortable and that may be combined with conventional undergarments. These and other advantages of the invention are apparent in the following detailed description and drawing in which:

FIG. 1 is a perspective view, partly broken away, of a stocking support device in accordance with the invention;

FIG. 2 is a front view of a pair of the devices of FIG. 1 in use on a wearer;

FIG. 3 is a front view, partly broken away, of a preferred form of the invention;

FIG. 4 is a fragmentary side elevation of a band with friction members thereon;

FIG. 5 is a view similar to FIG. 4 of an alternate band in accordance with the invention;

FIG. 6 is a fragmentary sectional view taken along line 6—6 of FIG. 5; and

FIG. 7 is a front view of an alternate embodiment of the invention.

The embodiment of the invention illustrated in FIGS. 1 and 2 comprises a circular outer band **11** of an elasticized material such as the aforementioned Spandex or other similar stretch material. The outer band is fixed at its top **12** to a longer inner or second band **13** that is adapted to restrict tightly about the thigh of a wearer. Outer band **11** overlaps the top portion of the second band **13**.

Outer band **11** has an inner surface **15** which normally faces against an outer surface **16** of second band **13**. Surface **15** has a plurality of frictional annuli **18** that extend about the inner circular surface of band **15**. A plurality of frictional members **19** similar to annuli **18** surrounds the upper portion of second band **13**. Preferably, the frictional members of the outer band and the second band are disposed on their respective surfaces so that they do not coincide when surfaces **15** and **16** are brought together.

While the frictional members of the outer and second bands have been shown as continuous annuli in FIG. 1, they may have the configuration of discontinuous annuli, as shown at **18A** and **19A** of FIG. 2. In this figure a pair of stocking support devices **21**, **22** is shown in place upon the legs of a wearer schematically represented at **23**. A conventional undergarment or girdle **24** surrounds the lower torso of the wearer. The stocking support devices **21**, **22** are fitted on thighs **27**, **28** of the wearer so that the tops of the devices are very close to a bottom edge **29** of the girdle. Preferably, both the outer band and the second band are made from a stretch material that has great strength and elasticity, but is of minimum thickness. In FIGS. 1 and 2, as in the rest of the illustrative drawing, the thickness of materials is exaggerated for pictorial clarity.

Devices **21** and **22** of FIG. 2 are shown in differing conditions. Device **22** is illustrated in place upon the wearer, but with outer band **11** turned upwardly out of contact with second band **13**. A stocking top **31** of conventional nylon or silk hosiery is pulled over the second band from bottom band opening **33** until the stocking top overlaps the friction members **19A** of the second band. Then outer band **11** is folded down and, because of its elastic characteristics, compresses the stocking top between the protruding friction members **18A** and **19A** of the two bands of the device, as can be seen with respect to stocking support device **21**. The stocking top is securely held by the friction members of the inner and outer bands and with little or no interruption of the smooth outer configuration established by girdle **24**.

FIG. 3 illustrates a stocking support device in accordance with the invention which comprises a panty girdle **41** having depending legs **42**, **43** that are adapted to fit snugly about the upper thighs of a wearer. Each leg **42**, **43** has a lower zone **45** that, in effect, is the outer band of the stocking support device of the invention. An inner or second band **47** is attached to, or formed with, each leg of the panty girdle. Various conventional means of

attachment may be used, such as weaving, adhering or stitching. A plurality of friction members **48** protrude from an inner surface **49** of outer band **45**. A plurality of similar friction members **51** protrude from an outer surface **52** of inner band **47**.

Once again, the inner band is preferably fabricated from a stretch material, such as that conventionally used for figure-conforming undergarments. The two material thicknesses, such as the overlap of the outer and inner bands creates, are thereby of lesser magnitude than conventional hosiery fasteners. Additionally, since the attached band is interior, there is a continuous outer garment from the girdle crotch to the end of the girdle leg. No perceptible stocking supporting device is therefore apparent beneath a snug outer garment.

As in the previously described embodiments, panty girdle **41** of FIG. 3 supports a pair of stockings by the mechanically gripping action of the two pluralities of friction members engaging stocking top **53**. Since this stocking top is conventionally comprised of several thicknesses of the stocking material, it has the necessary strength to withstand the downward forces imposed by even violent leg motion.

The stocking support devices of the invention have the added advantage of gripping the stocking top in substantially continuous fashion about its entire periphery, in contrast to the two or three suspension points or gripping points afforded on the stocking top by conventional stocking garters. Longer life for the stocking is thus assured, since runs emanating from the stocking support points are eliminated.

FIGS. 4–6 illustrate two embodiments of the friction members that may be affixed to or formed upon the first and second bands of the inventive devices. In FIG. 4 a fragment of a band **61** is shown having a plurality of rows **63** of friction members. Each of the rows is discontinuous. A slight interval **65** separates adjacent elongate nodules **66** that make up the row. Preferably, each nodule is a latex-based material that is applied to the stretch material of the band prior to assembly into a garment. Several latex compounds exist that in their liquid state bind freely to materials such as the preferred stocking support devices are made from, and possess good friction gripping characteristics.

In FIGS. 5 and 6 a further alternate embodiment is shown. A fragment **71** of a band is shown having three friction member rows **72, 73, 74**. Each of the rows is continuous on the band. The surface of each row, as can be seen in FIG. 6, is serrated by grooves **76** running transversely of the friction member rows. The serrations may be formed when the rows are applied in liquid condition to continuous lengths of band material. Both the material of the bands and the applied latex may be subjected to heat lamps while traversing a continuous assembly line to improve the bond between them. The serrations may be ingrained while the latex rows are still malleable and then cured at a further processing station on the assembly line.

It is possible to weave the friction members into the fabric surface of the first or outer bands when the material is originally knitted. However, such fabrication requires special equipment and adds to the cost.

In FIG. 7 a further alternate embodiment of the invention is illustrated. An undergarment **81**, which may be a "long-line" panty girdle of a figure-conforming stretch material, has right and left legs **82, 83**, respectively, that reach almost to a wearer's knees. An outer band **85** circles each leg above the midpoint thereof. The outer band is attached to the exterior of the leg at the top of the outer band. Attachment may be by stitching, adhering, etc. The band may therefore be turned upwardly, as is the band on leg **82**, so that the tops of hosiery (not shown) may be pulled up over the friction members

86 on the panty leg. The friction members may be any of the types described heretofore or an overall pattern of small friction dots, and are directly applied to the exterior of the panty leg. A plurality of friction members **87** protrude from the inner surface **88** of each outer band **85**.

The bands **85** are of a strong stretch material. When turned down over the hosiery top and the friction members **86** of the panty leg, the outer bands restrict snugly about the thigh of the wearer and impel the friction members of both the outer band and the inner band defined by the outer surface of the panty leg into locking engagement with the stocking top. The stocking is therefore securely held against downward displacement from whatever forces are imposed upon it.

Nylon or other cloth "pettipants" that fulfill functions of both panties and half-slips may be combined with either an inner or outer band having friction members as described with respect to the embodiment of FIG. 7. Since pettipants do not fit as tightly about the wearer's thigh as does a girdle leg, it is feasible to place an inner band high within the pettipant leg and still apply a stocking top between the two bands. This would be very difficult with a long panty girdle leg.

It is apparent from the foregoing description that many variations in the specific embodiments of the invention will occur to those skilled in the art. Therefore, I desire that the foregoing specific embodiments be regarded as illustrative only and that the scope of the invention be defined by the appended claims.

I claim:

1. A girdle adapted to be fitted to a wearer for use with conventional long stockings, said girdle comprising an upper portion girdling the lower torso of a wearer, depending elastic leg portions adapted to conform to the upper leg configuration of a wearer, an elastic circular band fixed to each leg portion, said circular band having one of its surfaces lying adjacent the surface of the leg portion, resilient friction means protruding from the circular band toward the leg portion for substantially the total girth of the band, resilient friction members extending from the leg portion toward the friction members of the band, and means for fixing together the band and the leg portion such that a stocking top may be interposed between the band and the leg portion adjacent the band to be mechanically held by the friction members against downward displacement, said fixing means being disposed between the upper portion and the location of the respective friction members of the leg portion and the band.

2. A girdle in accordance with claim **1** wherein the depending leg portions and at least a part of the torso portion are formed of the same piece of knit stretch material.

3. A girdle comprising an upper portion encircling the lower torso of a wearer and including a closed crotch structure and two depending leg structures respectively including an inner tubular member formed of a knit stretch material adapted to conform to the leg of the wearer and an outer tubular member formed of a knit stretch material and adapted to conform to the leg of the wearer, said two tubular members having adjacent surfaces of substantial length, resilient friction protruding members disposed on at least one of the respective adjacent surfaces of the two tubular members, said two tubular members being secured together about their respective complete peripheries between the crotch of the torso portion and the location of the resilient friction protruding members to provide a normally closed pocket having an outer, liftable tubular flap overlying a tubular leg engaging portion, said pocket being adapted to receive a stocking top and to hold said stocking top between the tubular flap and the tubular engaging portion in a friction engagement.

4. A girdle in accordance with claim 3 wherein the resilient protruding members are provided in peripheral patterns on the adjacent surfaces of the two tubular members.

5. A girdle in accordance with claim 4 wherein the respective peripheral patterns are interrupted to provide a series of stocking retaining protrusions.

6. A girdle in accordance with claim 3 wherein the respective outer tubular members provide the principal leg structures and the inner tubular members are substantially shorter and are secured to the inner surfaces of their respective outer tubular members.

7. A girdle in accordance with claim 6 wherein at least a part of the torso portion is formed of the same piece of knit stretch material as the outer tubular members.

References Cited by the Examiner

UNITED STATES PATENTS

1,584,333	5/1926	Thompson	128—530
1,731,100	8/1929	Herbener	2—311
2,300,153	8/1942	Herbener	128—530
2,663,027	12/1953	Posson	2—337 X

FOREIGN PATENTS

414,177	5/1925	Germany.
415,943	9/1934	Great Britain.

ADELE M. EAGER, *Primary Examiner.*

JORDAN FRANKLIN, *Examiner.*

M. J. COLITZ, *Assistant Examiner.*