Aug. 16, 1932. H. P. ELLIOTT 1,872,130

STENCIL MAKING METHOD AND APPARATUS

Filed Dec. 31, 1928 2 Sheets-Sheet 1

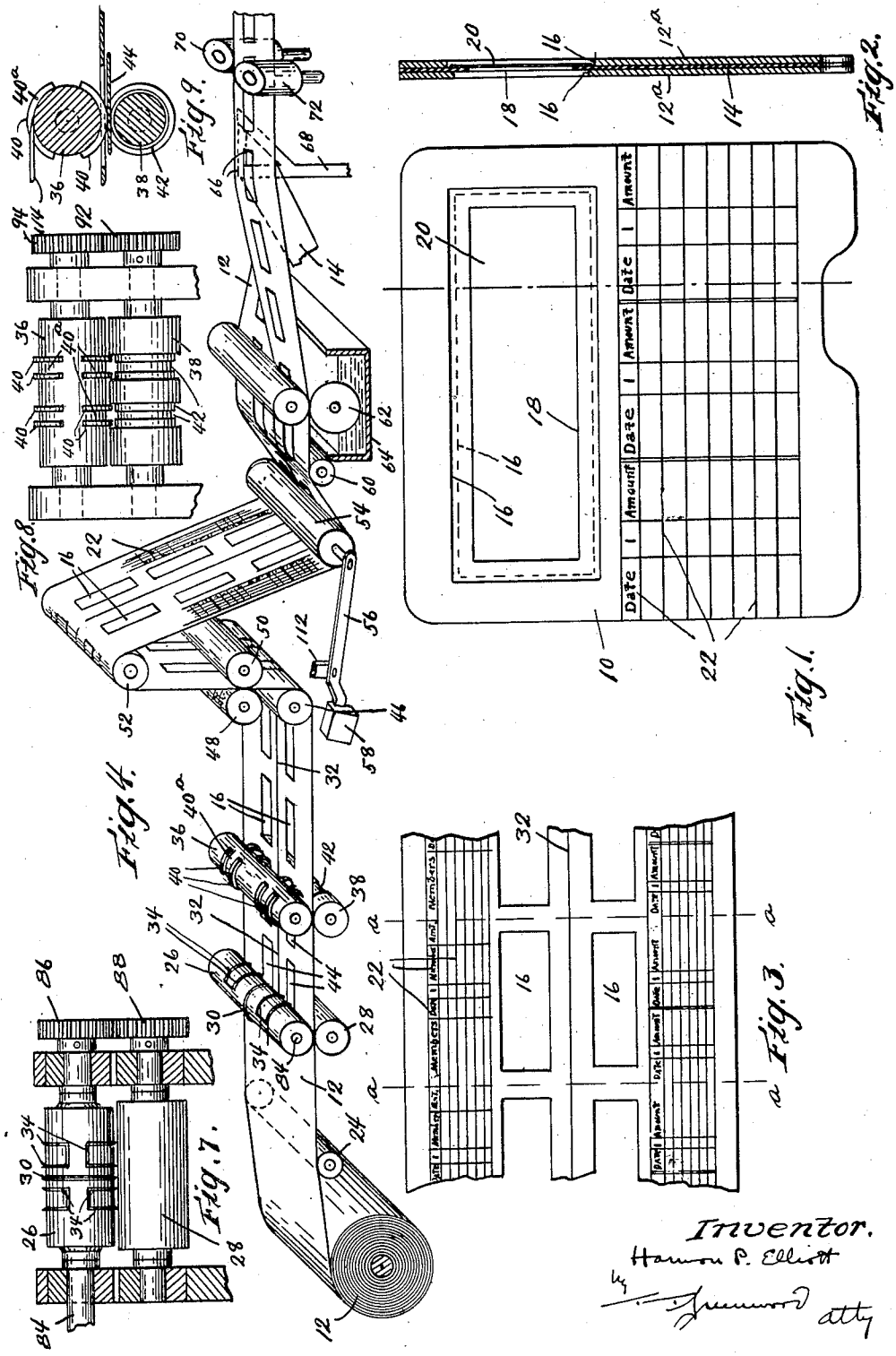

Fig. 1.

Fig. 2.

Fig. 3.

Fig. 4.

Fig. 7.

Fig. 8.

Fig. 9.

Inventor.
Harmon P. Elliott
by Thurmond atty

Aug. 16, 1932. H. P. ELLIOTT 1,872,130

STENCIL MAKING METHOD AND APPARATUS

Filed Dec. 31, 1928 2 Sheets-Sheet 2

Fig. 5.

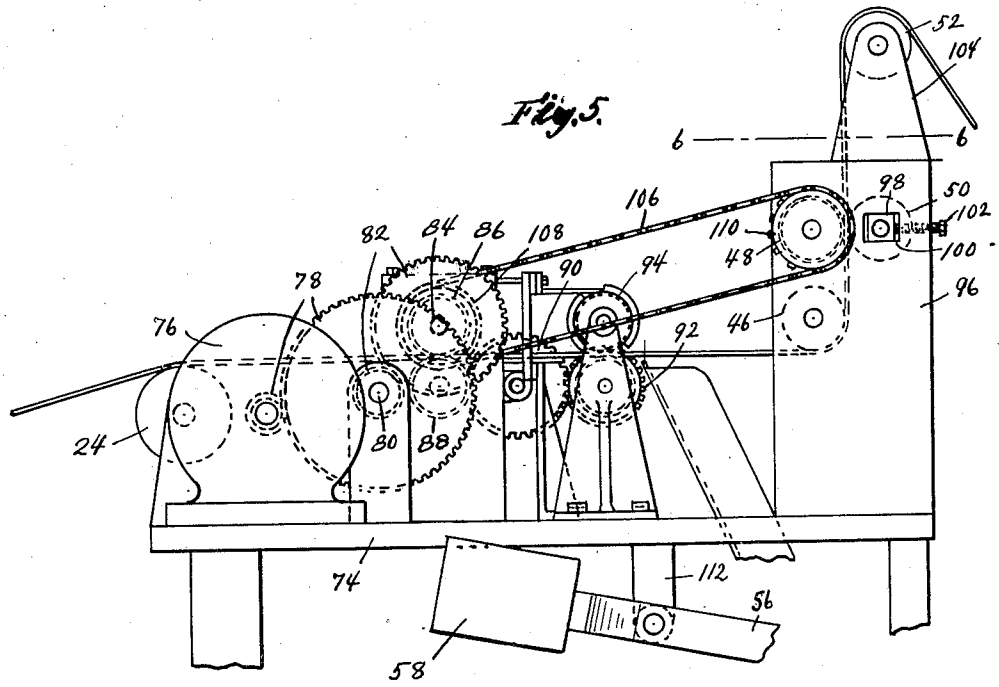

Fig. 6.

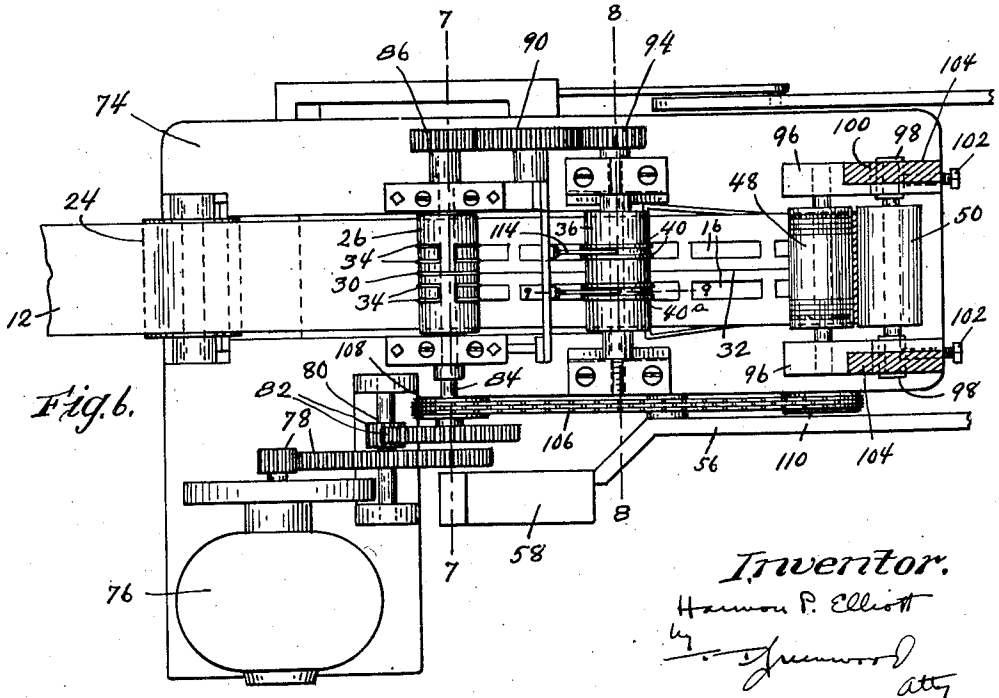

Inventor.
Harmon P. Elliott
by Drummond
Atty

Patented Aug. 16, 1932 1,872,130

UNITED STATES PATENT OFFICE

HARMON P. ELLIOTT, OF WATERTOWN, MASSACHUSETTS

STENCIL MAKING METHOD AND APPARATUS

Application filed December 31, 1928. Serial No. 329,471.

This invention relates to stencil making methods and apparatus.

The stencil with which this invention is concerned consists of a relatively stiff frame of thick paper which supports a thin paper stencil sheet that bears the printing characters, as addresses and the like. The stencils are adapted to be run through a stencil printing machine for the purpose of printing such characters on letters, bills and the like.

It is also common to use the stencils as sources of information regarding the addresses borne thereby. To this end, the frames of the stencils usually bear printed matter and spaces in which information can be inserted from time to time. It is common for instance, to use the stencils as ledger cards; and for this use the frames of the stencils have printed characters providing spaces for the amounts purchased from time to time by the printing addresses of the stencils, and other printing matter relevant to the addresses. Usually both sides of the stencil frame are utilized for this purpose.

Heretofore, I have made the stencil frame in an essentially continuous manner from a long strip or roll of paper that is conducted in succession to a series of devices which blank out the windows over which the stencil sheet is subsequently secured, and which fold the long strip lengthwise upon itself, and to other devices that perform other steps upon the strip. The stencil frames are then severed from the long strip and the individual frames are run subsequently through a printing machine twice to print on both sides of the stencil.

An object of the present invention is a process and apparatus for the manufacture of stencils which includes the printing of the printed data that is contained on both sides of the stencil during the process of manufacture thereof and before the frames have been separated from the long strip from which they are made and, specifically, in carrying out such printing before the strip has been folded. In this way, I am enabled to print the data that is on both sides of the stencil sheet in one operation instead of the two operations heretofore required, thus saving considerable time and expense and also obtaining an accuracy of registration of the printed data on the frame that is difficult to secure otherwise.

A further object of the invention is generally to improve upon stencil making methods and apparatus.

Fig. 1 is a plan view of one face of the stencil made in accordance with the present invention.

Fig. 2 is an enlarged section of the stencil taken along line 2—2 of Fig. 1.

Fig. 3 is a plan view of the partially formed stencil strip prior to its being folded.

Fig. 4 is a diagrammatic view of certain successive steps in the manufacture of the stencil.

Fig. 5 is a side elevation of the window-blanking and printing machine in accordance with this invention.

Fig. 6 is a plan view of the machine of Fig. 5 taken along line 6—6 of Fig. 5.

Fig. 7 is a section taken along line 7—7 of Fig. 6 and showing the cutting rolls.

Fig. 8 is a section taken along line 8—8 of Fig. 6 and showing the blanking rolls.

Fig. 9 is a section along line 9—9 of Fig. 6.

A stencil made in accordance with this invention consists of a stiff frame 10 that is composed of two sheets 12*a* of relatively stiff paper adhesively united to an interposed thinner sheet 14. The sheets 12*a* have registering windows 16 therein and the thin sheet 14 is extended into the said windows 16 and therein has a window 18. A thin sheet of stencil paper 20 is adhesively secured to the sheet 14 over the window therein and lies within one of the windows 16 so that it is entirely below the surface of the frame. The

stencil frame has printed data 22 thereon which is located below and is in register with the window and occupies both sides of the stencil as is best shown in Fig. 3. The printed data may be such as to form a ledger sheet in which the amounts purchased by the address borne by the stencil sheet 20 can be recorded from time to time. This ledger data may occupy one face of the stencil while the printed data on the other face may be used for supplying other desirable information.

In accordance with this invention, the printed data is applied at one operation to both faces of the strip or web from which the stencils are subsequently cut and before the strip has been folded lengthwise upon itself.

The various steps of the process are illustrated diagrammatically in Fig. 4. The paper strip or sheet 12 from which the stencils are made is arranged in roll form. The paper sheet is drawn in a continuous manner from the roll and passes over a guide roll 24 and thence between an upper cutting roll 26 and a cooperating lower cylinder roll 28. The cutting roll is provided with a circumferentially raised continuous edge 30, see also Fig. 7, in the middle thereof which cuts into the sheet 12 but not completely through it and forms a longitudinal groove or crease 32 in the sheet which defines a longitudinal line about which the sheet is adapted to be folded.

The cutting roll 26 also is provided with sets of raised cutting edges 34 on opposite sides of the edge 30 which bound rectangular spaces and are adapted to cut into the sheet on opposite sides of the line of fold 32 and define the outlines of sets of windows which are adapted subsequently to be blanked out of the sheet. The sheet 12 then passes between upper and lower blanking rolls 36 and 38 respectively, see also Fig. 8.

Said upper roll is provided with sets of peripherally raised ribs 40 and said lower roll 38 is provided with peripheral grooves 42 into which said ribs are adapted to rotate to shear or sever the blanks 44 which lie within the scored outlines of the windows, whereby to form the windows in the sheet. The blanked-out sheet is then passed about a guide roll 46 and thence upwardly between a printing roll 48 and a cooperating platen roll 50. The printing roll 48 is provided with suitable type, as electrotype sheets, and operates to print the desired data on the sheet 12, simultaneously on both sides of the line of fold thereon, and in register with the windows of the sheet, as shown in Fig. 3. The printed sheet thence passes over a guide roll 52 and downwardly in a relatively long pass and over a take-up roll 54 which is supported on a pivoted lever 56 provided with a counterweight 58 on the other side of the pivot that partially offsets the weight of the take-up roll. The length of travel of the sheet between the upper guide roll 52 and the take-up roll is adapted to be sufficient to permit the ink to dry before it comes in contact with the take-up roll. The printed sheet thence passes over a guide roll 60 and over an adhesive-applying roll 62 which rotates in a suitable adhesive contained in a tank 64 and applies adhesive to the under or unprinted face of the sheet 12. The sheet thence passes over a thin horizontal folding bar 66 supported on a suitable frame 68, which bar is aligned with the folding crease 32 in the sheet and cooperates with the vertical press rolls 70 and 72 disposed ahead of said bar to fold over the two sides of the sheet along the crease line 32 to bring the windows of the two sides of the sheet into register with each other.

A long strip of the thin intermediate sheet 14 is fed edge up under the stencil sheet 12 in front of the folding bar 66 and thus is enclosed between and is adhesively united to the opposite sides of the sheet 12 when it is folded. The folded strip thence passes to other apparatus not herein shown which cuts a window out of that portion of the intermediate sheet 14 that is in the windows of the sheet 12, and which blanks off the separate stencils from the long sheet along the lines *a*—*a* of Fig. 3.

The guide roll 24, the cutting and cylinder rolls 26 and 28, the blanking rolls 36 and 38, the guide roll 46, the printing roll 48 and the platen 50 and the upper guide roll 52 are united in a unitary structure and are supported by the frame 74 as shown in Figs. 5 and 6.

The cutting blanking, and printing rolls are all driven at the same peripheral speed from a common source of power as the motor 76. Said motor is connected through suitable reduction gearing 78 with a counter shaft 80 and said counter shaft 80 is connected through other suitable reduction gearing 82 with a shaft 84 of the cutting roll 26. Said cutting roll has a gear 86 on the other end thereof which meshes with a gear 88 of the same pitch diameter fixed to the cylinder roll 28, see especially Fig. 7, so that both rotate at the same speed.

An idler gear 90 connects the gear 88 with a gear 92 of the same size fixed to the shaft of the lower blanking roll 38 so that said blanking roll is driven at the same speed as the cutting roll. The gear of said blanking roll is in mesh with a gear 94 of the same size fixed to the upper blanking roll 36, see especially Fig. 8, so that both rolls are driven at the same speed. The printing roll 48 is elevated above the guide roll 46 and is journalled in upstanding brackets 96 of the frame. Suitable inking mechanism, not herein shown, is provided to supply said roll with ink.

The platen roll 50 has its shaft received in boxes 98 that are located in horizontally

elongated slots 100 of the frame so that the platen has a limited extent of adjustment toward and away from the printing roll and is held in any adjustment by the set screws 102. The idler roll 52 is supported on extensions 104 of said bracket 96 and above the printing roll. The printing roll is driven positively at the same speed as the cutting and blanking roll by means of an endless chain 106 which is passed about a sprocket 108 fixed to the shaft of the cutting roll 26 and also about a sprocket 110 of the same size fixed to the shaft of the printing roll. The lever 56 of the take-up roll 54 is pivoted in a bracket 112 which is carried by and depends below the frame 74 of the machine.

The ribs 40 of the blanking roll are provided with circumferential grooves 40*a* therein in which fixed fingers 114 are located. Said fingers serve to strip the sheet or the blanks 44 from the roll if they should adhere thereto.

With this arrangement, the printed data is applied to the sheet from which the stencils are subsequently cut close to the point at which the windows are blanked out, and the blanking and printing rolls are positively driven, so that there is little chance for the printed data to be out of register with the windows due to expansion and contraction of the sheet. The printing is also effected as a part of the stencil making operation and does not require a separate operation as has heretofore been the case. Both faces of the stencil are printed at the same time instead of in two separate operations as has heretofore been the case. The printed data applied by the electrotype roll 48 extends, for the type of stencil here shown, preferably in continuous uninterrupted lines parallel with the rows of windows, as shown in Fig. 3, and thus traverse the spaces between the windows and hence is severed when the separate frames are separated from the web along the lines *a*—*a* and between the windows. This provides printed data on each stencil that etxends completely to the ends of the stencils, which is desirable for neatness and to minimize the effect of small departures from precise registrations.

The arrangement thus produces a better stencil at less expense than has been the case heretofore.

I claim:

1. The method of making stencil frames which consists in feeding a web of paper in a continuous manner, blanking windows out of successive portions of the moving web, and printing on said moving web in register with the windows therein.

2. The method of making stencil frames which consists in blanking the windows of successive stencils out of a long sheet, folding the sheet lengthwise thereof between the window blanks, and printing on the sheet in register with the windows prior to the folding of the sheet.

3. The method of making stencil frames which consists in blanking out successive pairs of windows lengthwise of the sheet, folding the sheet lengthwise between the pairs of windows, and printing on the sheet opposite and in register with each pair of windows and on both sides of the line of fold after the blanking out of the windows and prior to the folding of the sheet.

4. The method of making stencil frames which consists in the following steps in the order named, scoring a long sheet in the middle and lengthwise thereof to provide a longitudinal line of fold, scoring the sheet on each side of the line of fold to provide the outlines of spaced pairs of windows, removing the material within the outlines of the windows, printing on the sheet in register with each window and on opposite sides of the line of fold, applying an adhesive to the sheet on the side thereof free from the printing characters, folding the sheet along the line of fold and about an intermediate sheet, and subsequently severing stencil blanks from the folded sheet.

5. A stencil making machine having the combination of cutting rolls having means to score a line of fold in the middle of a long sheet passed between said rolls and also to score the outlines of windows in said sheet on opposite sides of the line of fold, blanking rolls having means to blank out the material in the windows of the sheet, printing rolls arranged to print on the sheet on both sides of the line of fold and at the windows, driving means which positively rotatably connects said blanking and printing rolls, and means to move a sheet to present successive portions thereof successively to the action of said rolls.

6. A stencil making machine having the combination of cutting rolls having means to score a line of fold in the middle of a long sheet passed between said rolls and also to score the outlines of windows in said sheet on opposite sides of the line of fold, blanking rolls having means to blank out the material in the windows of the sheet, printing rolls arranged to print on the sheet on both sides of the line of fold and in register with the windows, and means to move a sheet to present successive portions thereof successively to the action of said rolls including means to drive all of said rolls positively at the same peripheral speed.

7. A stencil making machine having the combination of a cutting roll adapted to score a sheet to define successive windows therein, means including a blanking roll arranged to blank out the material of the sheet within the score lines whereby to form the

windows in the sheet, means including a printing roll arranged to print on the sheet in register with the successive windows, and means to move a paper sheet successively through said rolls.

8. A stencil making machine having the combination of means to form a line to fold in the longitudinal middle of a long sheet, and longitudinally-spaced pairs of windows in said sheets on opposite sides of the line of fold, means to print on one face of the sheet in register with each window and on opposite sides of the line of fold, means to apply an adhesive to the other face of the sheet on both sides of the line of fold, means to present an intermediate sheet edgewise to said first sheet at the line of fold, means to fold the sheet about the line of fold and on opposite sides of the intermediate sheet, and means to move the long strip in succession between the aforesaid means.

9. The method of making a stencil frame having a window therein and printed data on the frame in predetermined relation with the window, which method consists in forming successive windows in and spaced lengthwise of a web of paper, printing the printed data beside the row of windows and across the spaces between the rows, and severing the web into separate stencil frames between the successive windows and across the printed data.

10. The method of making a stencil frame having a window therein and printed data on the frame in predetermined relation with the window, which method consists in forming successive windows in and spaced lengthwise of a web of paper, printing the printed data in a continuous uninterrupted line beside the row of windows and severing the web into separate stencil frames between the successive windows and across the continuous line of printed data.

11. As a new article of manufacture, a stencil-frame web comprising a web of relatively stiff paper having a continuous scored line of fold in the middle and along the length thereof, with parallel rows of windows located on opposite sides of the line of fold and spaced lengthwise of the web, the windows of one row being aligned with the windows of the other row, and the web having parallel rows of printed data on opposite sides of the line of fold, each row consisting of repetitions of the same data, and repetitions being aligned with a pair of aligned windows of the two rows thereof.

12. As a new article of manufacture a stencil-frame web comprising a web of relatively stiff paper having a continuous scored line of fold in the middle and along the length thereof, with parallel rows of windows located on opposite sides of the line of fold and spaced lengthwise of the web, the windows of one row being aligned with the windows of the other row, and the web having parallel rows of printed data on opposite sides of the line of fold, each row consisting of repetitions of the same data, and repetition being aligned with a pair of aligned windows of the two rows thereof, the rows of data being continuous and traversing the spaces between the windows of the rows.

In testimony whereof, I have signed my name to this specification.

HARMON P. ELLIOTT.