Oct. 14, 1930. W. L. CONRAD 1,778,380

PROCESSING APPARATUS

Filed Aug. 2, 1928

Fig. 1.

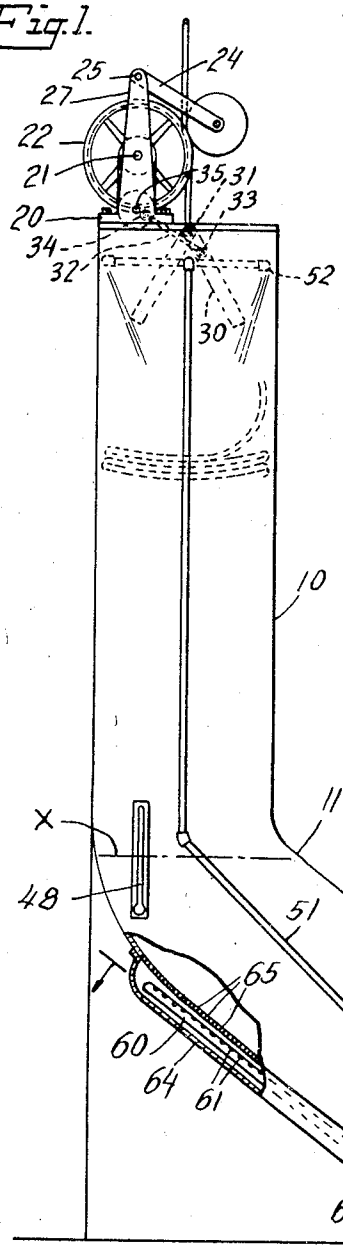

Fig. 2.

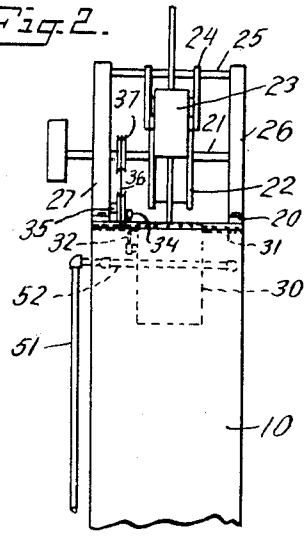

Fig. 3.

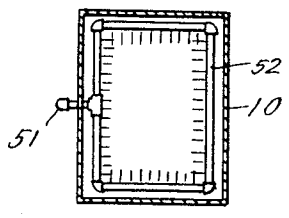

Fig. 4.

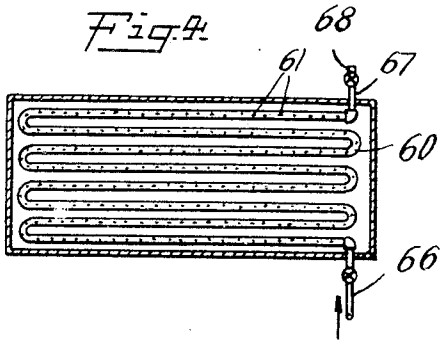

Fig. 5.

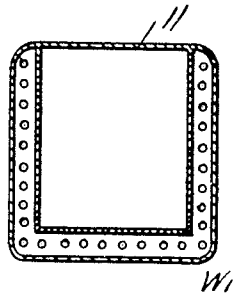

INVENTOR
William L. Conrad
BY
Marshall & Hawley.
ATTORNEYS

Patented Oct. 14, 1930

1,778,380

UNITED STATES PATENT OFFICE

WILLIAM L. CONRAD, OF BOSTON, MASSACHUSETTS

PROCESSING APPARATUS

Application filed August 2, 1928. Serial No. 296,946.

This invention relates to apparatus for treating textile material.

Processing apparatus in which textile material is subjected to a process involving the use of a treating liquor has many applications, such as dyeing, chemicking, bleaching, etc.

The apparatus embodying the invention is designed to carry on a process continuously and to operate on a web or rope of fabric or on skeins of yarn preferably looped together or in chain form or like material which is continuously fed into the apparatus in which liquid is circulated and continuously withdrawn therefrom. The apparatus is so constructed and arranged as to accumulate enough of the fabric between the entering and leaving points to allow the fabric to be subjected to the action of the liquor for a sufficient length of time for the liquor to have the desired action on the fabric.

Various forms of stacks or chutes have been used for conditioning textile material, but such apparatus is not sutiable for treating certain materials, such as those having artificial fibers or fibers of little or no tensile strength. The material packs so tightly under its own weight in such stacks that the pull necessary to withdraw the material from the stack separates the fibers and injures the material.

This invention has for its salient object to provide apparatus of the character described so constructed and arranged that the material will be fed through the apparatus by its own weight but will move freely through the heating liquor and will not pack tightly therein, preventing the withdrawal of the material without injury thereto.

Another object of the invention is to provide apparatus of the character specified adapted for use in carrying out a continuous boiling process in which the goods are fed into and continuously withdrawn from the apparatus.

Further objects of the invention will appear from the following specification taken in connection with the drawings, which form a part of this application, and in which

Fig. 1 is an elevational view, partly in section, of one form of apparatus constructed in accordance with the invention;

Fig. 2 is an elevational view, partly broken away, showing the feeding mechanism for feeding the material into the apparatus;

Fig. 3 is a top plan view of the stack;

Fig. 4 is a sectional elevation taken substantially on line 4—4 of Fig. 1; and

Fig. 5 is a sectional elevation showing the heating conduit extending on three sides of the chute.

The invention briefly described consists of apparatus of the "J box" type, comprising a stack and a chute communicating with the stack and receiving the material therefrom. The chute has an upwardly extending receiving end and an upwardly extending discharge end. Means is provided at the top of the stack for feeding the material thereinto and feeding means is also provided in the discharge end of the chute for withdrawing the material therefrom.

The chute is made of suitable material to receive and hold treating liquor and liquor is continuously withdrawn from the bottom of the chute and fed into the top of the stack in such a manner that it will permeate the material fed through the stack. The solution or treating liquor used will depend on the process to be carried out and the apparatus can be used for cleansing, dyeing, chemicking, bleaching, etc., but in all cases it is essential for the proper treatment of the goods that the liquor be maintained at a boiling temperature at all times. For this reason means has been provided for continuously heating the liquor in the chute. After the liquor has been brought up to the boiling temperature, it will not be necessary to expend as much heat in maintaining this temperature.

The material, as it passes through the liquor, is carried around the chute under its own weight, but due to being submerged in the liquor, it is not tightly packed and can be freely withdrawn from the discharge end of the chute. This renders the apparatus particularly valuable for use in treating materials such as those having artificial fibers or fibers of very little tensile strength.

Further details of the invention will appear from the following description.

In the form of apparatus illustrated in the drawings, there is shown a stack 10 communicating at its lower end with the upwardly extending receiving end 11 of a chute 12. The discharge end 13 of the chute also extends upwardly.

Any suitable means may be provided for feeding the material into the stack and in Figs. 1 and 2 there is shown one form of feeding mechanism particularly adapted for feeding material in rope form. This mechanism is mounted on a bracket 20 and comprises a feed shaft 21 driven from any suitable source of power, a feed roller 22 mounted on the shaft 21, and an idler roller 23 carried by links 24 pivoted on a spindle 25 secured to the upper end of the arms 26 and 27 of the bracket 20.

After the material passes between and is fed by the rollers 22 and 23, it passes through a guiding or distributing tube 30. The tube 30 is pivoted on a spindle 31 and is oscillated back and forth across the stack by means of a pitman 32 connected at one end at 33 to the tube 30 and at its opposite end to an eccentric 34 mounted on a spindle 35 and driven by a belt connection 36 with a grooved pulley 37 carried by the shaft 21.

The treating liquor is fed or dumped into the chute 12 in any suitable manner and is maintained at the level indicated by the lines X in the ends 11 and 13 of the chute. An overflow pipe 40 communicates with the discharge end 13 of the chute at the level indicated by the line X and also communicates with a pipe 41. The pipe 41 has a drain valve 42 therein and also communicates at 43 with the lower portion of the stack, a valve 44 being interposed between the connection of the pipe 40 with pipe 41 and the portion of the pipe communicating with the lower end of the chute.

A gauge pipe 45 is mounted on the discharge end of the chute for indicating the level of the liquid therein and a thermometer 46 is also mounted on the discharge end of the chute for indicating the temperature of the liquid therein. A thermometer 48 is also mounted on the receiving end of the chute in order to indicate the temperature of the liquor at this portion of the chute. The chute has a drain opening at the bottom thereof closed by a plug 49.

The liquor is continuously withdrawn from the lower portion of the chute through a pipe 50 and is fed by a pump P through a pipe 51 to a rectangular feed pipe 52 disposed at the upper end of the stack. The feed pipe 52 has openings or perforations therein adapted to direct the liquor inwardly into engagement with the material as it is fed into and through the stack.

Feed rolls 55 and 56 are provided at the discharge end of the chute for withdrawing the material therefrom, these rolls being driven from any suitable source of power.

As above stated, it is most essential in processing textile material that the processing liquor be maintained at or near the boiling point at all times. Means has been provided for maintaining the temperature of the treating liquor and this means comprises a plurality of coils 60 of pipe having perforations 61 therein. The coils of pipe, as shown in Fig. 1, are mounted on the chute in a casing 64 secured to the chute. The wall of the chute to which the casing is secured is perforated, as shown at 65. The coils 60 receive steam from a steam supply pipe 66 and the steam passes from the coils through the perforations 61 and through the perforations 65 in the wall of the chute into the chute. If the liquor is placed in the chute cold, a considerable quantity of steam will be required to heat the liquor to boiling point. After this point has been reached, however, very little steam is required to maintain the liquor at the proper temperature. A pipe 67 is connected to the end coil for draining the coil, but a valve 68 is provided for closing the discharge end of the pipe 67 since during the processing of the material, practically all of the steam passes into the processing liquor.

In Fig. 5 the heating coils for maintaining the temperature of the processing liquor are shown as extending on three sides of the chute instead of extending merely on the bottom thereof, as shown in Fig. 1.

From the foregoing specification it will be seen that simple, practical apparatus has been designed for carrying out a continuous boiling processing of material. By means of this apparatus the material will be continuously fed into and withdrawn and will be maintained in such condition that it can be withdrawn freely from the discharge end of the chute.

Although one specific embodiment of the invention has been particularly shown and described, it will be understood that the invention is capable of modification and that changes in the construction and in the arrangement of the various cooperating parts may be made without departing from the spirit or scope of the invention, as expressed in the following claims.

What I claim is:

1. Apparatus for treating textile material comprising a chute having an upwardly extending receiving end and an upwardly extending delivery end, said chute being constructed to hold treating liquor, means for maintaining the liquor at a predetermined level and heating means to inject a heating medium to the liquor, said heating means being so located adjacent the path of travel of the textile material, as to provide an unobstructed passage.

2. Apparatus for treating textile material comprising a chute having an upwardly extending receiving end and an upwardly extending delivery end, said chute being constructed to hold treating liquor, and means carried by and communicating with the chute for conducting steam into the chute to heat the liquor, said means being so located adjacent the path of travel of the material, as to provide a free unobstructed passage.

3. Apparatus for treating textile material comprising a chute having an upwardly extending receiving end and an upwardly extending delivery end, said chute being constructed to hold treating liquor, means for withdrawing liquor from the lower portion of the chute and conducting the liquor to the upper end of the chute, and means communicating with the chute for injecting a heating medium and heating the liquor therein, said heating means being so located adjacent the path of travel of the textile material, as to provide an unobstructed passage.

4. Apparatus for treating textile material comprising a chute having an upwardly extending receiving end and an upwardly extending delivery end, said chute being constructed to hold treating liquor, means for withdrawing liquor from the lower portion of the chute and conducting the liquor to the upper end of the chute, and means communicating with the lower portion of the chute for injecting a heating medium and heating the liquor therein, said heating means being so located adjacent the path of travel of the textile material, as to provide an unobstructed passage.

5. Apparatus for treating textile material comprising a chute having an upwardly extending receiving end and an upwardly extending delivery end, said chute being constructed to hold treating liquor, means for withdrawing liquor from the lower portion of the chute and directing the liquor in a plurality of directions against the material entering the chute, and means communicating with the chute for injecting a heating medium and heating the liquor therein, said heating means being so located adjacent the path of travel of the textile material, as to provide an unobstructed passage.

6. Apparatus for treating textile material comprising a chute having an upwardly extending receiving end and an upwardly extending delivery end, said chute being constructed to hold treating liquor, means for injecting a heating medium and for heating the liquor in the chute, said heating means being so located adjacent the path of travel of the textile material, as to provide an unobstructed passage, and means for indicating the temperature of the liquor at the receiving and at the discharging ends thereof.

7. Apparatus for treating textile material, comprising a chute having an upwardly extending receiving end, and an upwardly extending delivery end, said chute being constructed to hold treating liquor, and means communicating with the chute for introducing steam into the liquor, comprising a perforated steam pipe so located adjacent the path of travel of the material as to permit an unobstructed passage for said material.

8. Apparatus for treating textile material, comprising a chute having an upwardly extending receiving end, and an upwardly extending delivery end, said chute being constructed to hold treating liquor, and means communicating with the chute for introducing steam into the liquor, comprising a perforated steam pipe so located adjacent the path of travel of the material as to permit an unobstructed passage for said material, said chute having a perforated wall between said pipe and the path of travel of said material.

9. Apparatus for treating textile material comprising a chute having an upwardly extending receiving end, and an upwardly extending delivery end, said chute being constructed to hold treating liquor, and having a perforated wall, a casing mounted exteriorly of said chute and encasing the perforated section of the wall, and means in said casing for introducing steam into the chute and maintaining the liquor hot.

10. Apparatus for treating textile material comprising a chute having an upwardly extending receiving end, and an upwardly extending delivery end, said chute being constructed to hold treating liquor and having a plurality of perforated walls, a casing mounted exteriorly of said chute and encasing all of the perforated sections of the wall, and means in said casing for introducing steam into the chute and maintaining the liquor hot.

11. Apparatus for treating textile material comprising a chute having an upwardly extending receiving end, and an upwardly extending delivery end, said chute being constructed to hold treating liquor, and having a perforated wall, a casing mounted exteriorly of said chute and encasing the perforated section of the wall, and means in said casing for introducing steam into the chute and maintaining the liquor hot, the perforated section being effective to space the textile material from the steam introducing means thereby to provide a free, unobstructed passage for the material.

12. Apparatus for treating textile material comprising a chute having an upwardly extending receiving end and an upwardly extending delivery end, said chute being constructed to hold treating liquor, means for maintaining the liquor at a predetermined level, and heating means to inject a heating medium to the liquor, said heating means being located adjacent the path of travel of the textile material, thereby to provide an unob-

structed passage, said chute having means to prevent contact of the material with said heating means.

13. Apparatus for treating textile material comprising a chute having an upwardly extending receiving end, and an upwardly extending delivery end, said chute being constructed to hold treating liquor and jacketed means carried by and communicating with the chute for conducting steam into the chute to heat the liquor, said chute having means to prevent contact of the material with said heating means.

In witness whereof, I have hereunto set my hand this 31st day of July, 1928.

WILLIAM L. CONRAD.