Aug. 2, 1949. H. M. HABERMAN 2,477,741

ELECTRICAL SWITCH

Filed Oct. 23, 1946 3 Sheets-Sheet 1

Fig. 1a

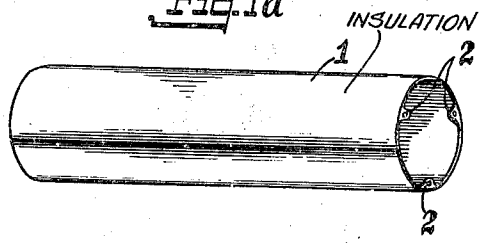

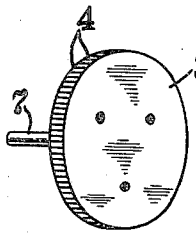

Fig. 1b

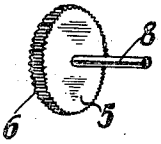

Fig. 1c

Fig. 1e

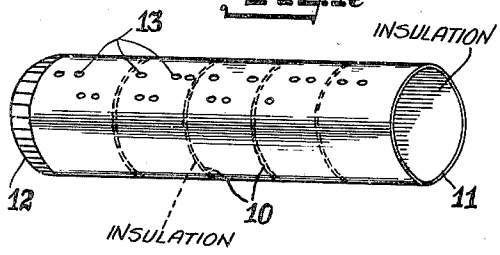

Fig. 1d

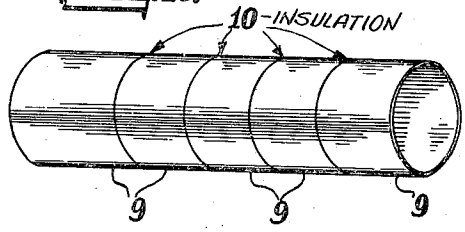

Fig. 1f

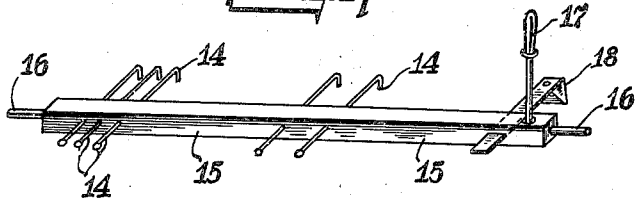

Fig. 2

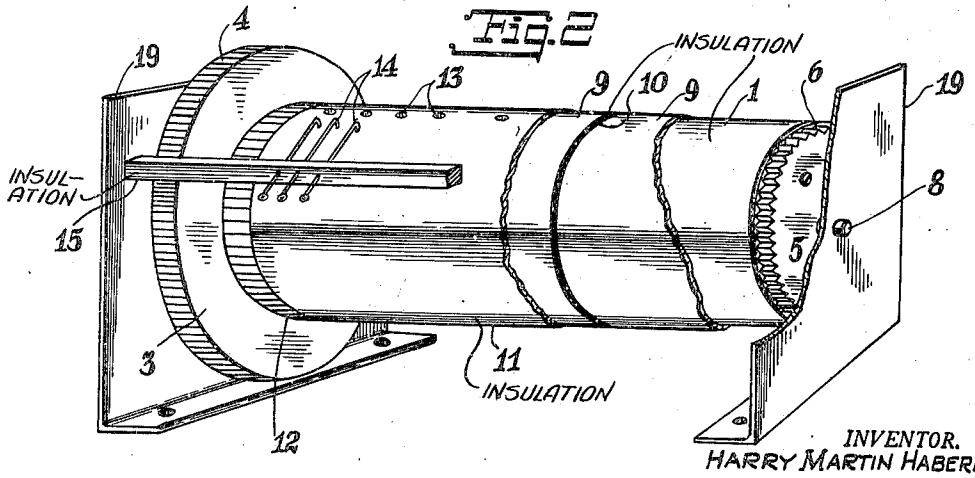

INVENTOR.
HARRY MARTIN HABERMAN

BY Roger Williams
Attorney

Aug. 2, 1949. H. M. HABERMAN 2,477,741

ELECTRICAL SWITCH

Filed Oct. 23, 1946 3 Sheets-Sheet 2

Fig. 3

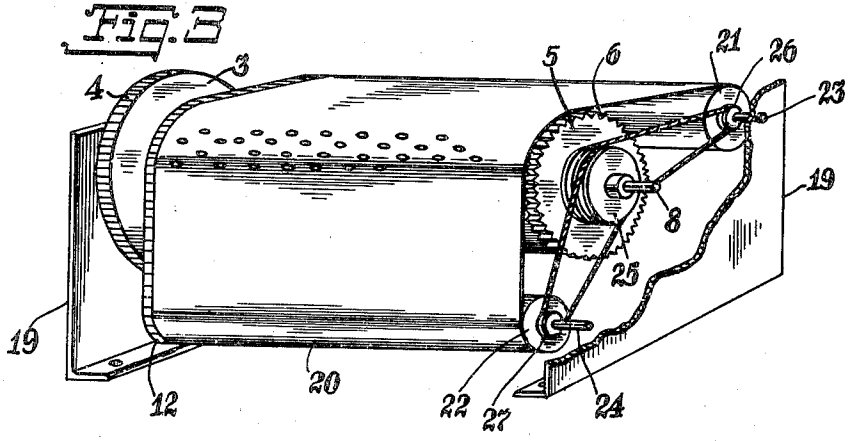

Fig. 4

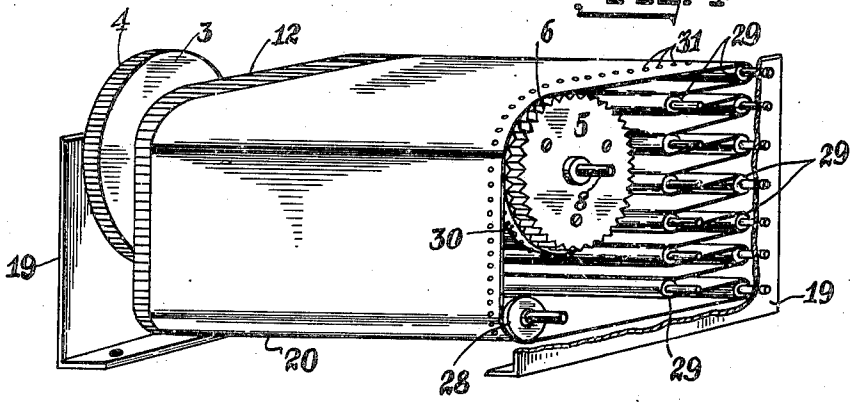

Fig. 5

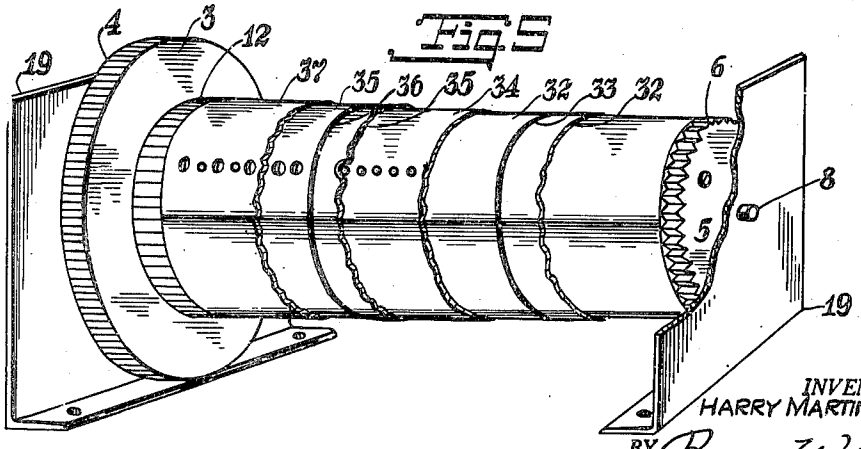

INVENTOR.
HARRY MARTIN HABERMAN
BY Roger Williams
Attorney

Aug. 2, 1949. H. M. HABERMAN 2,477,741

ELECTRICAL SWITCH

Filed Oct. 23, 1946 3 Sheets-Sheet 3

Fig. 6

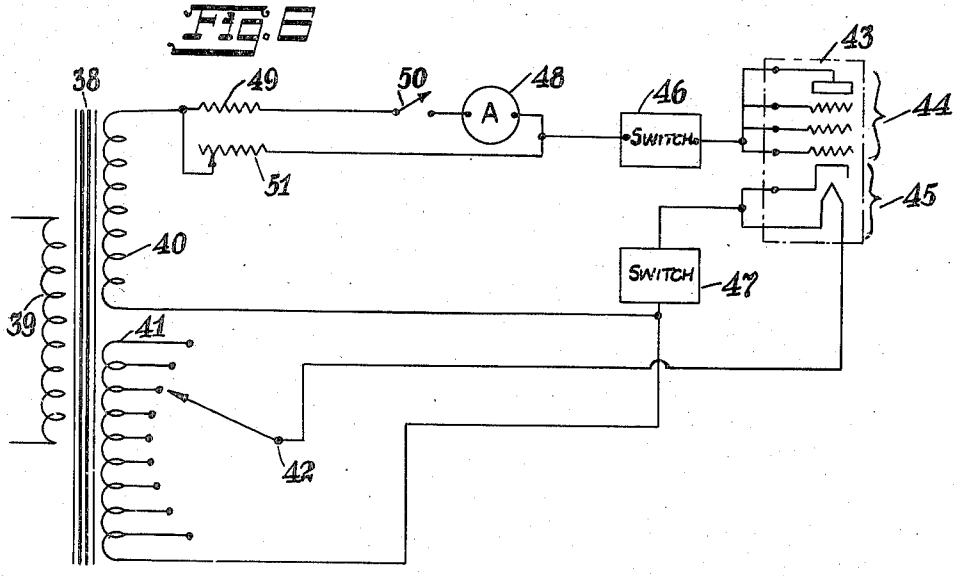

Fig. 7

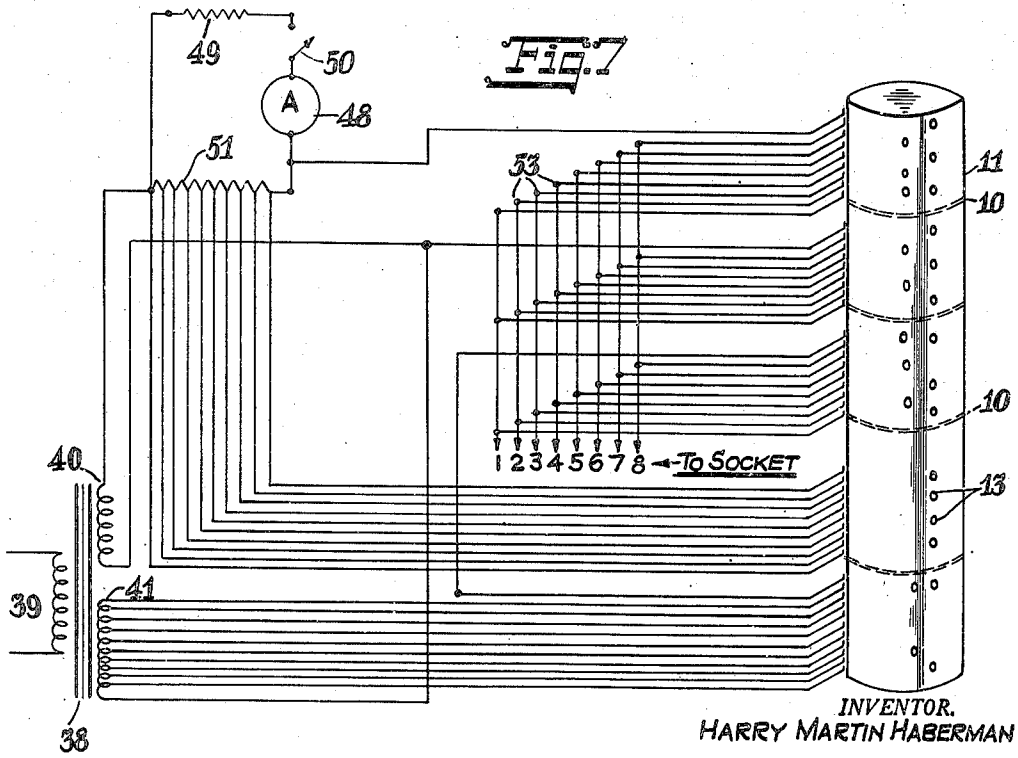

INVENTOR.
HARRY MARTIN HABERMAN

BY Roger Williams
Attorney

Patented Aug. 2, 1949

2,477,741

UNITED STATES PATENT OFFICE

2,477,741

ELECTRICAL SWITCH

Harry M. Haberman, New York, N. Y.

Application October 23, 1946, Serial No. 705,163

11 Claims. (Cl. 200—46)

1

This invention relates to electrical switching devices of a type which may be termed "semi-automatic," wherein a single relatively simple manual adjustment puts into operation a relatively large number of electrical connecting devices. Switches of this type enable a large number of predetermined and complex circuits to be set up with great rapidity and without the possibility of the occurrence of errors, this latter possibility being an inescapable problem when an operator is called upon to individually adjust a large number of switches, in order to set up a desired circuit.

While the switch of this invention may be employed in many cases where a plurality of complex circuits, if of a predetermined character, must be set up selectively or consecutively, this switch is particularly adapted for use in connection with devices for the electrical testing of the condition of the electronic discharge devices commonly referred to as tubes or valves.

In the following description of the device of this invention, it is shown and described as used in connection with a tube testing device of the character just mentioned. It is believed that the invention may the more clearly be comprehended when thus concretely and specifically applied. However, it is to be understood that this invention is by no means confined to the use thereof in connection with tube testing devices.

In the setting up of complex electrical circuits, one of the simplest operations to be performed is the connection of a given conductor to a predetermined one of several points, such points bearing different voltages, or representing different values of resistance. One example of this particular type of switching is represented in a tube tester by the connection of the heating element of a tube to a source of electrical energy yielding a voltage corresponding to that upon which the particular tube is designed to operate. For example, electronic tubes used in connection with radio broadcast receiving devices are designed in many different types, some of which require voltages of the order of one volt while others are designed to have the heating element connected directly across the conventional electrical power supply of 110–120 volts. It can accordingly be seen that the accidental application of a lower voltage to a tube heater, than that for which it is designed, will cause the tube to respond by showing insufficient emission, while the application, for example, of 110 volts to a tube heater designed for 6 volts will result in a burning out of the tube heater, so that the tube will

2

in this case also respond to the test as being defective, although it might not have been defective before the tube was placed in the testing instrument. It is a matter of common knowledge that this last mentioned occurrence is a far from uncommon one in the tube testers now widely employed.

In the majority of tube testing devices now in use the operator is compelled to turn at least five or six switches to different positions, and the correct position of each is ascertained only by reference to some key chart upon which the different types of tubes are indicated. The reading of this chart and the transference of the values there given to the various switches of the tube tester introduce still further chances for errors arising from the human factor. Accordingly, a very great number of tubes are irretrievably damaged when they are subjected to test in devices of this type, due to the imposition of abnormally high voltages upon the heating circuit, or in some cases, upon other circuits of the tube.

Another type of switching which is demanded by devices such as tube testers is the interconnection of certain terminals upon the tube socket and the further connection of such terminals to the proper sources of current and to the indicating meters and other elements of the tube tester. This type of switching is much more complex than that previously described, since one type of tube may have different internal elements brought out to the same tube prong than the elements which may be brought out to a corresponding prong in another type of tube. This means that a switch must be able not only to group socket connections in one manner for one type of tube and in another manner for a different type, but must be able to connect such groupings to differing external conductors, according to the particular type of tube under test.

In order to accomplish this type of switching recourse has previously usually been had to extremely complex switches, either to the type employing a large number of arms mounted upon a single rotary shaft, each arm sweeping over its own set of fixed contacts, or else to an assembly of cam type switches, mechanically interlinked to one or more mechanical controls. Complex switches of this type are not only expensive, because of the elaborate assembly work required, but are prone to failures arising from this complexity of construction and the multiplicity of contacts needed.

Still a third type of switching which is especially necessary in tube testers of the type where-

in the final reading of the condition of the tube is indicated upon an instrument having a single scale of the species known as "Good-Bad," is the switching of an appropriate anodic load resistor into the circuit which includes the indicating meter and the elements of the tube which function as anodes during the testing. The purpose of this load resistor is to maintain the anodic current at a value where a good tube of a particular type will give a meter reading on the portion of the scale marked "Good," and vice versa.

The switching device of the present invention provides a relatively simple arrangement whereby a single manual adjustment causes a large number of individual contacts to be made simultaneously and without chance of making the wrong connection, by a use of a pre-formed key, this key taking the form of a strip of insulating material having therein a number of perforations coded to correspond with the connections which it is desired to make for any given switching operation. One or more of such keys may be employed and in some forms of this invention perforations in strips of conductive materials may additionally be employed. The alignment of a given position of the key strip with a plurality of wire-like contact springs, which can enter the perforations in the strip, since every perforation exists directly opposite a given contact, suffices to determine the setting up of a large number of complex circuits, which may then be thrown into simultaneous operation by moving the contacts so that they can enter the perforations and will make connections with an electrical conductor lying upon the other side of the key strip.

In a variant form of the switch of this invention, especially suited for use where a certain fixed number of elements, such as the various electrodes of a tube, are to be connected to a relatively small number of external circuit elements, the necessity of employing an unduly elongated switch is obviated by the employment of a plurality of insulating key strips, interleaved with similar strips of conductive material, so that the length of the switch need be only sufficient to correspond with the width of a single strip. In this case the contacts just mentioned can reach a lower strip of conductive material by passing through perforations in the other strips, both insulating and conductive, which overlie the conductive strip at which connection is to be made. Such overlying perforations, especially those in the strips of conductive material, are made of sufficient size so that the contacts can pass through such larger sized openings without touching any of the metallic strips, until they reach a strip which is not so perforated.

One object of this invention is to provide an electrical switching device wherein the setting of a single mechanical element will allow the making of a relatively large number of contacts, by the movement of a single actual switching element.

Another object of this invention is to provide semi-automatic switching means which will allow the setting up of complex electrical circuits without demanding upon the part of the operator any attention other than the proper alignment of a single scale of indicia, whereon each circuit to be set up is denoted by a single indicium.

Yet another object of this invention is to provide a switching device for use in tube testers wherein the operator is called upon to make only the single adjustment of aligning upon a scale a single indicium, such as the code designation of the tube to be tested.

Still another object of this invention is to provide a semi-automatic switch for use in tube testers, wherein the application of excessive potentials to any portion of a tube to be tested is possible only by gross carelessness on the part of the operator.

Another purpose of this invention is to provide an electrical switch by means of which a great number of elements, such as the electrodes of a tube, may be interconnected with one another in any desired combination, and such combination may be connected to external circuit elements carrying appropriate potentials, these connections demanding only a single setting of the switch.

Yet another purpose of this invention is to provide a switch for electronic tube testers, in which a single setting of the switch not only connects the various tube elements to suitable potentials and indicating meters, but such setting simultaneously and automatically varies the effective value of external resistances associated with the indicating meters.

Still another purpose of this invention is to provide a multiple electrical switch of relatively simple form, having comparatively few elements, and not readily subject to mechanical or electrical failure.

An additional object of this invention is to provide an electrical switching device in which the circuits to be set up are determined by pre-formed perforations in one or more key strips, such perforations determining the functioning or non-functioning of the contacts of the switch proper.

An additional purpose of this invention is to provide a switching device capable of making a large number of electrical connections and thereby setting up a number of electrical circuits limited in number only by the laws of permutation and combination.

A further object of this invention is to provide a switching device which can set up a large number of circuits simultaneously, and in which such circuits may be determined and altered, merely by varying the perforations in a key strip fed into or part of the switch proper.

Further purposes and advantages of this invention will be apparent to those skilled in the art from the following specification, and from the drawings hereunto annexed.

In the drawings:

Figs. 1*a*, 1*b*, 1*c*, 1*d*, 1*e*, and 1*f* are representations in perspective of the component elements of a switch according to this invention,

Fig. 2 is a partly broken away perspective showing of the elements of Fig. 1 as completely assembled,

Figs. 3 and 4 are partly broken away perspective views of other embodiments of this invention especially suited for setting up a very great number of circuits,

Fig. 5 is a variant embodiment of this invention, of relatively great physical compactness,

Fig. 6 is a schematic representation of an electronic tube tester illustrating the various circuits set up therein, and

Fig. 7 is a partly schematic representation of one form of this invention, as applied to an electronic tube tester of the type shown in Fig. 6.

Reference is now made to Figs. 1*a–f*, and to Fig. 2. In Fig. 1*a* is shown an elongated tube 1 provided with suitable lugs 2 at each end thereof. This tube is formed of a suitable insulating material, such as plastic or the like. In Fig. 1*b* is shown a disc 3 formed of any suitable rigid material, preferably of sufficient thickness to allow

the inscription upon the periphery thereof of indicia 4. The diameter of disc 3 is sufficiently great to allow the indicia to be made of a size sufficiently great to secure legibility, such diameter usually being somewhat greater than that of the tube 1. In Fig. 1c is shown another disc 5, of any suitable material, provided upon the periphery thereof with teeth 6 equal in number to the total number of distinct and separate circuits to be set up by the switch. Discs 3 and 5 are firmly fastened to the lugs 2 at the respective ends of tube 1, by screws or other suitable means. These discs are also provided with shafts 7 and 8, respectively, so that when assembled upon tube 1, there is formed a hollow rotatable cylinder. In Fig. 1d are shown a number of shorter hollow cylinders 9 formed of a suitable conductive material such as copper, brass or the like. These cylinders are formed of a size to fit snugly over tube 1, so as to rotate therewith. Each cylinder 9 is insulated from the adjacent cylinder by an annular insulator 10. Each cylinder 9 in this fashion constitutes a completely insulated electrical element.

In Fig. 1e is shown another hollow tube 11 of suitable insulating material such as plastic or the like, of a diameter sufficient to fit snugly over the cylinders 9, and of a length approximately that of tube 1. At one end of tube 11 is provided a narrow section 12, upon which the code designations of the circuits to be set up may be printed, in lieu of such indicia being inscribed upon the periphery of disc 3, as previously described. Extending in longitudinal lines or rows along tube 11 are a series of perforations 13, passing completely through the tube, and of a size sufficient to allow the passage therethrough of contact making pins or points, later to be described. In Fig. 1f are shown a series of contact pins 14, all inserted in an elongated supporting bar-like member 15, of insulating material. The pins 14 may be made of metallic wire such as copper, brass or other material having an adequate degree of resiliency and these pins may optionally be tipped with platinum, tungsten or other materials of a type suitable for making electrical contacts, as well-known in the art. Supporting member 15 is provided at each end with pivots 16 so that the rotation of member 15 will cause the bent-over ends of contact pins 14 to press upon the surface of tube 11, when desired. A suitable handle 17 affords control of the rotary motion of supporting member 15 which is mounted parallel to the cylinder assembly. At a point directly over the teeth 6 of disc 5 is provided a pawl 18, suitably formed for engagement with teeth 6 and constructed of suitably resilient material such as spring metal. While only a limited number of contact pins have been indicated, it is to be understood that such pins are provided of a number sufficient to accommodate all the circuits which are to be set up by the switch, usually extending along the entire length of the rotary cylinders.

Referring now especially to Fig. 2, the elements just described are here shown assembled upon suitable end supports 19, the various tubes rotating as a unit upon shafts 7 and 8, which latter extend through suitable bearing apertures in end members 19.

The operation of the switch just described is extremely simple. The contact pins may be considered as existing in groups, although such groups need not be physically spaced apart. A certain number of pins will be located above a given metallic cylinder 9, and all of these pins

which find perforations in cylinder 11 beneath them, will be able to make contact with a single cylinder 9. Therefore they will all be interconnected. If only certain pins are to be connected, no perforations are provided beneath those pins which are not to be so connected. If a pin is to be connected alternatively to more than one cylinder, it is paralleled with other pins lying above other cylinders, somewhat in the fashion of a telephone multiple board. The disc 3 is first rotated until the desired indicium is opposite some suitable reference mark. The perforations corresponding to the desired circuits will then lie beneath the various contact pins. Movement of lever 17 will rotate support 15 through an arc sufficient to depress all the contact pins until they touch the cylinder assembly. Further pressure upon lever 17 will slightly flex those pins which have beneath them no perforation, while at the same time forcing the tips of the other pins through the perforations in the outer cylinder 11, until they touch the cylinders 9. Simultaneously, pawl 18 will seat between certain of the teeth 18, thus making an accurate angular alignment of the cylinder assembly, in case that the manual setting of the desired indicium has not been precise.

In order to avoid making all the connections at different times, which may well happen unless all the contact pins are in very accurate alignment, one or more external switches may be used in certain circuits, so that all the connections of the automatic switch are made before the circuits to certain devices, such as meters, are finally closed by the closure of such external switches.

Referring now to Fig. 3, the main composite cylinder, supports therefor, and end discs are the same as already described, except that instead of cylinder 11, there is substituted a band 20, of flexible insulating material, winding from an upper cylinder or roller 21 to a lower cylinder or roller 22. These latter rollers turn upon respective shafts 23 and 24, rotating in end supports 19. For clarity, the pin contacts and supporting bar are here omitted, as they function exactly as in the form of the invention previously described, the sheet or band 20 taking the place of cylinder 11, and being similarly perforated. In this form it is preferred that the indicia be placed directly upon the band 12, at the left end of sheet 20, so that any possible angular displacement between disc 3 and the bank shall not result in false indicia being displaced. Additionally, in this form, the number of indicia is too great to be accommodated upon the disc 3. Double pulleys 25, on shaft 8 are belted to pulleys 26 and 27 respectively, so that all three cylinders will revolve simultaneously. In order to compensate for differences of diameter, pulleys 26 and 27 are of the well known uni-directional drive type, oppositely disposed so that in one direction only one small cylinder is positively driven by shaft 8, and the other roller rotates idly. Clutch devices to give this result are well known in the mechanical art, so that detailed description thereof is unnecessary.

To further compensate for difference of diameters in the cylinders, a drive of the friction type, capable of slipping, may be used and springs may be used to take up any slack of the band, such mechanical expedients being well-known in the art. In this form of switch, the band may be made long enough to carry thereupon, in the form of rows of perforations, a very great num-

ber of coded circuit settings, thereby greatly extending the utility of the device.

In Fig. 4, the band **20** is made continuous, passing over an idler roll **28**, and a series of staggered idler rolls **29**, so as to take up the desired length of band in relatively small compass. Disc **5** is here additionally provided with sprockets **30**, engaging apertures **31**, formed in one end of the band **20**, thereby affording a positive drive. The electrical functioning of this form is precisely as that already described. If sufficient length will be thereby secured any or all the rollers **29** may be omitted, so that the band may be shortened to a single endless belt passing over the one idler roll **28**.

In the variant form of switch shown in Fig. 5, the cylinder **1** is made shorter. A first series of cylinders **32**, of metal, separated from one another by insulating rings **33**, fit snugly upon cylinder **1**. Over these metallic cylinders is tightly fitted another cylinder **34**, of insulating material. Over this last are other metal cylinders **35**, separated by insulating rings **36**. Finally a perforated cylinder **37** of suitable insulating material covers the outside of the cylinder assembly.

As already described, when it is desired that a contact pin engage one of the inner metallic cylinders, rather than an outer one, suitably larger perforations are made in all the cylinders, both metallic and insulative, which overlie the desired cylinder so that pins may pass through the larger openings without touching the edges thereof. This form of construction avoids the need for a number of contact pins, multipled together in order to be able to contact different cylinders by a single contact pin, thereby shortening the switch as a whole, and reducing the number of pins needed.

As one example of apparatus of a type in which the switch of this invention is useful, Fig. 6 shows an electronic tube tester. A transformer **38**, has the primary **39** connected to a suitable power source. Secondary **40** furnishes a potential sufficient for anodic emission current testing, usually around 30 volts. Tapped secondary **41** affords, via switch **42**, the requisite variable potential to heat the cathode of the tube under test. This tube, **43**, has a certain number of elements, **44**, interconnected to function as a single anode, and others, **45**, interconnected to function as a single cathode. In order to perform this grouping, switches schematically indicated at **46** and **47** are used, and these are usually complex in character, as previously described. The emission meter **48** is put in series with an anode load resistor **49**, via switch **50**, and variable resistor **51** is adjusted as already described, to give a meter reading to accord with the characteristics of the particular type of tube under test.

In Fig. 7 is shown the connection of the switch of this invention to a tester of the type of Fig. 6, so that all the various switching operations just mentioned can be performed by a single setting of the switch. The outer cylinder **11** has indicated thereupon, by means of dotted circles, the insulating rings **10** which divide the various circuit sections constituted by the individual metallic cylinders **9**, which lie therebeneath. The various sections of contact pins are shown in separated groups, it being understood that such spacing may be purely electrical in character. At **53** are shown the multiple bus bar connections of the upper three sets of contact pins, so that

they may contact any one or more of the upper three metallic cylinders. The pins each represent an element of a tube, as indicated by the legend "To socket," there usually being not more than eight tube elements. If a greater number is present, more pins and more multiple bus bars are provided accordingly. Thus the perforations in cylinder **11** determine what elements shall be interconnected, and also what ones shall be connected to the meter and transformer leads, which are themselves connected to certain pins. The perforations above the fourth section allow various portions of resistor **51** to be short circuited, so that the remaining effective resistance thereof shall be of the desired value. The lowest section has the pins connected to the various voltage taps of secondary **41**, and thereby determines the cathode heating voltage applied to the upper contact pin of the third section, and thence to the proper socket connection.

Many variations of the above described forms of this switch are possible. For example, the method of employing a series of concentric cylinders, alternately of conductive and insulative material, readily suggests that the same principles may be applied to the form of this switch wherein a continuous band of insulative material is employed. To accomplish this, the cylinder may be provided with an outer perforated insulative sheath, of the type shown in Fig. 2. The band of insulative material may be provided with a lower layer of conductive material, for example, a sheet of thin metal may be firmly fastened to the lower surface of the insulative band, so as to move simultaneously therewith. If only the insulative band is perforated, the spring contact entering such perforations will be interconnected by the sheet metal on the lower side of this band. If both the insulative band and the sheet of metal are provided with larger coincidental perforations, a spring contact can pass through such perforations, without making contact with the metal sheet, and is free to enter a perforation provided in the outer insulative sheath of the cylinder proper, and to make contact with the metallic portion of the cylinder.

While I have shown the switch of this invention as applied to an electronic tube tester of the emission type, it is apparent that the switch is equally applicable to a tube tester of the transconductance type. Likewise, this switch may be applied to many other uses than tube testers.

While there have been shown and described certain embodiments of this invention it is to be understood that many variations thereof will be apparent to those skilled in the art and accordingly the scope of this invention is limited only by the hereunto appended claims.

What I claim as new and desire to secure by Letters Patent of the United States is:

1. An electrical switch including a rotatively mounted metallic cylinder, a key strip of insulation closely overlying at least a longitudinal band along said cylinder and having therein a series of perforations corresponding to connections to be made, a series of spring contacts normally insulated from said cylinder and from one another, means for mounting said contacts so that they are normally held substantially equidistantly spaced away from said key strip but can be simultaneously and at a substantially equal velocity moved onto the portion of said key strip overlying said band of said cylinder, and make contact therewith along a longitudinal band thereof including said perforations,

whereby said perforations admit certain of said contacts and allow them to make contact with portions of said metallic cylinder lying along said longitudinal band, and whereby said key strip may be moved relatively to said contacts, when said contacts are spaced away from said key strip, without any connections being made between said contacts and said cylinder.

2. A switch for setting up predetermined electrical circuits, including a cylinder of conductive material, means for mounting and rotating said cylinder, a key strip of insulative material closely covering at any one instant at least a longitudinal and relatively narrow line along said cylinder, means whereby rotation of said cylinder causes said key strip to move progressively in a direction instantaneously at right angles to the axis of the cylinder, said key strip having therein a series of perforations arranged in rows extending longitudinally of said cylinder, an external rotatable bar of insulative material arranged parallel to the axis of said cylinder, a series of spring contacts, each having a relatively small end portion, supported along said bar at intervals thereupon, and means for rotating said bar around its own axis so as to force said spring contacts against said strip, whereby certain of said contacts enter said perforations and make contact with said cylinder, said electrical circuits being predetermined by the arrangement of the perforations in said key strip, and whereby said key strip may be moved relatively to said contacts, when said contacts are spaced away from said key strip, without any connections being made between said contacts and said cylinder, said rotatable bar being pivoted at both ends thereof and said contacts being substantially equidistant from said strip when not in contact therewith and moving over substantially equal distances when said bar is rotated, so as to make substantially simultaneous contacts with said strips.

3. An electrical switch comprising a rotatably mounted composite cylinder formed of an insulative cylindrical core, an inner hollow metallic cylinder mounted so as to overlie said core concentrically with the axis thereof, an outer hollow cylinder of insulative material mounted so as to overlie said metallic cylinder and to be concentric with said core, having a length substantially identical therewith and also being provided with parallel rows of longitudinally disposed perforations thereupon, each row corresponding to a plurality of connections to be made, an external rotatable bar of insulative material mounted parallel to the axis of said cylinder, a series of contacts formed of spring metal and having one end of a size small enough to enter said perforations, said contacts being mounted along said bar at points of which at least some correspond to said perforations, so that rotation of said bar forces said contacts against said outer cylinder and causes contacts encountering perforations in said cylinder to enter therein and to make contact with said metallic cylinder lying therebeneath.

4. An electrical switch according to claim 3, additionally including at least one annular member of insulative material concentrically mounted upon said core so as to sub-divide said metallic cylinder into a plurality of electrically discrete sections, whereby said spring contacts are interconnected in discrete groups.

5. A rotary switch including a first insulative cylindrical core, a first metallic cylindrical sheath mounted over said core, a second insulative cylindrical sheath closely embracing said first metallic sheath and being provided with perforations in rows longitudinally disposed therealong, a series of mutually insulated spring contacts independently mounted along a line parallel to said core, but externally thereto, each contact having an end portion movable radially with respect to said core, and means whereby all said contacts can be simultaneously moved in a radial direction towards said core so as to engage said second insulative sheath, certain contacts entering said perforations and making contact with said first metallic sheath.

6. A switch according to claim 5, also including a second metallic cylindrical sheath closely embracing said second insulative sheath and a third perforated insulative cylindrical sheath closely embracing said second metallic sheath, said second metallic sheath being provided at predetermined points with perforations substantially larger than the end portions of said contact, whereby certain other contacts, when radially moved, can pass through both said third insulative sheath and said second metallic sheath, while failing to make contact with said second metallic sheath, and can pass through the perforations in said second insulative sheath and thereby make contact with said first metallic sheath, while at the same time contacts not encountering perforations in said second metallic sheath will make contact therewith.

7. An electrical switch comprising a rotatably mounted composite cylinder formed of an insulative cylindrical core, an inner hollow metallic cylinder mounted so as to overlie said core concentrically with the axis thereof, a belt of insulative material making at least tangential contact with the periphery of said composite cylinder, means for moving said belt tangentially to said cylinder and co-incidentally with the rotation of said cylinder, said belt being provided with parallel rows of longitudinally disposed perforations thereupon, each row corresponding to a plurality of connections to be made, the rotation of said cylinder causing successive rows of perforations to make tangential contact therewith, an external rotatable bar of insulative material mounted parallel to the axis of said cylinder, a series of contacts formed of spring metal and having one end of a size small enough to enter said perforations, said contacts being mounted along said bar at points of which at least some correspond to said perforations, so that rotation of said bar forces said contacts against said belt and causes contacts encountering perforations in said belt to enter therein and to make contact with said metallic cylinder lying therebeneath.

8. An electrical switch according to claim 7, in which said belt is of the endless type, and also including at least one idler roll disposed parallel to said cylinder, said belt passing over said roll.

9. An electrical switch according to claim 7, also including two feed rolls externally disposed parallel to said cylinder, said belt winding alternately from one feed roll to the other, and means whereby said feed rolls are alternately driven from said cylinder, according to the direction of rotation of the cylinder, the roll not so driven functioning as an idler roll.

10. An electrical switch according to claim 3, in which said cylindrical core is provided at one end with a toothed ratchet wheel, and said rotatable bar carries a pawl so located as to engage

said ratchet wheel, each tooth of said wheel being so located relative to said pawl that mutual engagement thereof will position one row of said perforations directly beneath said contacts, whereby alignment for contact making is automatically secured, when said bar is rotated.

11. An electrical switching device including a rotatable cylinder having at least the peripheral surface thereof formed of insulating material, a plurality of metallic sheaths concentrically embracing said cylinder and longitudinally spaced therealong, means for insulating adjacent sheaths from one another, a first insulative sheath closely embracing all said metallic sheaths and having therein perforations at predetermined positions, a plurality of secondary metallic sheaths closely embracing said first insulative sheath, said secondary metallic sheaths being insulated from each other and being provided with perforations of a predetermined size, a series of discrete contact members having end portions smaller than said last mentioned perforations, and means resiliently forcing said contact members against said sheaths, and an outer perforated insulative sheath, whereby predetermined contact members

can at least partly pass through said outer insulative and said secondary metallic sheaths without contacting said secondary sheaths, but contacting said first metallic sheath and thereby being interconnected, while contacts not encountering perforations in said secondary metallic sheath will be interconnected thereby.

HARRY M. HABERMAN.

REFERENCES CITED

The following references are of record in the file of this patent:

UNITED STATES PATENTS

Number	Name	Date
969,646	Meredith	Sept. 6, 1910
1,214,540	Greene	Feb. 6, 1917
1,586,436	Barrundia	May 25, 1926
1,766,861	Wakefield	June 24, 1930
1,902,085	Lee et al.	Mar. 21, 1933
2,229,100	Lapsley	Jan. 21, 1941

FOREIGN PATENTS

Number	Country	Date
384,653	Great Britain	Nov. 28, 1932