W. D. WRIGHT.

FENDER OPERATING MECHANISM.

APPLICATION FILED DEC. 8, 1906.

1,068,474. Patented July 29, 1913.

2 SHEETS—SHEET 1.

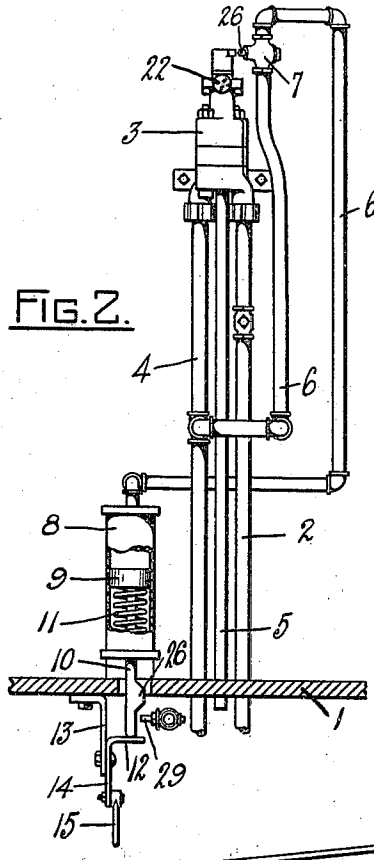

FIG. 2.

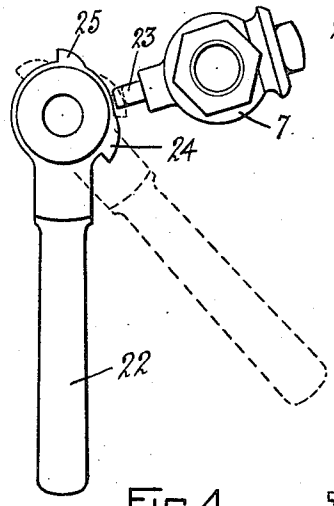

FIG. 4.

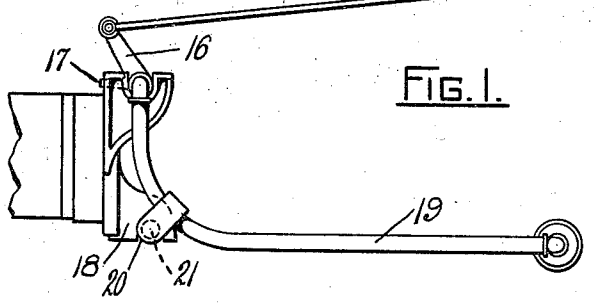

FIG. 1.

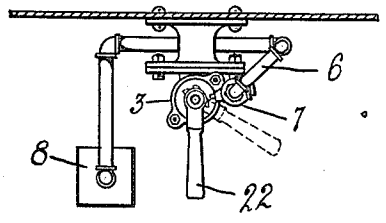

FIG. 3.

WITNESSES.

James L. Thurston

Catherine G. Bradley.

INVENTOR.

William D. Wright,

BY. Wilmarth H. Thurston,

ATTORNEY.

COLUMBIA PLANOGRAPH CO., WASHINGTON, D. C.

W. D. WRIGHT.

FENDER OPERATING MECHANISM.

APPLICATION FILED DEC. 8, 1906.

1,068,474.

Patented July 29, 1913.

2 SHEETS—SHEET 2.

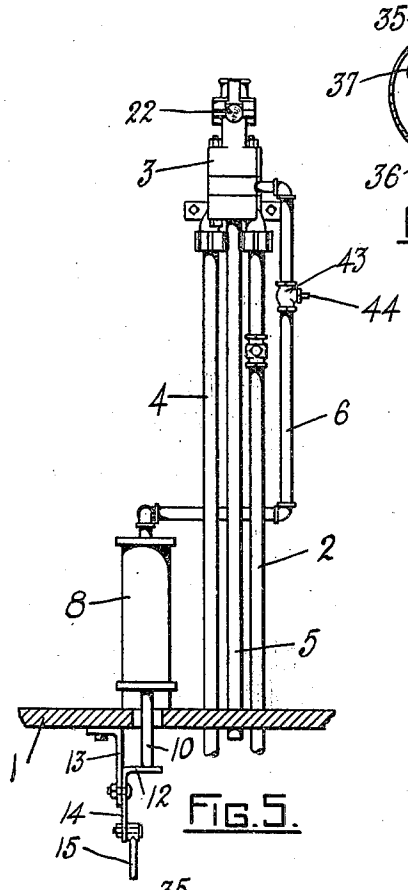

FIG. 5.

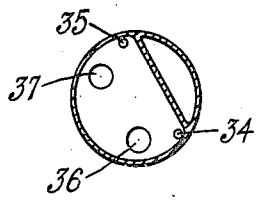

FIG. 7.

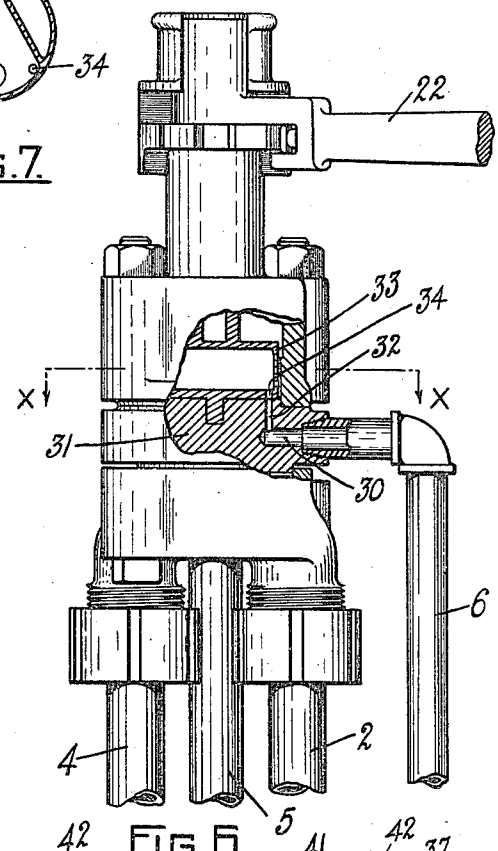

FIG. 6.

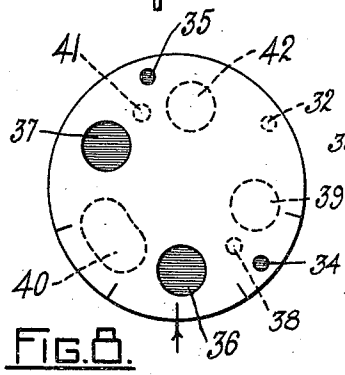

FIG. 8.

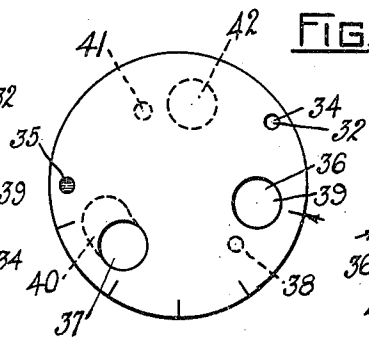

FIG. 9.

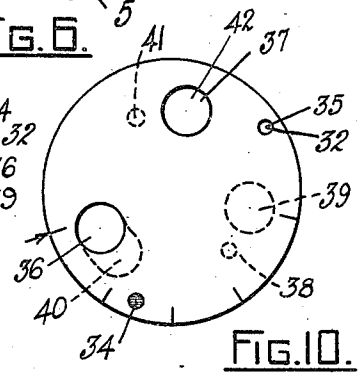

FIG. 10.

WITNESSES.

James H. Thurston

Catherine G. Bradley.

INVENTOR.

William D. Wright,

BY Wilmarth & Thurston,

ATTORNEY.

UNITED STATES PATENT OFFICE.

WILLIAM D. WRIGHT, OF PROVIDENCE, RHODE ISLAND.

FENDER-OPERATING MECHANISM.

1,068,474. Specification of Letters Patent. Patented July 29, 1913.

Application filed December 8, 1906. Serial No. 346,829.

To all whom it may concern:

Be it known that I, WILLIAM D. WRIGHT, of Providence, in the county of Providence and State of Rhode Island, have invented certain new and useful Improvements in Fender-Operating Mechanism; and I do hereby declare the following specification, taken in connection with the accompanying drawings, forming a part of the same, to be a full, clear, and exact description thereof.

The invention relates to that class of railway-cars which are equipped with fenders and with air-brakes.

The object of the invention is to insure that the fender shall be released or otherwise operated whenever there is an emergency application of the air-brakes, and without any separate or independent manipulation by the engineer or motorman.

To that end the invention consists primarily in providing means whereby the emergency application of the air-brakes will also serve to release or otherwise operate the fender, and so that the fender will always be released or operated whenever there is an emergency application of the air-brakes.

A further feature of the invention consists in actuating the fender operating mechanism by fluid pressure, and in controlling such fluid pressure by the emergency application of the air-brakes. In the drawings two arrangements are shown for thus controlling the fluid pressure to actuate the fender-operating mechanism. In one arrangement, which is adapted for use in connection with an air-brake controlling valve (commonly known as the engineer's valve) such as heretofore employed, and which may be applied to such controlling valves already installed upon cars, a valve separate from said controlling valve is employed, such separate and supplemental valve being arranged to be operated by the movement of said controlling valve. In the other arrangement, which involves the employment of a controlling valve of a somewhat different construction, the fluid pressure to actuate the fender-operating mechanism is controlled by the controlling valve itself, said controlling valve being provided with additional ports for this purpose.

The invention further consists in the combinations and arrangements of parts hereinafter described and claimed.

Referring to the drawings, Figure 1 is a side elevation of a portion of the platform of a railway car showing the controlling valve of the air-brake system and the piping therefor with the present invention applied thereto, and showing also a portion of one of the trucks with a fender supported thereon. Fig. 2 is a front elevation of the apparatus shown in Fig. 1 with the connecting rod leading to the fender broken away. Fig. 3 is a plan view of the same. Fig. 4 is a detail on an enlarged scale. Fig. 5 is a front elevation corresponding to Fig. 2, but showing a modified arrangement. Fig. 6 is a front elevation partly in section on an enlarged scale showing the construction of the air-brake controlling valve employed with the modification shown in Fig. 5. Fig. 7 is a section through the rotary member of the controlling valve taken on the line x—x of Fig. 6. Figs. 8, 9 and 10 are diagrammatic views on a still larger scale showing the different positions of the controlling valve.

1 represents the platform of a railway car, which it will be understood is provided with a system of air-brakes, 2 is the pipe leading from the reservoir of the air-brake system.

3 represents as a whole the air-brake controlling valve.

4 is the train pipe or pipes leading to the brake-cylinder or cylinders, and 5 is the exhaust pipe. Leading from the train-pipe 4 is a pipe 6 which is provided with a valve 7. The pipe 6 leads to a cylinder 8, within which is a piston 9 having a piston rod 10 which projects through the lower end of said cylinder. A spring 11 is arranged within the cylinder below the piston with one end bearing against the piston and the other end bearing against the bottom of the cylinder, said spring acting to normally keep the piston 9 in its upper position, as shown in Fig. 2. The lower end of the piston-rod 10 normally engages one arm of a bell-crank lever 12 which is pivoted to a bracket 13 secured to the car-platform. To the other arm 14 of said bell-crank lever is connected a rod 15, the other end of which rod is connected to one arm 16 of a bell-crank lever which is shown as pivoted on the frame of the fender. The other arm 17 of this bell-crank lever is arranged to engage the upper end of the sliding latch-block 18 which serves to normally latch the fender 19 in its raised position, as shown in Fig. 1, said block 18 being provided with a notch 20, with which a projecting pin 31 se-

cured to the fender engages, and by means of which engagement the fender is held in its latched position.

The controlling valve is provided with the usual operating handle 22, and the valve 7 in the pipe 6 is arranged in proximity to said operating handle as shown in Figs. 1 and 2. The valve 7 may be of any suitable construction, but is preferably a spring-pressed valve with the spring operating to keep the valve normally seated, and is provided with a projecting valve-stem 23. The hub of the handle 22 is provided with a cam projection 24, and the projecting end of the valve stem 23 is so arranged as to normally stand in the path of said cam 24 and so that when the handle 22 is moved from the position shown in full lines to the position shown in dotted lines in Fig. 4 the cam 24 will operate to press the valve-stem 23 inward and thereby open the valve 7. It will be understood that the position of the operating handle 22 shown in dotted lines in Fig. 4 is the position which said handle occupies when the handle and the controlling valve have been moved to what is known as emergency position. The handle 22 is also provided with a second cam-projection 25 for a purpose hereafter to be described.

The operation of the parts above described is as follows: With the valve 7 closed the piston 9 and piston-rod 10 are in the position shown in Figs. 1 and 2 and in such position that the fender 19 may be latched in its raised position, as shown in Fig. 1. For a service application of the brakes the handle 22 is moved only a comparatively short distance to the right and not sufficiently far to cause any movement of the valve-stem 23 by the cam 24. Consequently such service application of the brakes will not operate to release the fender. When, however, the handle 22 is moved to the dotted line position in Fig. 4 the cam 24, by its engagement with the valve-stem 23, will operate to open the valve 7 and thereby admit air under pressure from the train-pipe 4 through the pipe 6 to the cylinder 8, where it will act upon the piston 9 and move the same downward. The downward movement thereby imparted to the piston-rod 10 will depress the arm 12 of the bell-crank lever, which movement of said lever will, through the connecting rod 15 and bell-crank lever 16, 17, serve to raise the latch 18 and so as to release the fender 19 and permit the forward end thereof to drop down into contact with the rails or with the roadbed between the rails. It will be understood that when the air-pressure is to be exhausted from the brake-cylinder and from the train-pipe 4, the handle 22 is to be moved from the position shown in dotted lines to a position at the left of the position shown in full lines in Fig. 4. Such movement of the handle will move the cam 24 out of engagement with the valve-stem 23 and thus cause the valve 7 to be closed by its spring. This closing of the valve 7 will prevent the exhausting of the air-pressure from the cylinder 8 so long as said valve 7 remains closed, and consequently it is necessary to again open the valve 7 for the purpose of exhausting said cylinder 9. For this purpose the cam-projection 25 is so located that after the handle 22 has been moved to its usual exhaust position a slight further movement of said handle beyond that position will bring said cam 25 into engagement with the valve-stem 23 and thereby again open the valve 7. This opening of the valve 7 will cause the cylinder 8 to be exhausted through the controlling-valve and through the exhaust pipe 5. When the cylinder 8 is thus exhausted the piston-rod 10 will be raised by the spring 11 and so that the fender may be then again latched in its raised position. It is desirable whenever the fender is thus dropped by the emergency application of the air-brakes to sound a blast upon the whistle with which the cars are usually provided. For this purpose the piston-rod is provided with a cam-projection 26 and the pipe 27 which leads from the reservoir to the whistle is provided with a valve 28, the valve-stem 29 of which is arranged in the path of said cam 26. With this construction whenever the piston-rod 10 is moved downward the cam 26 will force in the valve-stem 29 and thus permit the flow of air through the pipe 27 to the whistle. As shown in the drawings, the cam 26 is of such construction that in the continued downward movement of the piston-rod 10 said cam will pass by the valve-stem 29 and thus permit the valve 28 to be closed after a short blast has been given.

Referring now to the modified arrangement shown in Figs. 5 to 10 inclusive, the reservoir pipe 2, the controlling valve 3, the train-pipe 4 and the exhaust-pipe 5 are arranged in the same manner as in Fig. 2. The pipe 6, however, instead of leading from the train-pipe 4 leads from the controlling valve and the controlling valve is constructed somewhat differently from the valve heretofore commonly employed, being provided with a port or ports for controlling the admission of air and the exhaustion of air from the pipe 6 and cylinder 8. As shown in Fig. 6, the pipe 6 communicates with a lateral port 30 formed in the non-rotary member 31 of the controlling valve. The vertical port 32 also formed in the non-rotary member 31 communicates with the lateral port 30 as shown. The rotary member 33 of the controlling valve is provided with a port 34 adapted to be brought into alinement with the port 32. The rotary member 33 is also provided with another port 35 which is arranged so as to be brought into alinement with the port 32

when the rotary member 33 is moved to its full exhaust position. It will be understood that the port 32 in the non-rotary member and the ports 34 and 35 in the rotary member are ports additional to those commonly employed in the controlling valve, such additional ports being provided, in connection with the releasing of the fender as hereinafter described. It will be further understood that the other ports indicated in the diagrammatic views, Figs. 8, 9 and 10, are the usual ports of the controlling valve as heretofore employed, and it will be sufficient simply to designate these ports by numbers as follows: 36 is the inlet port and 37 the outlet port of the rotary member; 38 is the service port and 39 the emergency port of the non-rotary member, both of which communicate with the reservoir pipe 2; 40 is the port in the non-rotary member which communicates with the train-pipe 4 and 41 is the slow exhaust port and 42 the full exhaust port in the non-rotary member, both of which ports communicate with the exhaust pipe 5.

The operation of the arrangement last described is as follows: Fig. 8 represents the rotary member of the controlling valve in what is known as lap position with all the ports closed. Whenever the rotary member is moved from the position shown in Fig. 8 to the position shown in Fig. 9, which is the emergency position of the controlling valve, the port 34 in the rotary member will be brought into alinement with the port 32 in the non-rotary member, as shown in Figs. 6 and 9. With the parts in this position, therefore, the air under pressure which is admitted to the interior of the rotary member by the bringing of the port 36 into alinement with the port 39 will flow through the ports 34, 32, 30 into the pipe 6 and thence into the cylinder 8, where it will act upon the piston in said cylinder to move the same and its piston-rod downward, and so as to turn the bell-crank lever 12 and thereby unlatch and release the fender as in the construction shown in Figs. 1 and 2. When now the rotary member is moved from the position shown in Fig. 9 to the position shown in Fig. 10, which is the full exhaust position of said member, the port 35 will be brought into alinement with the port 32 in the non-rotary member and thereby communication will be established from the pipe 6 through the non-rotary and rotary members to the exhaust pipe 5 and so as to exhaust the cylinder 8 and thus permit the resetting of the fender.

It may be sometimes desirable, as when the car has been stopped upon an incline, to exhaust the cylinder 8 and to reset the fender without releasing the air-brakes, and in the arrangement shown in Fig. 5 means are provided for doing this. Such means consists of a suitable exhaust valve 43 located in the pipe 6 and provided with a projecting valve-stem 44. This valve 43 is provided with a port opening to the atmosphere, which port is normally closed by the valve which may be held to its seat by a spring. When it is desired to thus exhaust the cylinder 8 without releasing the brakes the controlling valve is moved to the lap position shown in Fig. 8, in which position all the ports are closed and which movement of the valve will therefore not operate to release the brakes. With the controlling valve thus moved to lap position the motorman or engineer may, by pressing upon the valve-stem 44, move the valve 43 away from its seat and so as to open the port to the atmosphere and thereby exhaust the cylinder 8.

With both of the arrangements above described, as will be seen, whenever there is an emergency application of the brakes, the fender will be released and dropped without any operation or manipulation of the handle 22 of the controlling valve in operating said valve for the emergency application of the brakes.

In the arrangement shown in Figs. 1 to 5 inclusive a valve in addition to the controlling valve is employed, the operation of said additional valve being controlled by the movement of the handle 22 of the controlling valve. In the arrangement shown in Figs. 5 to 10 inclusive no additional valve is required but the release of the fender is effected by the operation of the controlling valve itself.

While in both of the arrangements above described the flow of the compressed air to actuate the fender releasing mechanism is controlled either directly or indirectly by the movement of a controlling valve adapted for both service and emergency applications, it will be understood that so far as the present invention is concerned two separate controlling valves may, if desired, be employed, one adapted for service application and the other adapted for emergency application of the brakes, and with the fender-releasing mechanism controlled from the second or emergency valve, it being essential only that the fender-releasing mechanism shall be actuated and the fender released whenever there is an emergency application of the air-brakes. It is preferred, however, to employ a single controlling valve which is adapted for both service and emergency applications, as thereby there is only one valve to be manipulated and the liability of confusion is avoided.

It will be understood that any other suitable form of air-brake controlling valve may be employed in place of the one herein shown and described. It will be further understood that instead of providing the controlling valve handle with the cam-pro-

jection 24, the valve 7 may, if desired, be so located that the valve-stem 23 will be in the path of the handle 22 itself, and so as to be operated by the engagement of said handle therewith in its movement to emergency position.

While it is preferred to employ the fluid pressure of the air-brake system for operating the piston 9, such fluid pressure may, in the arrangement shown in Figs. 1 to 5 inclusive, be taken from a separate source, if desired, as for example from a separate reservoir provided for the purpose.

What I claim as my invention and desire to secure by Letters Patent is:

1. The combination of an air-brake controlling valve, a fender, fluid pressure mechanism for operating said fender, and means actuated by the handle of said controlling valve for admitting fluid pressure to actuate said fender operating mechanism.

2. The combination of an air-brake controlling valve, a fender, fluid pressure mechanism for operating said fender, and a supplemental valve adapted to be operated by the handle of said controlling valve for admitting fluid pressure to actuate said fender operating mechanism.

3. The combination of an air-brake controlling valve, a fender, fluid pressure mechanism for operating said fender, and a supplemental valve adapted to be operated by the handle of said controlling valve for admitting fluid pressure to actuate said fender operating mechanism, said handle being provided with a suitable projection to operate said supplemental valve.

4. The combination of an air-brake controlling valve, a fender, fluid pressure mechanism for operating said fender, and a supplemental valve adapted to be operated by the handle of said controlling valve for admitting fluid pressure to actuate said fender operating mechanism, said handle being provided with a suitable projection arranged to operate said supplemental valve when said handle is moved to its emergency position.

5. The combination of an air-brake controlling valve, a fender, a cylinder and piston for operating said fender, and a supplemental valve adapted to be operated by the handle of said controlling valve for admitting fluid pressure to said cylinder to actuate said piston.

6. The combination of an air-brake controlling valve, a fender, fluid pressure mechanism for operating said fender, and a supplemental valve adapted to be operated by the handle of said controlling valve, said handle being provided with two projections, one arranged to operate said supplemental valve to admit fluid pressure to actuate said fender operating mechanism, and the other arranged to operate said supplemental valve to exhaust the fluid pressure thus admitted.

7. The combination of an air-brake controlling valve, a fender, a cylinder and piston for operating said fender, and a supplemental valve adapted to be operated by the handle of said controlling valve, said handle being provided with two projections, one arranged to operate said supplemental valve to admit fluid pressure to said cylinder, and the other arranged to operate said supplemental valve to exhaust the fluid pressure from said cylinder.

8. The combination of an air-brake controlling valve, a fender, a cylinder and piston for operating said fender, means controlled by said controlling valve for admitting fluid pressure to said cylinder to actuate said piston, a whistle operating pipe, and a valve therein adapted to be operated by said piston.

WILLIAM D. WRIGHT.

Witnesses:
W. H. THURSTON,
J. H. THURSTON.

Copies of this patent may be obtained for five cents each, by addressing the "Commissioner of Patents, Washington, D. C."