US00D943760S

(12) United States Design Patent

Luther et al.

(10) Patent No.: US D943,760 S
(45) Date of Patent: ** Feb. 15, 2022

(54) **ELECTROPORATION PROCESSING ASSEMBLY**

(71) Applicant: **MaxCyte, Inc.**, Gaithersburg, MD (US)

(72) Inventors: **James William Luther**, Mllan (IT); **Bertold Engler**, Altensteig (DE); **Andrea Besana**, Seveso (IT); **Thomas Alan Peach**, Milan (IT); **Frank Modica**, Silver Spring, MD (US); **Nicholas Chopas**, Germantown, MD (US)

(73) Assignee: **MaxCyte, Inc.**, Gaithersburg, MD (US)

(**) Term: **15 Years**

(21) Appl. No.: **29/734,314**

(22) Filed: **May 11, 2020**

(51) **LOC (13) Cl.** **24-01**

(52) **U.S. Cl.**
USPC **D24/216**

(58) **Field of Classification Search**
USPC D24/107, 186, 209, 210, 216, 217, 219, D24/224–227, 231, 232, 233, 234; D10/81
CPC B01L 2200/16; B01L 2200/18; B01L 2300/0809; B01L 3/502; B01L 3/523
See application file for complete search history.

(56) **References Cited**

U.S. PATENT DOCUMENTS

D445,509	S *	7/2001	Berndt	D24/231
6,773,669	B1 *	8/2004	Holaday	C12M 35/02 422/44
D630,765	S *	1/2011	Winkenbach	D24/224
D711,549	S *	8/2014	Trump	D24/224
D717,438	S *	11/2014	Lin	D24/216
D718,473	S *	11/2014	Benarieh	D24/232
D923,200	S *	6/2021	Luther	D24/233
D931,493	S *	9/2021	Darbyshire	D24/224
2004/0197883	A1 *	10/2004	Dzekunov	C12M 35/02 435/173.6
2006/0245970	A1 *	11/2006	Lee	B01L 3/523 422/400
2020/0290037	A1 *	9/2020	Salomon	G01N 35/0098
2021/0106987	A1 *	4/2021	Lind	G01N 35/00
2021/0123009	A1 *	4/2021	Yeo	C12M 27/02

OTHER PUBLICATIONS

Maxcyte. Next Gen PAs work with: ExPERT STx and ATx, STX and ATX Instruments. Unknown publishing date. Retrieved on Sep. 23, 2021 from website: https://maxcyte.com/r-50x3/.*

* cited by examiner

Primary Examiner — Anhdao Doan
(74) *Attorney, Agent, or Firm* — Finnegan, Henderson, Farabow, Garrett & Dunner, LLP

(57) **CLAIM**

The ornamental design for an electroporation processing assembly, as shown and described.

DESCRIPTION

FIG. **1** is a front, top, right perspective view of an electroporation processing assembly, showing the new design;
FIG. **2** is a rear, bottom, left perspective thereof;
FIG. **3** is a left view thereof;
FIG. **4** is a rear view thereof;
FIG. **5** is a front view thereof;
FIG. **6** is a top view thereof; and,
FIG. **7** is a bottom view thereof.
The broken lines of even length depict portions of the electroporation device that form no part of the claimed design.

1 Claim, 7 Drawing Sheets

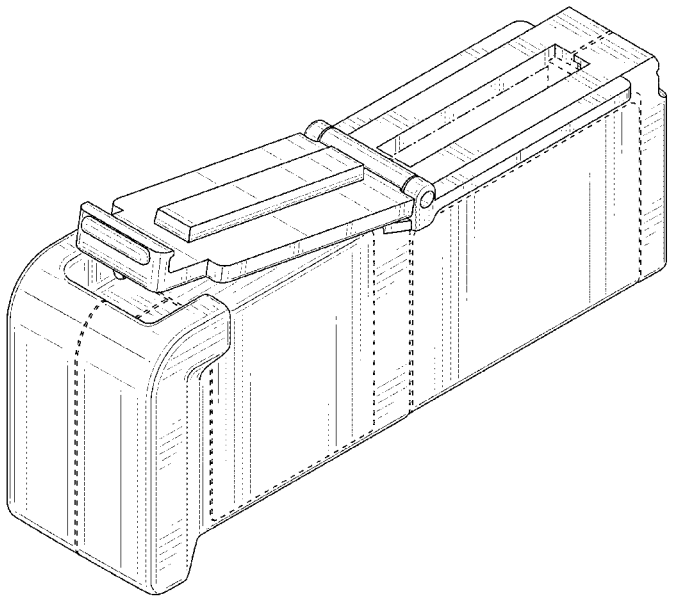

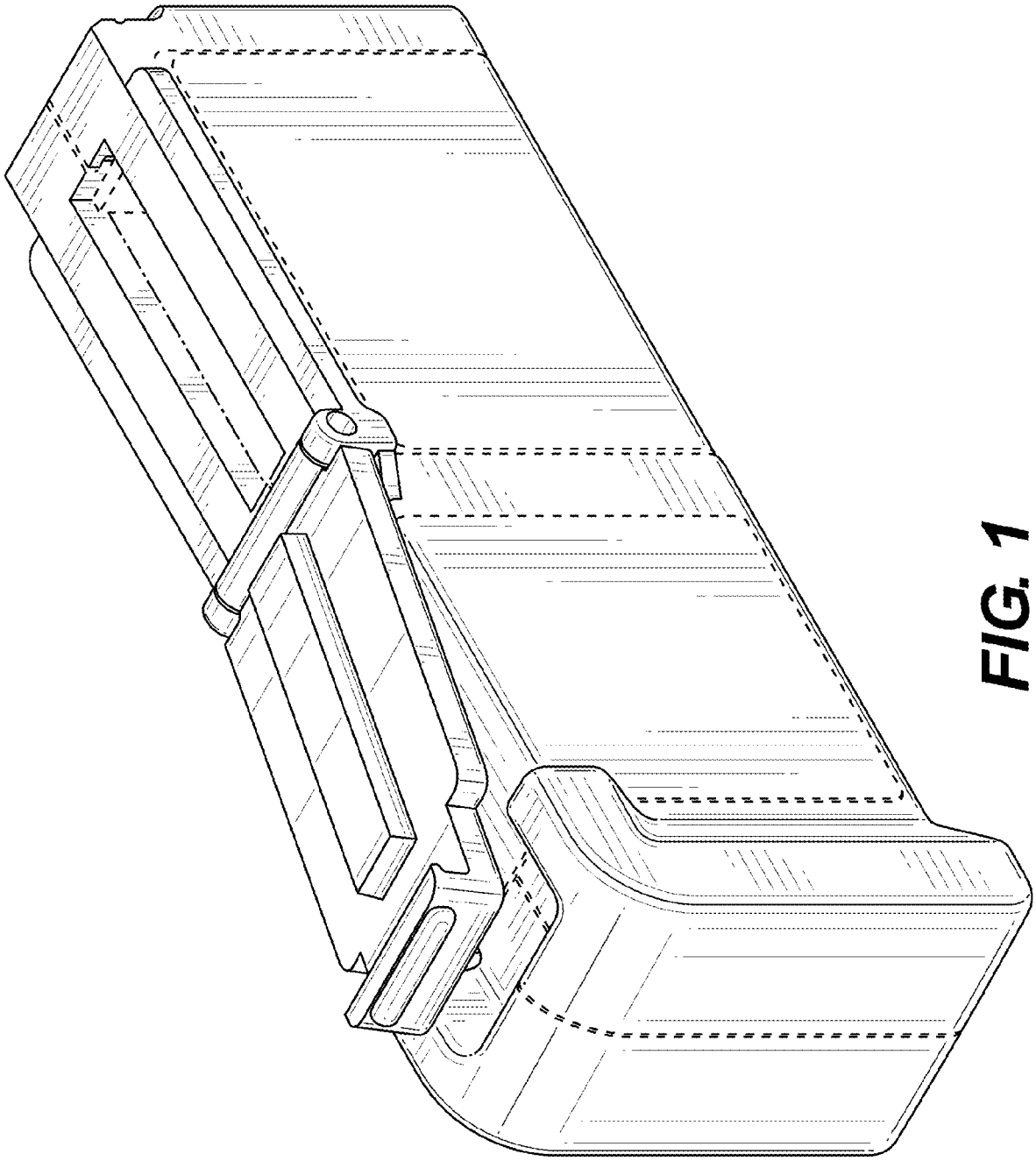

FIG. 1

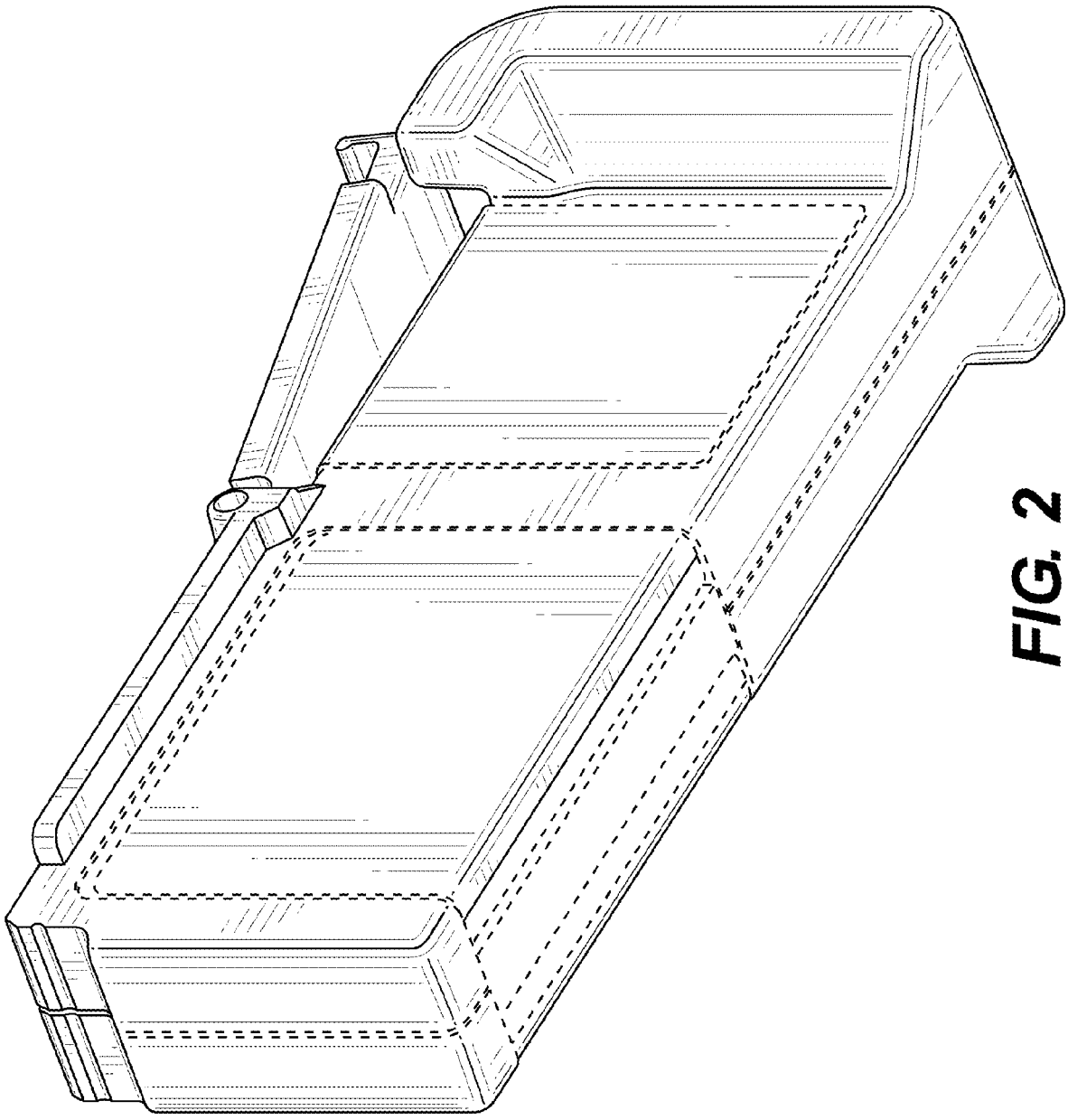

FIG. 2

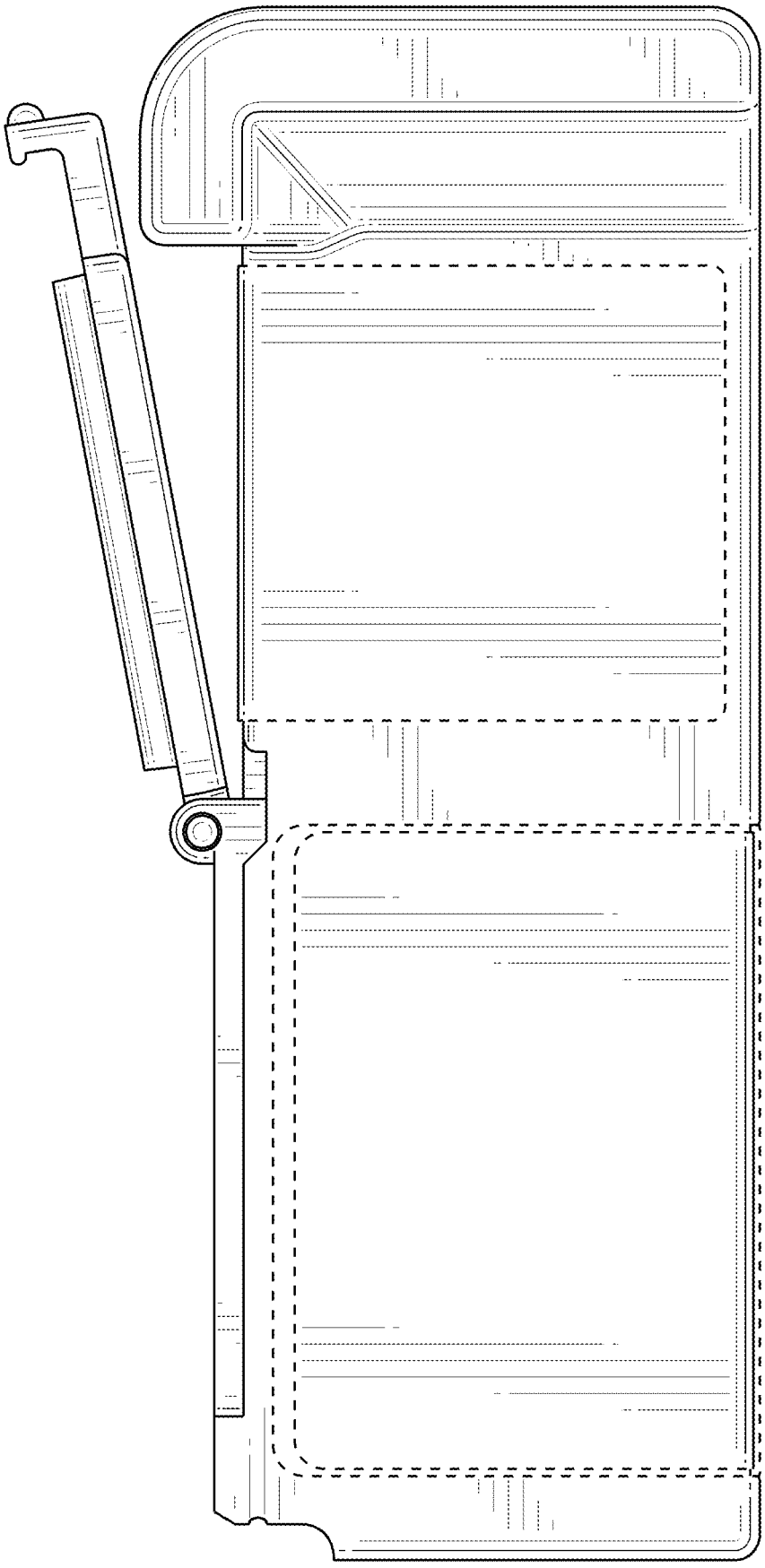

FIG. 3

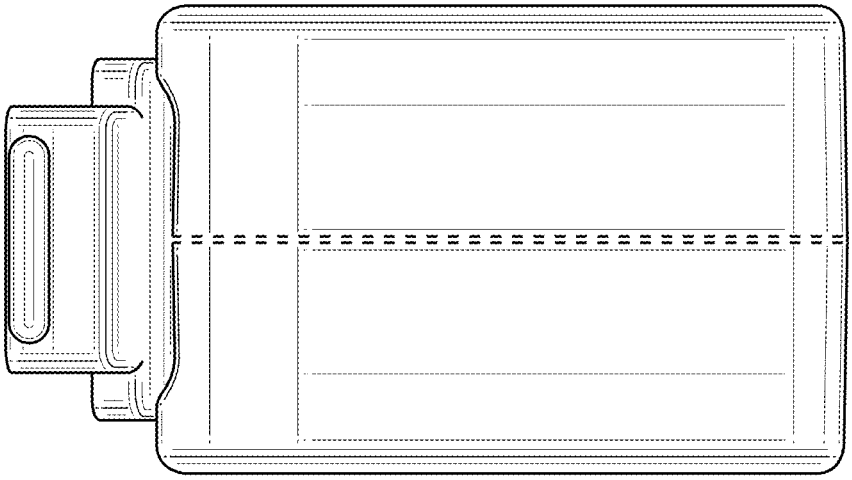

FIG. 4

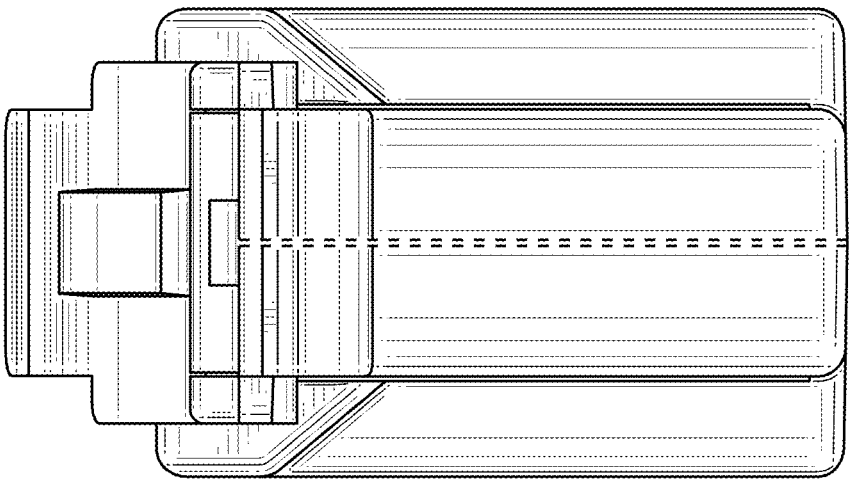

FIG. 5

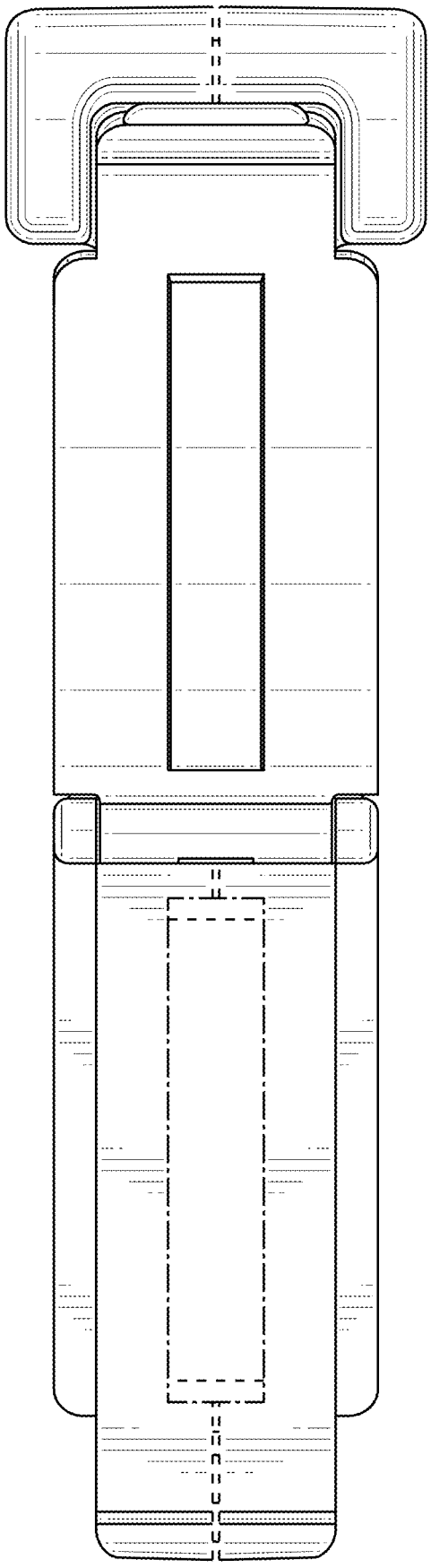

FIG. 6

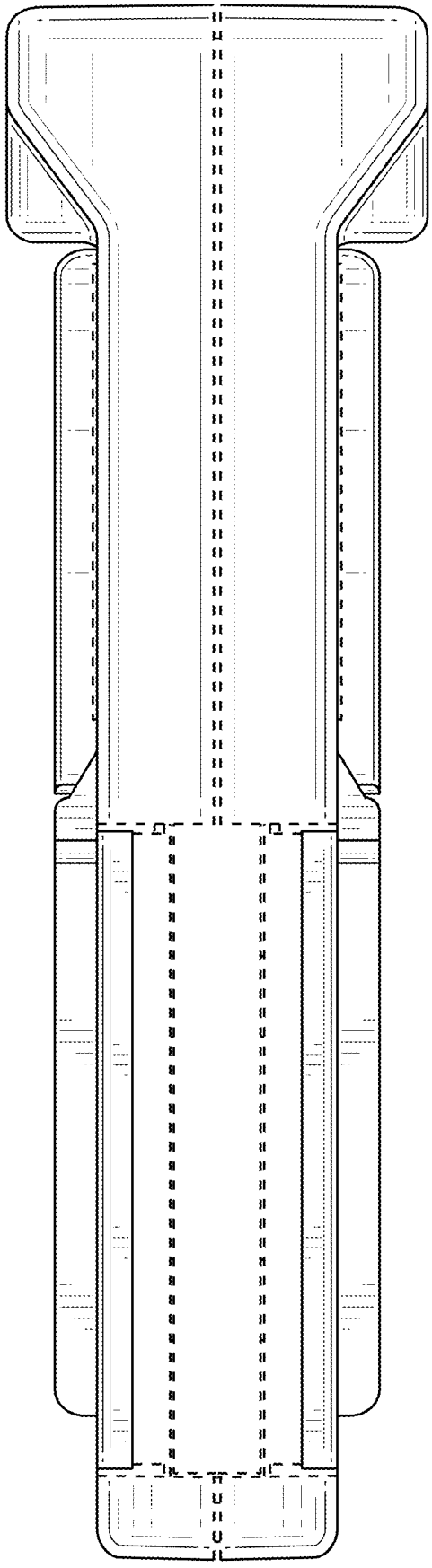

FIG. 7