US 20060237384A1

(19) United States

(12) Patent Application Publication

(10) Pub. No.: US 2006/0237384 A1

(43) Pub. Date: Oct. 26, 2006

Neumann et al.

(54) TRACK UNIT WITH REMOVABLE PARTITIONS

(76) Inventors: **Eric Neumann**, White Plains, NY (US); **Daniel C. Riley**, Hackensack, NJ (US)

Correspondence Address:
AMSTER, ROTHSTEIN & EBENSTEIN LLP
90 PARK AVENUE
NEW YORK, NY 10016 (US)

(21) Appl. No.: 11/110,429

(22) Filed: Apr. 20, 2005

Publication Classification

(51) Int. Cl.
A47F 5/00 (2006.01)

(52) U.S. Cl. 211/184

(57) ABSTRACT

A kit for a display and dispenser track assembly for dispensing products of single width, packs of double width, and simultaneously alternately products and packs. The display track defines a plurality of fixed partitions, each adjacent pair thereof establishing a pack path of double width, and an upstanding pack stop at the front of each pack path. The kit provides at least one insertable and removable partition receivable on the display track for converting a single pack path of double width into two adjacent product paths of single width, with a pair of oppositely directed hoop stops of single width at the front of each such product path.

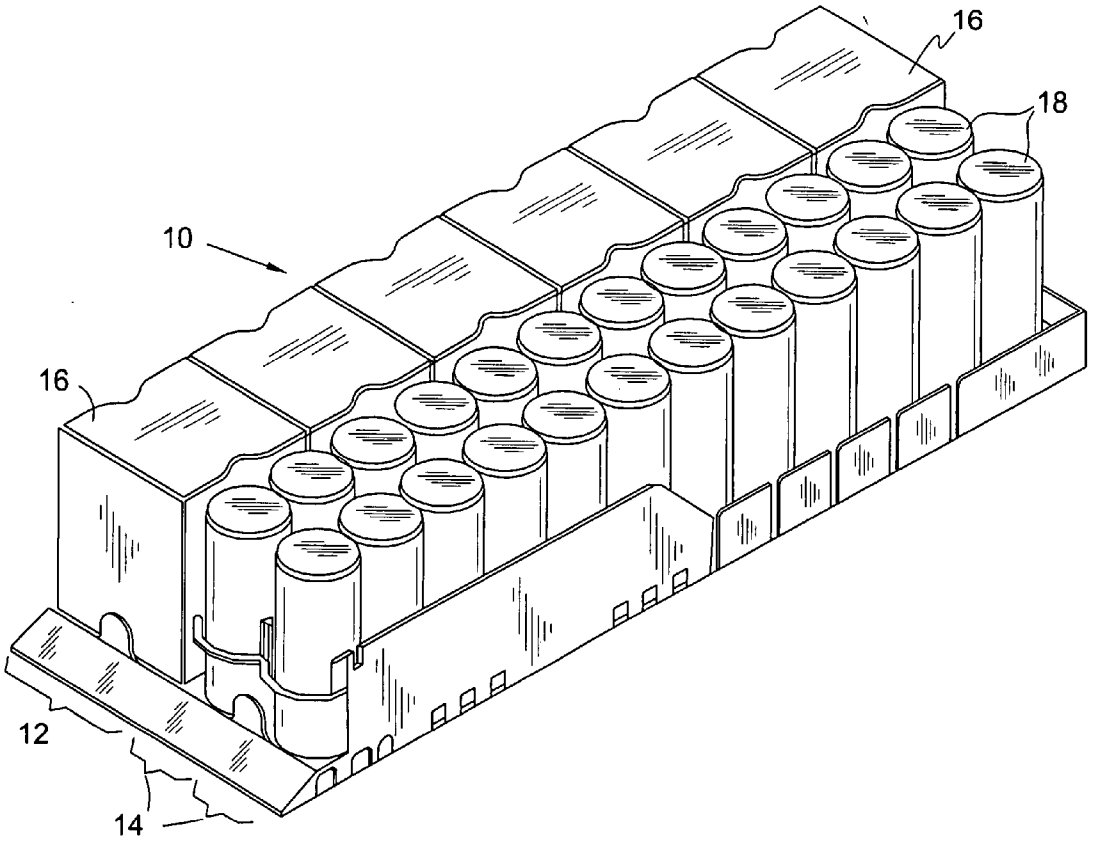

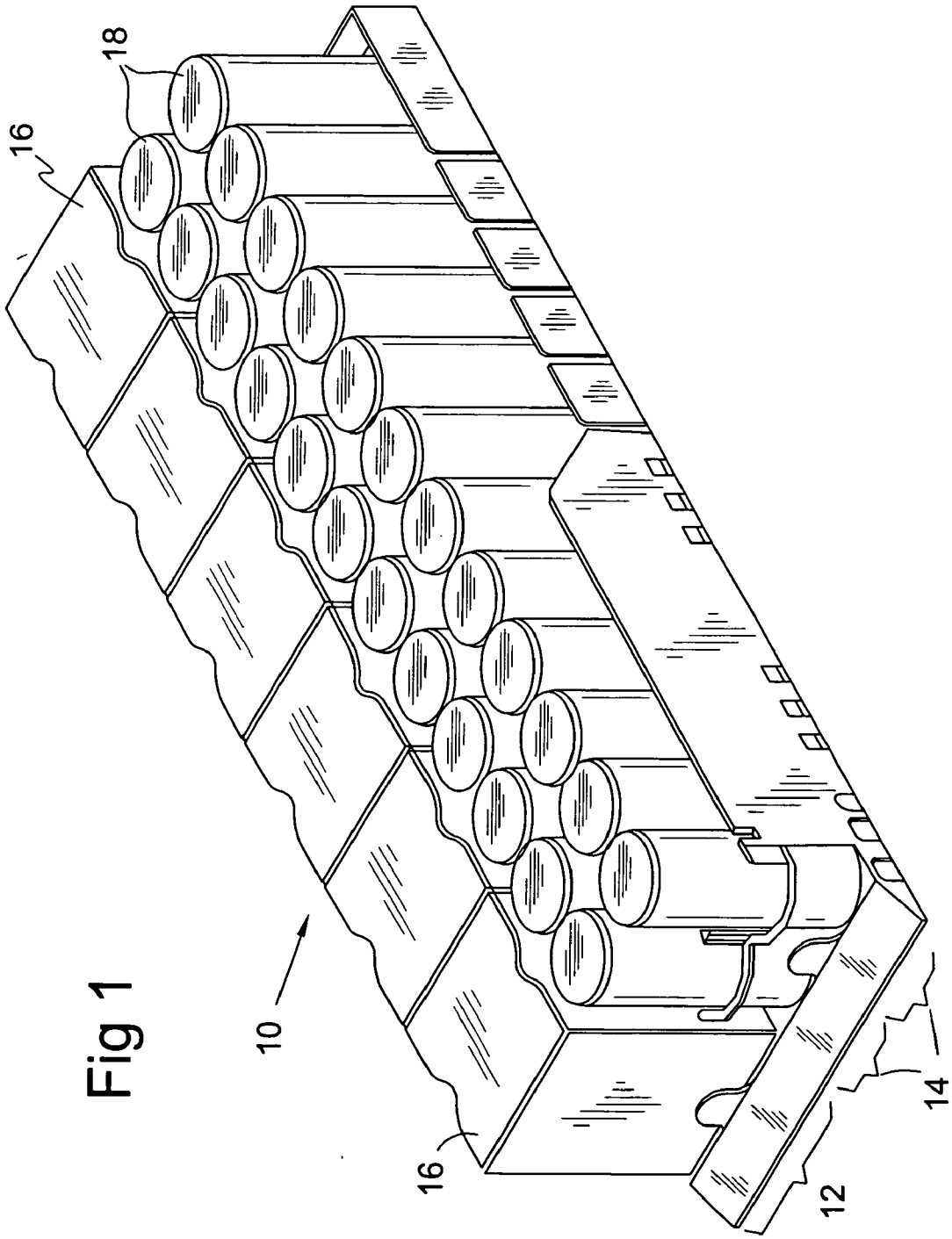

Fig 1

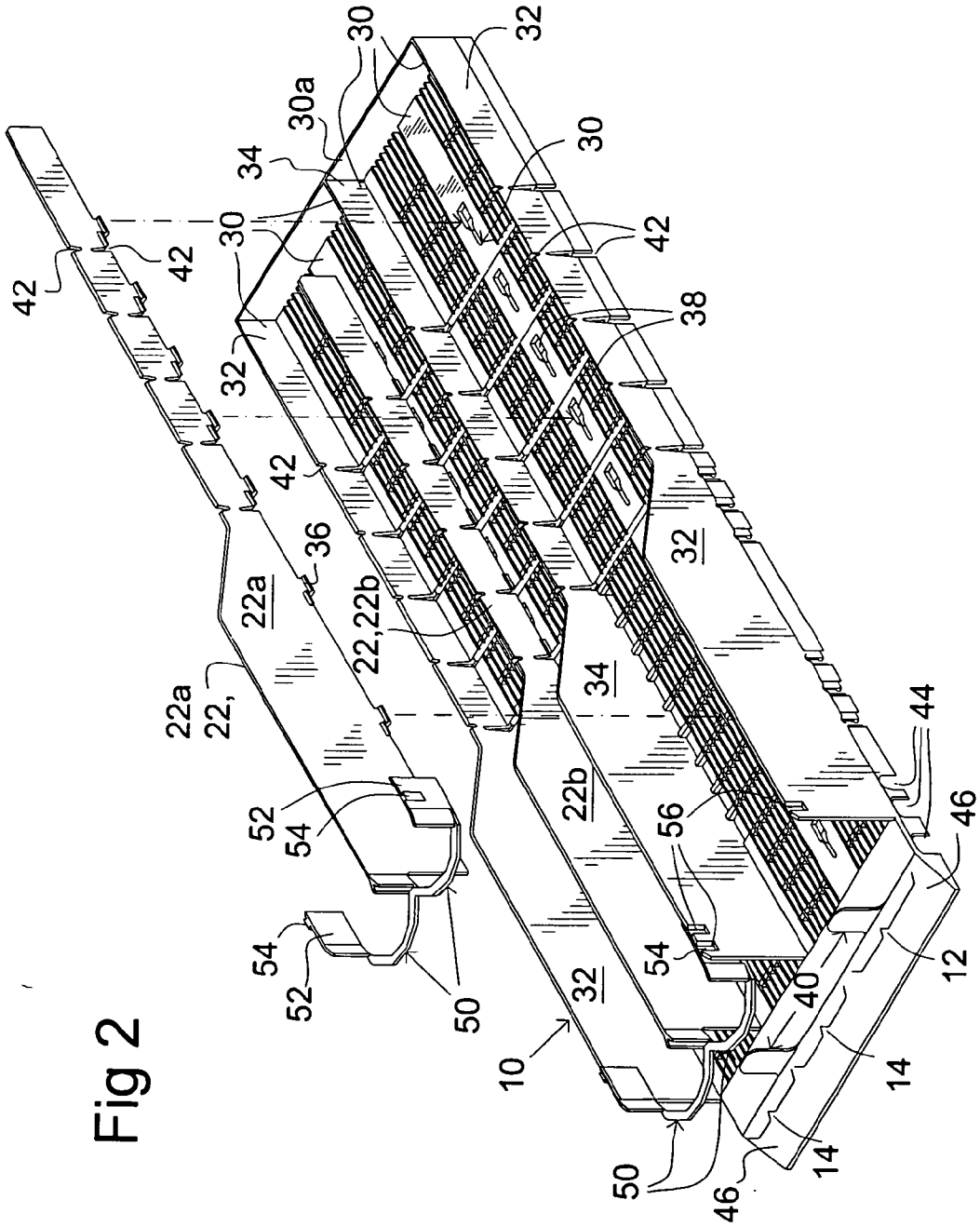
42
42
30
30a
34
30
32
30
42
38
32
42
36
22a
22,
22,22b
32
34
22b
52
54
54
52
50
32
10
56
54
40
50
46
14
14
12
46
44

Fig 2

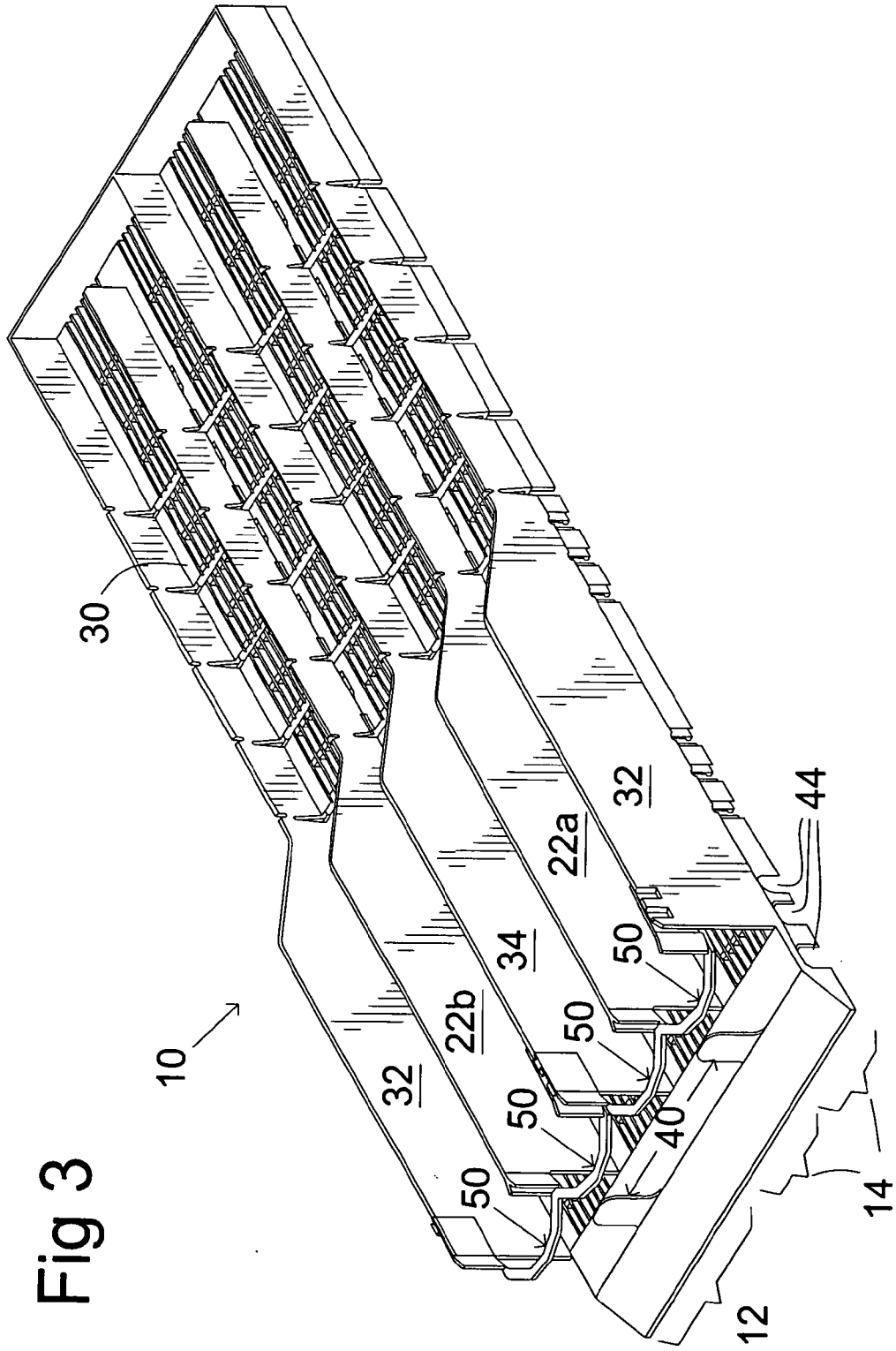

Fig 3

TRACK UNIT WITH REMOVABLE PARTITIONS

BACKGROUND OF THE INVENTION

[0001] The present invention relates to a display track unit for display and dispensing one-at-a-time the lead article in a line of articles on a display track, and more particularly to such a display unit operable with insertable and removable partitions for varying the widths of the display tracks therein.

[0002] Display shelves are commonly found in stores, supermarkets and the like for the display of articles available for sale. The display shelf may be flat, in which case there may be a spring-loaded pusher unit to push the displayed articles forward as each foremost (lead) article is purchased and removed, or inclined, in which case, as each lead article is removed the remainder of the articles move forwardly under the influence of gravity (such inclined shelves typically being known as "gravity-feed shelves"). Depending upon the type of articles to be displayed, the display shelf may be disposed on a counter or table top (for example, where the articles for display are batteries, film, or other dry, canned, boxed or bagged food and consumer articles commonly sold at room temperature) or on a supporting tray in a refrigeration unit (for example, where the articles are bottles or cans of beer, soda, milk or other articles commonly sold chilled). The display shelf may consist of a single track or channel but more commonly consists of a plurality of such tracks disposed side-by-side in either a fixed or releasable relationship.

[0003] Rather than the manufacturer of the tracks having to manufacture and store a variety of tracks of different widths—each track being suited only for articles of a given width—it has become more common to provide a display track which has as wide a floor as possible (considering the width of a typical store shelf) with a fixed longitudinally-extending side panel on each extreme lateral end thereof. The track assembly is sold with a plurality of insertable and removable partitions which are adapted to be reasonably received by the track in an upright longitudinally-extending orientation intermediate and parallel to the side panels. Track manufacturers have developed a wide variety of different fastening mechanisms which enable the partitions to be so releasably fastened upon the track. The insertable and removable partitions form with one another (or with the fixed side panels) track paths or lanes which have a width selectable by the retailer to accommodate the particular articles to be displayed and dispensed.

[0004] Increasingly, articles are being sold not just as single units possessed of a single unit width, but in "packs" (packages) which themselves contain two articles or two lines of articles, side by side, so that the pack is generally of double unit width. Clearly, such packs may contain four, six, eight or even more articles disposed in two parallel rows. Providing multiple articles in a single pack encourages the consumer to purchase the pack either in the belief that a volume discount in unit price is associated therewith or simply because it is easier to handle such a preformed pack than a number of individual articles. Articles commonly sold in packs range from batteries to paper towels and toilet paper, with the most prominent articles simply being beverages such as soda cans, soda bottles or the like sold as "two-packs,""four-packs,""six-packs," etc., depending on how deep the two lane pack.

[0005] As used herein and in the claims, the term "product" refers to an article of single or unit width, while the term "pack" refers to an article of double unit width, that is, substantially twice the single or unit width.

[0006] The products and packs in the lanes or paths defined by the various partitions tend to topple off the front of their display tracks or, in display cabinets with front doors, to slide too far forward and lie against the front door, ready to fall as soon as the front door is opened. Thus, the use of insertable and removable partitions introduces a new problem—namely, the provision of a stop means to prevent both products and packs from falling off the forward edge of the display track.

[0007] One object of the present invention is to provide a kit for a display and dispenser track assembly for dispensing products of single unit width, packs of double unit width, or simultaneously alternately such products and packs. Such a track assembly may dispense only the products of single width, only the packs of double width, or simultaneously alternately products from a single width lane and packs from a double width lane.

[0008] Another object is to provide such an assembly wherein there are different types of stop means for the products and for the packs, the stop means for the products not interfering with the stop means for the packs, and vice versa.

[0009] A further object is to provide such assembly wherein the track contains stop means for the packs, and the stop means for the products are provided with the insertable and removable partitions used to convert pack lanes into product lanes.

[0010] It is also an object of the present invention to provide a kit for such an assembly which is simple and inexpensive to manufacture, assemble and use.

SUMMARY OF THE INVENTION

[0011] It has now been found that the above and related objects of the present invention are obtained in a kit for a display and dispenser track assembly for dispensing products of single width, packs of double width, or simultaneously alternately products and packs. The kit comprises a display track defining a plurality of fixed partitions, each adjacent pair of the fixed partitions establishing therebetween a single pack path of double width and at least one insertable and removable partition receivable on the display track, each such received insertable and removable partition converting a single pack path into two adjacent product paths of single width. The fixed partitions and the received insertable and removable partitions on the display track establish between adjacent partitions paths of optionally variable widths selected from the group consisting of product paths of single width, pack paths of double width and combinations thereof. Each insertable and removable partition including a pair of oppositely directed hoop stops at the front end thereof for barring the lead product in each of two adjacent product paths on opposite sides of the received insertable and removable partition from falling off the front of the display track. The display track including an upstanding stop at the front of each pack path for barring the lead pack thereon from falling off the front of the display track.

[0012] In a preferred embodiment, when a received one of the insertable and removable partitions converts a single

pack path into two adjacent product paths, the upstanding stop at the front of the single pack path does not bar easy removal of the lead products from the two adjacent product paths.

BRIEF DESCRIPTION OF THE DRAWING

[0013] The above objects, features and advantages of the present invention will be more fully understood by reference to the following detailed description of the presently preferred, albeit illustrative, embodiments of the present invention when taken in conjunction with the accompanying drawing wherein:

[0014] **FIG. 1** is an isometric view of the track assembly of the present invention with a single pack path and two product paths;

[0015] **FIG. 2** is an isometric view of the track assembly illustrating an insertable and removable partition in the process of being received by a pack path and converting the pack path into two product paths; and

[0016] **FIG. 3** is an isometric view of the pack assembly of **FIG. 2** after the insertable and removable partition has been received.

DETAILED DESCRIPTION OF THE PREFERRED EMBODIMENTS

[0017] Referring now to the drawing, and in particular to **FIG. 1** thereof, therein illustrated is a track assembly according to the present invention, generally designated by the reference numeral **10**. As illustrated in **FIG. 1**, the track assembly **10** defines a pack lane generally designated **12** and two adjacent product lanes, each generally designated **14**. The pack lane **12** supports a line of double width packs **16** (illustrated as four-packs), and each product lane **14** supports a line of single width products **18** (illustrated as cylindrical cans). Thus the particular track assembly illustrated in **FIG. 1** is designed for dispensing simultaneously alternate products and packs—that is, a pack **16** from line **12** and a product **18** from each of the two product lines **14**.

[0018] While **FIG. 1** illustrates the track assembly **10** configured for simultaneously alternately dispensing products **18** and packs **16**, the kit of the present invention, generally designated **20**, may alternatively be a track assembly **10** configured to provide exclusively products paths **14** (e.g., 4 product paths) or exclusively pack paths **12** (e.g., 2 pack paths).

[0019] Depending upon the manufacturer's estimate of the probable configuration of the track assembly **10** to be used by the retailers and the assembly costs, and the packaging and shipping costs, the kit **20** may be sold to retailers pre-configured with pack and product lines **12**, **14** (as illustrated in **FIG. 3**) or simply provided with the insertable and removable partitions **22** in place so that there are only pack lanes **12** initially defined. Indeed, the provision of the insertable and removable partitions **22** may be an optional feature, provided only upon request of the retailer and possibly at an additional charge to the retailer.

[0020] Referring now to **FIG. 2** in particular, the display track assembly **10** comprises a display track generally designated **30**. The display track **30** itself defines a pair of fixed partitions **32** (which function as the extreme lateral sidewalls for the track assembly **10**) and one or more fixed partitions **34** (only one being shown) intermediate the sidewall partitions **32** (which function to divide the track assembly **10** into pack lanes **12**). It will be appreciated that, by themselves, the fixed partitions **32**, **34** define two adjacent pack paths **12** (the number of pack paths defined being one less than the total number of fixed partitions **32**, **34**).

[0021] As illustrated in **FIG. 2**, there are two insertable and removable partitions **22***a*, **22***b* receivable on the display track **30**, one such partition **22***a* being illustrated as already received on the track **30** and converting one of the two single pack paths **12** into two adjacent product paths **14**, and another such partition **22***b* being illustrated in the process of insertion into the track **30** to convert the remaining pack path **12** into another two adjacent product paths **14**.

[0022] Thus, the fixed partitions **32**, **34** and the received insertable and removable partitions **22** on the display track **30** establish between adjacent partitions (either two fixed partitions **32**, **34** or between one fixed partition **32**, **34** and one received insertable and removable partition **22**) paths of optionally variable widths. The variable widths may be selected from the group consisting of product paths of single widths, pack paths of double widths and combinations thereof.

[0023] While the fixed partitions **32**, **34** are of integral, unitary, one-piece construction with, and thus non-releaseable from, the track **30**, as manufactured, the insertable and removable partitions **22** are only releasably secured to the track **30** by the engagement of a plurality of longitudinally spaced fan-shaped keys **36** on the bottom edge of the partition **22** and corresponding keyways **38** longitudinally spaced along the central line of each pack path **12**. The keys **36** and keyways **38** fit together to form a tight interlocking joint, with the key **36** being first placed in the wider portion of the keyway **38** and then moved longitudinally into the narrower portion of the keyway **38**. It will be appreciated that the fixed partitions forming the sidewalls **32** of the track **30**, and preferably the other fixed partitions **34** as well, extend slightly below the floor of the track **30** on which the products **18** and packs **16** travel so that there is room for the keys **36** to pass through the keyways **38**.

[0024] It will be appreciated by those skilled in the art that while a key and keyway joint is illustrated as releaseably securing the insertable and removable partitions **22** upright on the track **30**, a relative wide range of fastening mechanisms, well known to those skilled in the display track art, may be employed for releasably securing the partitions **22** on the track **30**. Where the key and keyway joint is employed for the insertable and removable partitions **22**, and the track **10** includes a back wall **30***a*, the length of the insertable and removable partitions **22** is somewhat shorter than that of the fixed partitions **32**, **34** so that there is room for a rearward movement of the insertable and removable partition **22** relative to track **30** in order to allow for disengagement of the key and keyway joint.

[0025] For each pack path **12** defined by the fixed partitions **32**, **34** (or potentially formed therebetween if a received insertable and removable partition **22** were removed from the display track **30**), an upstanding stop, generally designated **40**, is disposed at the front of the pack path **12**. Preferably the upstanding stop **40** extends normal to a central longitudinal axis of the pack path **12** and extends

widthwise for only a relatively short portion of the full pack path width. The upstanding stops **40** are of unitary, integral and one piece construction with the track **30** and preferably made in a single manufacturing operation therewith, such as a plastic molding operation. Preferably the upstanding stops **40** are disposed adjacent a front ledge **46** of the track assembly **10**. An upstanding stop **40** is generally disposed normal to and extends across the central axis of each pack path **14**. The upstanding stops **40** are disposed forwardly of any received insertable and removable partitions **22**. The precise dimensions of the upstanding stops **40** are selected to insure that they are able to stop a pack **16** without allowing it to tip over forwardly (over the top of the upstanding stop **40**) or to skew relative to the pack path **14**, yet the upstanding stops **40** are only as large as necessary in order to maximize viewability of the front face of the lead packs **16** by the potential consumer.

[**0026**] As is conventional in the art, the track **30** (including the fixed partitions **32**, **34**) and the insertable and removable partitions **22** are optionally provided with cutaways **42** to enable rear portions thereof to be broken away, thereby to reduce the depth or length of the track assembly **10** so that it can be accommodated on retailer shelves of lesser depth or length.

[**0027**] Other conventional features of the track assembly optionally include bottom cutouts **44** which enable the front of the assembly to act as a "candy blocker" (so that on a cabinet shelf the assembly may be positioned forwardly off the shelf sufficiently to preclude items being disposed on the back of the front door of the cabinet) Another conventional feature is an optional forwardly and downwardly extending front ledge **46** for the track assembly **10** for carrying labels and the like for product and pack pricing information.

[**0028**] Turning now to the novel aspects of the present invention, as best seen in partition **22***a* of **FIG. 2**, each insertable and removable partition **22** includes a pair of oppositely directed arcuate hoop stops, generally designated **50** adjacent the front end thereof. Each hoop stop **50** is generally semi-circular and extends convexly outwardly from the front of the upper half of the partition **22** in a relatively smooth arc (preferably having a radius similar to or greater than the radius of the product **12**). Each hoop stop **50** terminates at its free end **52** in a reinforced dovetail tenon **54** adapted to engage a dovetail mortise **56** on an adjacent fixed partition **32**, **34**, thereby to strengthen the hoop stop **50**. Thus, a lead product **18** of single width traveling down a product lane **14** intermediate a fixed partition **32**, **34** and a received partition **22** is restrained (barred) from falling off the front edge of the track assembly **30** by a hoop stop **50** before it ever contacts the upstanding stop **40**.

[**0029**] Each of the fixed partitions **32** at the extreme lateral sides of the track assembly **10** is provided with a single dovetail mortise **56** to receive the single dovetail tenon **54** of a single adjacent insertable and removable partition **22**. However the intermediate fixed partitions **34** must be able to receive a dovetail tenon **54** from an adjacent insertable and removable partition **22** on each side thereof. Accordingly, each intermediate fixed partition **34** includes not just one, but two dovetail mortises **56** preferably, as illustrated in **FIG. 2**, one directly behind the other along the longitudinal axis of the fixed partition **34**. As illustrated specifically in connection with the insertable and removable partition **22***a* illustrated in **FIG. 2**, the placement of the dovetail tenons **54** on the hoop stop free ends **52** takes into account the fact that the right side tenon **54** will find itself associated with a mortise **56** disposed rearwardly relative to the mortise **56** which receives the left side tenon **54**.

[**0030**] As will be apparent to those skilled in the art, the same releasable locking effect can be achieved in a variety of other ways. For example, instead of two dovetail mortises **56** on an intermediate fixed partition **34**, there may be a single dovetail mortise **56** of sufficient height to receive therein two dovetail tenons **54**, one above the other, with one tenon **54** coming from each side of the fixed partition **34**. However, this may result in vertical skewing of one or both of the hoop stops **50** with certain resulting aesthetic and mechanical disadvantages.

[**0031**] It will be appreciated by those skilled in the art that the releasable connection of the free end **52** of each hoop stop **50** with an adjacent fixed partition **32**, **34** assists in fixing the hoop stop **50** in position and enables the height of the hoop stop **50** to be reduced as much as possible, thereby to maximize visibility of the lead product **18** in each product lane **14** to the consumer while still preventing the lead product **18** from falling off the front of the track **30**. To the same end, the hoop stops **50**—either alone or with the remainder of the insertable and removable partitions **22**—may be made of a clear plastic which does not interfere with viewing of the front label of the lead product in each product lane **14**. The hoop stops **50** are disposed rearwardly of the upstanding stops **40** so that the upstanding stops **40** neither contact nor block viewing of the front label of the lead products **18** in the product lanes **14**, or only minimally block the view of the same.

[**0032**] As the hoop stops **50** are of integral, unitary, one-piece construction with the insertable and removable partitions **22**, made in a single manufacturing process therewith, the hoop stops **50** are present on the track assembly **10** only when a pack path **12** has been converted into two adjacent product paths **14** by a received partition **22**. Thus, the hoop stops **50** are structurally separate pieces from the track **30** itself and play no role whatsoever in the stopping of the packs **16** traveling down the pack paths **12**.

[**0033**] Thus, the hoop stops **50** act only on the products **18** traveling down the product lanes **14** and do not interfere with the action of the upstanding stops **40** on the packs **16** traveling down the pack lanes **12**, and the upstanding stops **40** act only on the packs **16** traveling down the pack lanes **12** and do not interfere with the action of the hoop stops **50** on the products **18** traveling down the product lanes **14**.

[**0034**] To summarize, the present invention provides a kit for a gravity display and dispenser track assembly for dispensing products of single unit width, packs of double unit width, or simultaneously alternately such products and packs. Such a track assembly may dispense only the products of single width, only the packs of double width, or simultaneously alternately products from single width lanes and packs from double width lanes. Different types of stop means are provided for the products and for the packs, the stop means for the products not interfering with the stop means for the packs, and vice-versa. The track itself contains stop means for the packs, and the stop means for the products are provided with the insertable and removable partition used to convert a pack lane into two adjacent

product lanes. The kit for the assembly is simple and inexpensive to manufacture, assemble and use.

[0035] Now that the preferred embodiments of the present invention have been shown and described in detail, various modifications and improvements thereon will become readily apparent to those skilled in the art. Accordingly, the spirit and scope of the present invention is to be construed broadly and limited only by the appended claims, and not by the foregoing specification

We claim:

1. A kit for forming a display and dispenser track assembly for dispensing products of single width, packs of double width, or simultaneously alternately products and packs, comprising:

(A) a display track defining a plurality of fixed partitions, each adjacent pair of said fixed partitions establishing there between a single pack path of double width;

(B) at least one insertable and removable partition receivable on said display track, each said received insertable and removable partition converting a single pack path into two adjacent product paths of single width;

said fixed partitions and said received insertable and removable partitions on said display track establishing between adjacent partitions paths of optionally variable widths selected from the group consisting of product paths of single width, pack paths of double width and combinations thereof;

each said insertable and removable partition including a pair of oppositely directed first stops adjacent the front end thereof for barring the lead product in each of two adjacent product paths on opposite sides of said received insertable and removable partition from falling off the front of said display track;

said display track including a second stop at the front of each said pack path for barring the lead pack thereon from falling off the front of said display track.

2. A kit of claim 1 wherein, when a received one of said insertable and removable partitions converts a single pack path into two adjacent product paths, said second stop at the front of said converted pack path does not bar easy removal of the lead products from said two adjacent product paths.

3. The kit of claim 1 wherein the free end of each said first stop engages a respective one of a pair of adjacent fixed partitions.

4. The kit of claim 1 wherein each said first stop is a hoop stop of unitary, one-piece, integral construction with said insertable and removable partition, and each said second stop is an upstanding stop of unitary, one-piece, integral construction with said display track.

5. The kit of claim 4 wherein the free end of each said hoop stop engages a respective one of a pair of adjacent fixed partitions.

6. The kit of claim 4 wherein, when a received one of said insertable and removable partitions converts a single pack path into two adjacent product paths, said upstanding stop at the front of said converted pack path does not bar easy removal of the lead products from said two adjacent product paths.

7. A kit for forming a display and dispenser track assembly for dispensing products of single width, packs of double width, or simultaneously alternately products and packs, comprising:

(A) a display track defining a plurality of fixed partitions, each adjacent pair of said fixed partitions establishing there between a single pack path of double width;

(B) at least one insertable and removable partition receivable on said display track, each said received insertable and removable partition converting a single pack path into two adjacent product paths of single width;

said fixed partitions and said received insertable and removable partitions on said display track establishing between adjacent partitions paths of optionally variable widths selected from the group consisting of product paths of single width, pack paths of double width and combinations thereof;

each said insertable and removable partition including a pair of oppositely directed hoop stops at the front end thereof for barring the lead product in each of two adjacent product paths on opposite sides of said received insertable and removable partition from falling off the front of said display track, the free end of each said hoop stop engaging a respective one of a pair of adjacent fixed partitions; and

said display track including an upstanding stop at the front of each said pack path for barring the lead pack thereon from falling off the front of said display track;

when a received one of said insertable and removable partitions converts a single pack path into two adjacent product paths, said upstanding stop at the front of said converted pack path does not bar easy removal of the lead products from said two adjacent product paths.

* * * * *