Nov. 1, 1966

F. SCHOLER

3,282,232

LIQUID TRAYS FOR USE IN INCINERATORS AND FOR OTHER PURPOSES

Filed July 30, 1964

FIG.1

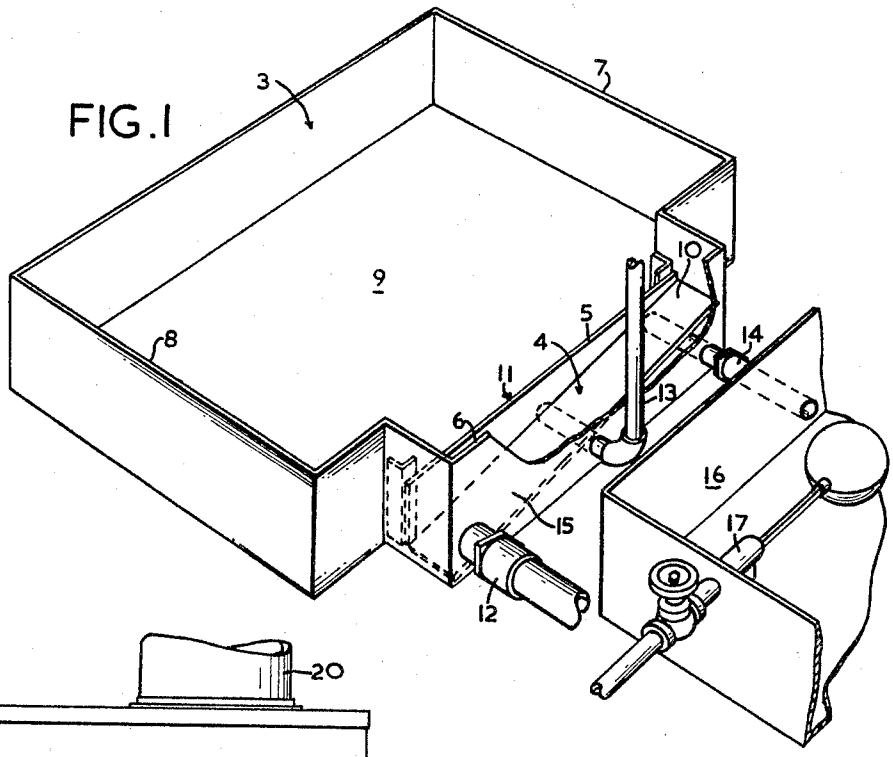

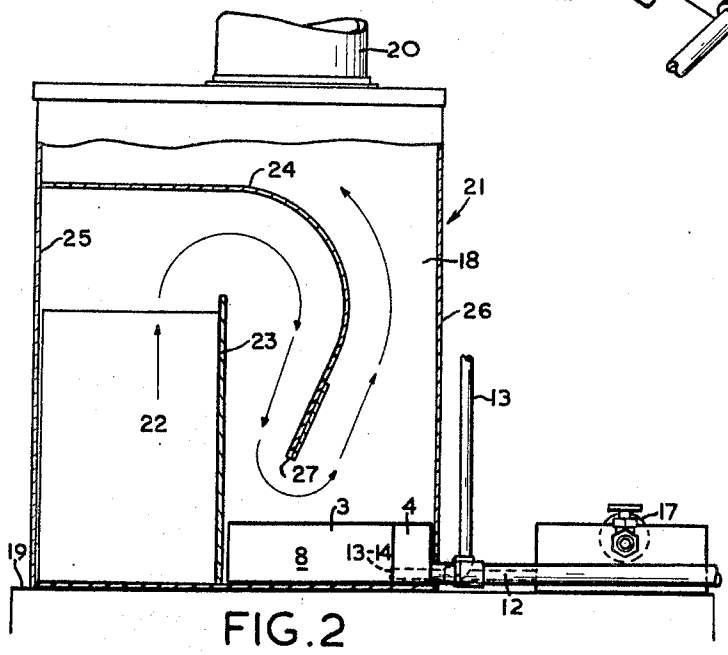

FIG.2

United States Patent Office

3,282,232

Patented Nov. 1, 1966

3,282,232

LIQUID TRAYS FOR USE IN INCINERATORS AND FOR OTHER PURPOSES

Felix Scholer, Castle Cove, New South Wales, Australia, assignor to Goodrid Incinerator Co. Pty. Limited, Sydney, New South Wales, Australia, a corporation of New South Wales, Australia

Filed July 30, 1964, Ser. No. 386,325
3 Claims. (Cl. 110—128)

This invention relates to trays or containers for holding liquids adapted for use in the soot arrestor of an incinerator.

Although the invention will be described principally for use with such an incinerator, it is not restricted to such a use.

The purpose of this invention, when used with an incinerator, is to reduce carbon deposits and ash nuisance to an absolute minimum.

According to the invention there is provided a soot arrestor for an incinerator and a liquid container in the soot arrestor for receiving and discharging soot and ash from the combustion gases passing through the soot arrestor. The soot arrestor comprises an enclosure having walls, a roof and a floor. A first partition extends upwards from the floor of the enclosure towards its roof to divide the enclosure into first and second lower compartments. A second partition extends laterally from the enclosure wall which forms one boundary of the first compartment. The second partition extends over the first partition and downwardly into the second compartment with a lower edge of said second partition being beneath the level of the upper edge of the first partition. An opening is provided in the floor of the first compartment for receiving combustion products from the incinerator and an opening is provided in the roof for receiving combustion products from the second compartment. A flue is connected at its lower end to the opening in the roof.

The liquid container is disposed on the floor of the enclosure in said second compartment below the lower edge of the second partition. Said container includes a weir wall dividing the container into a main liquid compartment and an auxiliary liquid compartment. The container further comprises first means for supplying liquid to the main compartment and means for maintaining the liquid at a level in the main compartment, which is approximately at the level at the upper edge of the weir wall. There is further provided second means near the floor of the main compartment for supplying flushing liquid to the main compartment and means for discharging from the auxiliary compartment liquid which has overflowed the weir wall from the main compartment.

A preferred form of the invention will now be described with reference to the accompanying drawings in which:

FIG. 1 is a perspective view of the container showing the weir and conduit connections; and,

FIG. 2 is a side elevation of an incinerator adapted to accommodate the container in the path of its flue gases.

In FIG. 1 there is shown a container having two container compartments 3 and 4 formed side-by-side therein. Each is rectangular in plan and compartment 4 is substantially shorter than compartment 3, the main compartment 3 being much wider than the auxiliary compartment 4. The weir wall upper edge 5 is horizontal at a level slightly below the level of the side wall 6 of the main compartment 3 and the two end walls 7 and 8. The floor 9 of the main compartment 3 is horizontal.

The floor 10 of the auxiliary compartment 4 slopes downwards and forwards from the rear end wall 7 of

the compartment 3. The weir wall 11 forms one of its side walls.

An outlet 12 from the auxiliary compartment 4 is formed through its side wall 15 at the bottom of the wall and at the lowermost part of the sloping floor 10. An entry pipe 13 for a back wash or flushing water supply is provided medially near the bottom of the wall 15 and passes under the floor 10 and into the main compartment 3. An entry pipe 14 for water to the main compartment 3 also enters the wall 15 and passes under the sloping floor 10.

The entry pipe 14 conveys water from a cistern 16 in which the water is maintained at a constant level by a ball controlled valve 17.

The container is made of any suitable metal or other fire resistant material. The tank height, overall dimensions and shape vary according to the capacity of the incinerator.

In use, the main compartment 3 is filled through the inlet pipe 14, the level being maintained automatically, e.g. by means of the float valve 17, in the cistern 16 at the level of the upper edge 5 of the weir wall 11.

The height of the water can be varied by means of adjustable weir plates inserted in slides near each end of the fixed weir plate according to the velocity and venturi action created by the partial vacuum in the furnace and the stack influence.

In use, the tray is placed in the exhaust flue 18 where it may receive material deposited from the combustion products passing from the combustion chamber of the incinerator 19 to the smoke stack 20.

In this respect, combustion products from the incinerator 19 pass into the casing or enclosure 21 through a flue 22 over a first partition 23 and under a second partition 24 secured at one end to wall 25 of the casing. Partition 24 extends downwards into the space between the partition 23 and the other wall 26 in inclined fashion towards partition 23 to define a minimum spacing therewith at the lower edge 27 of partition 24. The combustion products then flow under the lower edge 27 of partition 24 and upwards and outwards through 18 and 20.

Burning causes a partial vacuum within the fire chamber and, together with the influence of the stack, creates a high velocity flow of gases between the partitions and over the top of the water. This disturbs the water surface and causes wave action in the direction of the weir wall 11 with sufficient force to cause carbon deposit and ash fallout to be washed over the weir and down the ramp to the waste drain 12. While this burning cycle is taking place, the ballcock controlled cistern tank keeps the water at a constant level. The gases of primary combustion, having passed the partitions, as shown by the arrows in FIG. 2, and having been cleansed of fallout particles, are exhausted of oxygen. Reoxygenisation of the spent gases is achieved by their passing through the live steam rising from the boiling water surface and, having been so regenerated, they expand and complete the combustion cycle.

Some of the deposited solids may sink to the bottom of the main compartment 3 and form a sludge. At intervals back wash or flush water is forced through the inlet pipe 13 to the main compartment 3.

The purpose of the back wash is to allow pressure water from the mains to agitate any settlement that may have taken place during the burning cycle and thus to wash it over the weir plate and thence to the waste drain.

What I claim is:

1. In combination, a soot arrestor for an incinerator comprising an enclosure having walls, a roof and a floor, a first partition extending upwards from the enclosure

floor towards its roof and dividing the enclosure into first and second lower compartments, a second partition in the enclosure extending laterally from the enclosure wall which forms one boundary of the first compartment, said second partition extending over the first partition and downwardly into the second compartment with a lower edge of said second partition being beneath the level of the upper edge of the first partition, and opening in the floor of the first compartment for receiving combustion products from the incinerator, an opening in the roof for receiving combustion products from the second compartment and a flue connected at its lower end to the opening in the roof, and a container for a liquid on the floor of the second compartment below the lower edge of the second partition, said container including a weir wall dividing the container into a main liquid compartment and an auxiliary liquid compartment, first means for supplying liquid to the main compartment, means for maintaining the liquid at a level in the main compartment which is approximately at the level of the upper edge of the weir wall, second means near the floor of the main compartment for supplying flushing liquid to the

main compartment, and means for discharging from the auxiliary compartment liquid which has overflowed the weir wall from the main compartment.

2. The combination as claimed in claim **1**, wherein said second partition is inclined downwardly towards said first partition to define a minimum spacing therewith at the lower edge of said second partition.

3. The combination as claimed in claim **2**, wherein said container has a flat inclined floor in said auxiliary liquid compartment, said means for the discharge of liquid being located at the lower end of said inclined floor.

References Cited by the Examiner

UNITED STATES PATENTS

324,683	8/1885	Groesbeck et al.	110—28
1,788,410	1/1931	Runyon	55—250
2,484,277	10/1949	Fisher	55—248

FOREIGN PATENTS

531,629	1/1941	Great Britain.

KENNETH W. SPRAGUE, *Primary Examiner.*