(19) Europäisches Patentamt
European Patent Office
Office européen des brevets

(11) Publication number: **0 540 243 B1**

(12) EUROPEAN PATENT SPECIFICATION

(45) Date of publication of patent specification: **25.10.95**

(51) Int. Cl.[6]: **B41J 25/304**, B41J 11/46, B41J 21/16

(21) Application number: **92309640.8**

(22) Date of filing: **21.10.92**

(54) Print cartridge alignment in paper axis.

(30) Priority: **31.10.91 US 785650**

(43) Date of publication of application:
05.05.93 Bulletin 93/18

(45) Publication of the grant of the patent:
25.10.95 Bulletin 95/43

(84) Designated Contracting States:
DE FR GB IT

(56) References cited:
US-A- 4 709 246
US-A- 4 978 971

PATENT ABSTRACTS OF JAPAN vol. 6, no. 017 (M-109)30 January 1982 & JP-A-56 135 069 (RICOH) 22 October 1981

PATENT ABSTRACTS OF JAPAN vol. 11, no. 64 (M-565)26 February 1987 & JP-A-61 222 744 (CANON) 3 October 1986

PATENT ABSTRACTS OF JAPAN vol. 11, no. 187 (E-516)16 June 1987 & JP-A-62 16 672 (FUJITSU) 24 January 1987

(73) Proprietor: **HEWLETT-PACKARD COMPANY**
3000 Hanover Street
Palo Alto,
California 94304-1181 (US)

(72) Inventor: **Haselby, Robert D.**
14475 Yazoo Street
San Diego, California 92129 (US)
Inventor: **Nguyen, Michael A.**
Block 56, Cashew Park
Condominum 01-01 Cashew Road
Singapore 2367 (SG)

(74) Representative: **Colgan, Stephen James et al**
CARPMAELS & RANSFORD
43 Bloomsbury Square
London WC1A 2RA (GB)

Note: Within nine months from the publication of the mention of the grant of the European patent, any person may give notice to the European Patent Office of opposition to the European patent granted. Notice of opposition shall be filed in a written reasoned statement. It shall not be deemed to have been filed until the opposition fee has been paid (Art. 99(1) European patent convention).

EP 0 540 243 B1

PATENT ABSTRACTS OF JAPAN vol. 11, no. 225 (M-609)22 July 1987 & JP-A-62 041 074 (MATSUSHITA) 23 February 1987

PATENT ABSTRACTS OF JAPAN vol. 15, no. 134 (M-1099)3 April 1991 & JP-A-30 16 744 (NEC) 24 January 1991

IBM TECHNICAL DISCLOSURE BULLETIN. vol. 26, no. 2, July 1983, NEW YORK US page 584 DINAN 'print position locator'

Description

BACKGROUND OF THE INVENTION

The subject invention is generally directed to swath type printers, and more particularly to apparatus and techniques for vertical and horizontal alignment of the printheads of a multiple printhead swath type printer.

A swath printer is a raster or matrix type printer that is capable of printing a plurality of rows of dots in a single scan of a movable print carriage across the print media. The print carriage of a swath printer typically includes a plurality of printing elements (e.g., ink jet nozzles) displaced relative to each other in the media motion direction which allows printing of a plurality of rows of dots. Depending upon application, the separation between the printing elements in the media scan direction can correspond to the dot pitch for the desired resolution (e.g., 1/300th of an inch for 300 dot per inch (dpi) resolution). After one swath or carriage scan, the media can be advanced by number of rows that the printer is capable of printing in one carriage scan or swath (i.e., the swath height or swath distance). Printing can be unidirectional or bidirectional.

The printing elements of a swath printer are commonly implemented in a printhead that includes an array of printing elements such as ink jet nozzles. Depending upon implementation, the printhead comprises a removable printhead cartridge such as those commonly utilized in ink jet printers. Throughput of a swath type ink jet printer can be increased by utilizing multiple ink jet printhead cartridges to increase the height of a swath by the additional printhead cartridges. A consideration with multiple printhead cartridge swath printers is print quality degradation as a result of printhead mechanical tolerances (e.g. the uncertainty of printhead cartridge to printhead cartridge positioning, and uncertainty of variations due to cartridge insertions), and drop velocity differences between printhead cartridges, where such degradation can occur in both bidirectional and unidirectional printing. Mechanical tolerances of the printhead to print media spacing also causes print quality degradation in bidirectional printing, with one or a plurality of printhead cartridges.

Factory compensation for each printer manufactured and/or tight manufacturing tolerance control would address some of the factors contributing to print quality degradation, but would be extremely difficult and expensive. Moreover, manufacturing tolerance control might not be able to address the effects on the printer of aging and temperature, particularly as to electronic components of the printer.

JP-A-56135069 discloses a printer which measures printhead divergence relative to a boundary line of a paper guide. The prior art printer includes respective clocked counters that are started when an edge of a sheet of paper passes the boundary line of the paper guide and they respectively stopped when the edge of the sheet of paper is detected by a photosensor of a respective print head, whereby respective counts represent respective distances from the boundary line of the paper guide. The respective counts are compared with a preset reference to arrive at respective divergences, which are converted to time amounts utilised to control the recording starting time of each print head.

US-A-4 709 246 discloses a system for printing with a plurality of removable/cartridges including a carriage constructed to traverse a linear print zone and removable support such print/cartridges. A plurality of referencing surfaces are located respectively on each of the carriages, parallel to the direction of the carriages traverse. The carriage includes fastening mechanisms for moving supported print/cartridges into a precise detent relation with respect referencing surfaces of the carriages. The referencing surface portions of the system are adjustable to allow selective physical indexing of print/cartridges, either in registered or interlaced printing positions. A transverse location detection system detects and stores the relative transverse locations of the print/cartridges in either position so that print control electronics can coordinate the output of the print/cartridges transversely.

SUMMARY OF THE INVENTION

It would therefore be an advantage to provide methods and apparatus for detecting and compensating misalignments that affect print quality in a multiple printhead cartridge swath printer.

Another advantage would be to provide methods for automatically detecting and compensating misalignments that affect print quality in a multiple printhead cartridge swath printer.

The features of the invention are defined by Claim 1.

An embodiment of the invention will now be described with reference to the accompanying drawings in which:

FIG. 1 is a schematic perspective view of the major mechanical components of a multiple printhead swath printer employing the disclosed apparatus and techniques for aligning the operation of the multiple printheads thereof.

FIG. 2 is a schematic side elevational sectional view illustrating the relation between the downwardly facing ink jet nozzles and the print media of the printer of FIG. 1.

FIG. 3 is a schematic plan view illustrating the general arrangement of the nozzle arrays of the printhead cartridges of the printer of FIG. 1.

FIG. 4 is a detail view of a positionally adjustable printhead cartridge retaining shoe of the swath printer of FIG. 1.

FIG. 4A is a cross-section of a torsion bar support.

FIG. 5 is a detail view illustrating an example of a cam actuating mechanism for adjusting the position adjusting cam of the positionally adjustable printhead cartridge retaining shoe of FIG. 4.

FIG. 6 is a simplified block diagram of a printer controller for controlling the swath printer of FIG. 1.

FIG. 7 is a simplified sectional view of the optical sensor of the swath printer of FIG. 1.

FIG. 8 is a schematic diagram of the quad photodiode detector of the optical sensor of FIG. 7 that depicts the active areas of the photodiodes of the quad detector as well as circuitry for processing the outputs of the quad sensor.

FIG. 9 is a continuous plot of the response of the quad detector and associated output circuitry as a function of displacement of the image of a vertical line across the active areas of the quad detector along an axis that is perpendicular to the length of the line.

FIG. 10 illustrates in exaggerated form a series of printed offset vertical line segments which are utilized for calibration of the quad sensor outputs for determining horizontal position of vertical test line segments.

FIG. 11 illustrates in exaggerated form a plurality of vertical test line segments that can be utilized for horizontal alignment of the operation of the print cartridges of the swath printer of FIG. 1.

FIG. 12 illustrates in exaggerated form a plurality of vertical test line segments that can be utilized for horizontal alignment of the operation of the print cartridges of the swath printer of FIG. 1 for unidirectional printing.

FIG. 13 illustrates in exaggerated form a plurality of vertical test line segments that can be utilized for horizontal alignment of the operation of the print cartridges of the swath printer of FIG. 1 for bidirectional printing with a single cartridge.

FIG. 14 illustrates in exaggerated form a series of horizontal test line serpents that can be utilized for vertical alignment of the print cartridges of the swath printer of FIG. 1.

FIGS. 15A through 15C set forth a flow diagram of a procedure for calibrating the optical sensor of the printer of FIG. 1 for use in determining horizontal position of vertical test line segments.

FIG. 16A through 16C set forth a flow diagram of a procedure for horizontally aligning the operation of the print cartridges of the swath printer of FIG. 1.

FIG. 17A through 17G set forth a flow diagram flow diagram of a procedure for vertically aligning the operation of the print cartridges of the swath printer of FIG. 1.

DETAILED DESCRIPTION OF THE DISCLOSURE

In the following detailed description and in the several figures of the drawing, like elements are identified with like reference numerals.

Referring now to FIG. 1, set further therein is a schematic frontal quarter perspective view depicting, by way of illustrative example, major mechanical components of a swath type multiple printhead ink jet printer employing an alignment system in accordance with the invention for calibrating and correcting printhead misalignments, as viewed from in front of and to the right of the printer. The printer includes a movable carriage 51 mounted on guide rails 53, 55 for translational movement along the carriage scan axis (commonly called the Y-axis in the printer art). The carriage 51 is driven along the guide rails 53, 55 by an endless belt 57 which can be driven in a conventional manner, and a linear encoder strip 59 is utilized to detect position of the carriage 51 along the carriage scan axis, for example in accordance with conventional techniques.

The carriage 51 supports first and second cartridge retaining shoes 91, 92 located at the front of the carriage for retaining substantially identical removable first and second ink jet printhead cartridges C1, C2 (sometimes called "pens," "print cartridges," or "cartridges"). FIG. 1 shows the cartridge C2 in a removed condition, while in FIG. 5 shows the cartridge C2 in its installed position. As depicted in FIG. 2, the printhead cartridges C1, C2 include downwardly facing nozzles for ejecting ink generally downwardly to a print media 61 which is supported on a print roller 63 that is generally below the printhead cartridges.

For reference, the print cartridges C1, C2 are considered to be on the front of the printer, as indicated by legends on FIG. 1, while left and right directions are as viewed while looking toward the print cartridges, as indicated by labelled arrows on FIG. 1. By way of example, the print media 61 is advanced while printing or positioning so as to pass from beneath the cartridge nozzles toward the front of the printer, as indicated on FIG. 2, and is rewound in the opposite direction.

A media scan axis (commonly called the X-axis) as shown in FIG. 3 will be utilized as a reference for displacement of the media, as well as a reference for orientation of a line. The media

scan axis can be considered as being generally tangential to the print media surface that is below the nozzles of the printhead cartridges and orthogonal to the carriage scan axis. In accordance with prior usage, the media scan axis is conveniently called the "vertical" axis, probably as a result of those printers having printing elements that printed on a portion of the print media that was vertical. Also in accordance with known usage, the carriage scan axis is conveniently called the "horizontal axis". From a practical viewpoint, if the printed output of the printer of FIG. 1 were placed vertically in front of an observer in the same orientation as it would hang down from the print roller 63, a line printed by with a single ink jet nozzle and media movement rather than carriage movement would be "vertical," while a line printed with a single ink jet nozzle and carriage movement rather than media movement. If the print media containing such lines were positioned horizontally in front of an observer, the line that extends away from the observer can be considered vertical by common convention; and the line that extends sideways as to the observer can be considered horizontal by common convention. Accordingly, in the following description, printed lines aligned with the media scan axis will be called "vertical" lines, and printed lines aligned with the carriage scan axis will be called horizontal lines.

FIG. 3 schematically depicts the arrangement of the nozzle plates 101, 102 of the first and second cartridges C1, C2 as viewed from above the nozzles of the cartridges (i.e., the print media would be below the plane of the figure). Each nozzle plate includes an even number of nozzles arranged in two columns wherein the nozzles of one column are staggered relative to the nozzles of the other column. By way of illustrative example, each nozzle plate is shown as having 50 nozzles which are numbered as (a,1) through (a,50) starting at the lower end of the nozzle array with nozzles in the left column being the odd numbered nozzles and the nozzles in the right column being the even numbered nozzles, where "a" represents the printhead cartridge number. The distance along the media scan axis between diagonally adjacent nozzles, as indicated by the distance P in FIG. 3 is known as the nozzle pitch, and by way of example is equal to the resolution dot pitch of the desired dot resolution (e.g., 1/300 inch for 300 dpi). In use, the physical spacing between the columns of nozzles in a printhead is compensated by appropriate data shifts in the swath print data so that the two columns function as a single column of nozzles.

The first and second cartridges C1, C2 are side by side along the carriage scan axis and are offset relative to each other along the media scan axis, and can be overlapped by as much as about 3 nozzle pitches along the media scan axis. As described more fully herein, 2 nozzles in each pen are logically disabled as selected pursuant to a test pattern in order to bring the enabled nozzles closer to proper operational alignment along the vertical axis.

The second retaining shoe 92 is fixedly secured to the carriage 51, while the first cartridge retaining shoe 91 is pivotally secured to the carriage 51 by a flexurally deformable, torsion bar like support member 93 located at the lower rear part of the retaining shoe 91 near the plane of the nozzle plate of the first printhead cartridge C1 and generally parallel to the carriage scan axis. By way of illustrative example, the torsion bar like support member 93 is integrally formed with a backplate 95 of the first cartridge retaining shoe 91 and with a portion of the carriage frame, such that the first retaining shoe 91 is pivotable about a pivot axis PA that passes through the torsion bar like support member 93. The top of the first cartridge retaining shoe 91 includes a cam follower flange 97 that is structurally integral with the back plate 95 of the retaining shoe. The cam follower flange 97 is biased rearwardly against a position adjustment cam 111 by a pair of retaining springs 113 which are connected between the top of the carriage and the top of the first retaining shoe.

The adjustment cam 111 is rotatably mounted on a pin 115 on the carriage 51 and is shaped so as to increase the distance between the cam pin 115 and the retaining shoe flange 97 with increased counterclockwise rotation of the cam, as viewed from above. The cam is rotated by a cam lever 117 that is integral with the cam, and is engageable with a right cam stop 119 which limits the clockwise rotation of the cam. Thus, as the cam lever 117 is rotated counterclockwise away from the cam stop 119, the nozzle plate 101 of the first cartridge C1 is rotated downward about the pivot axis PA, which aims the nozzle plate of the first cartridge so that its print area is closer to the print area of the second cartridge along the media scan axis. Rotation of the adjustment cam 111 in the counterclockwise direction as viewed from above effectively positions the first print cartridge C1 closer to the second print cartridge C2.

The adjustment cam 111 is controllably moved pursuant to movement of the carriage 51 while the cam lever 117 is engaged against the downwardly extending tab 121a of a conveniently located pivoted adjustment lever arm 121 that can be pivoted so that the tab 121a is in or above the path of the cam lever 117 as the cam lever 117 moves with the carriage 51. As shown in FIG. 5, the cam actuator arm 121 can be in the proximity of one end of the carriage guide rails, and is actuated by an actuating lever 123 that is driven by a cam

follower 125 which in turn is controlled by a cam 127 on the output of a stepper motor 129. A bias spring 131 ensures that the cam actuator arm 121 is fully raised when actuated to be in the raised position.

It should be appreciated that the cam actuator arm 121 can be controlled by other mechanisms, and that the stepper motor 129 can be used of additional purposes. The use of an actuator arm 121 and carriage displacement relative to the actuator arm 121 for cam adjustment avoids the use a separate servo motor for cam adjustment.

For ease of discussion relative to figures depicting printed lines, the media scan direction will also be called the vertical direction and the carriage scan direction will be called the horizontal direction. Also Thus, the carriage moves to the left when it moves toward the cam actuator mechanism, and it moves the right when it moves away from the cam actuator mechanism. FIGS. 1, 3 and 5 generally include indications of the left and right directions.

As to swath advance, since the print media 61 enters beneath the print roller and is on top of the print roller when printed, the material first printed is closest to the bottom of the printed image as it hangs down from the print roller. Accordingly, printed subject matter depicted in the drawings will generally be regarded as having been printed from the bottom up, such that the bottom swath will have been printed first.

An optical sensor 65 is mounted on the carriage 51, for example to the right of and adjacent the first printhead cartridge retaining shoe 91. As discussed further herein, the optical sensor 65 is utilized to provide position data as to test lines printed on the print media 61 which is processed to compensate for horizontal and vertical misalignments between the first and second printhead cartridges C1, C2.

The movement of the carriage 51, the movement of the print media 61, the operation of the printhead cartridges C1 and C2, and the adjustment of the position of the first printhead cartridge C1 are controlled by a printer control system as shown in FIG. 6. The control system includes main controller 31 which controls the actions of the elements in the control system. A media axis drive motor encoder 35 provides information for the feedback control of a media axis driver motor 33 which moves the print roller 63 pursuant to media motion commands from the controller 31. Similarly, a carriage axis encoder 39 provides feedback information for the feedback control of a carriage scan axis drive motor 33 which positions the carriage 51 pursuant to carriage motion commands from the controller 31. A multi-channel analog-to-digital (A/D) converter 81 receives analog signals based on the outputs of the optical sensor 65 and provides digital versions of such analog signals for processing in accordance with the procedures described further herein. The controller further stores swath raster data into a swath data random access memory (RAM) 41, for example by converting input vector end points to raster data or by loading raster data directly from an appropriate source. The controller controls the transfer of swath raster data so as to map the ideal bit map in swath RAM to the media by selectively shifting the data in the horizontal sense so that appropriate data from the bitmap arrives at the print cartridge nozzles when the nozzles are over the appropriate region of the print media 61 as the carriage traverses in either carriage scan direction. This mapping will nominally contain appropriate shifts for each nozzle of each print cartridge to compensate for the two rows of nozzles on each print cartridge, and for the horizontal offset between print cartridges, where such shifts correspond to integral resolution dot pitches. As discussed further herein, nominal swath data shifts are adjusted or corrected to compensate for horizontal misalignments that are detected pursuant to the procedures described herein. The controller 31 also sets delays in the print delay controller 43 to compensate for horizontal alignment shifts that are less than one resolution dot pitch, in order to effect fine control of the final drop placement from the cartridges C1, C2. The print delay controller 43 controls print drivers 45 which provide ink firing pulses to the nozzles of the print cartridges C1, C2.

The print cartridges C1, C2 are mechanically closely aligned pursuant to manufacturing tolerances, and are finely aligned as disclosed herein so that the two printhead cartridges C1, C2 cooperatively function like a single printhead having a single column of 96 nozzles. In this manner, each scan or swath is 96 nozzle pitches wide (as measured in the media scan direction), and provides for an increased rate of printing as compared to the use of a single print cartridge. Alignment along the carriage scan axis is achieved by adjusting the swath data shifts to provide correction of the integral dot pitch portion of the detected horizontal misalignment, and then adjusting the timing of the firing of the ink jet nozzles to correct the fractional dot pitch portion of the detected horizontal misalignment. Alignment in the media scan direction is achieved by selecting the enabled nozzles of the printhead cartridges C1, C2 to correct the integral nozzle pitch portion of the detected vertical misalignment, and then adjusting the angular position of the first printhead cartridge C1 relative to the second printhead cartridge C2 via the adjustment cam 111 to correct the fractional nozzle pitch portion of the detected vertical misalignment. These

adjustments are made pursuant to the printing of test line segments, and then measuring the distances between the test line segments by use of the optical sensor 65 which is shown in simplified schematic cross-section in FIG. 7.

Referring particularly to FIG. 7, the optical sensor includes a housing 67 which supports imaging lenses 69, 71 that image a portion of the print media, for example on a one-to-one basis, onto a quad photodiode detector 73 located at the top of the housing. An illumination source 75, comprising for example an LED, is supported at the bottom of the housing so as to illuminate the print media that is in the vicinity of the optical axis of the imaging lenses 69, 71.

The quad photodiode detector 73 comprises four photodiodes A, B, C, D as schematically depicted in FIG. 8 which also illustrates in block form circuitry for processing the outputs of the detector photodiodes. The photodiodes A, B, C, D are depicted as boxes that represent their active areas. The active areas of the photodiodes A and B are aligned with the carriage scan axis as are the active areas of the photodiodes C and D. The active areas of the photodiodes A and C are aligned with the media axis, as are the active areas of the photodiodes B and D. Essentially, the photodiodes are positioned in a square whose sides are aligned with the carriage scan axis and the media scan axis.

A difference amplifier circuit 77 subtracts the output of the photodiode D from the output of the diagonally opposite photodiode A, while a difference amplifier circuit 79 subtracts the output of the photodiode C from the output of the diagonally opposite photodiode B. The analog difference outputs of the difference amplifier circuits 77, 79 are converted to digital by respective channels of the analog-to-digital converter 81, which for illustrative purposes are channels 0 and 1. Alternatively, individual A/D converters can be used for each of the difference outputs of the difference amplifier circuits 77, 79. Subtraction of the digital versions of the difference amplifier circuit outputs produces a difference signal H that is effectively the difference of the outputs of a dual detector wherein the vertically aligned photodiodes A and C function as one detector and the vertically aligned photodiodes B and D function as the other detector:

$$H = CH0 - CH1 = (A-D) - (B-C) = (A+C) - (B+D) \quad \text{(Equation1)}$$

where the photodiode detector outputs are represented by the reference letters used to identify the photodiode detectors, and where the outputs of the A/D converter channels 0 and 1 are respectively represented as CH0 and CH1. The difference signal H shall be called the sensor horizontal difference signal H since it will be utilized to determine the horizontal positions of vertical lines.

Analogously, adding the digital versions of the outputs of the difference amplifier circuits 77, 79 produces a difference signal V that is effectively the difference of the outputs of a dual detector wherein the horizontally aligned photodiodes A and B function as one detector and the horizontally aligned photodiodes C and D function as the other detector:

$$V = CH0 + CH1 = (A-D) + (B-C) = (A+B) - (C+D) \quad \text{(Equation2)}$$

The difference signal V shall be called the sensor vertical difference signal since it will be used to determine vertical position of horizontal lines.

FIG. 9 schematically illustrates a continuous plot of the sensor horizontal difference signal H as a function of displacement of the image of a vertical line across the active areas of the quad detector along the carriage scan axis. As the image begins to fall on the (A+C) side of the quad the difference signal H becomes negative since less photo current is developed in these segments. The difference signal H flattens out as the image is completely on the (A+C) side. The image then starts leaving the (A+C) side and entering the (B+D) side. The resulting difference signal H then becomes positive because more photo current is being generated by the (A+C) side and less is being generated by the (B+D) side. The slope of the center region of the plot of the difference signal H is ideally linear and is the "useful" region of the optical sensor. The flat positive flat portion of the plot corresponds to when the image of the line is only on the (B+D) side of the quad. Finally the difference signal H returns to the base line as the line image leaves the right side of the quad.

A continuous plot of the sensor vertical difference signal V as a function of displacement of the image of a horizontal line across the active areas of the quad detector along the media scan direction would be similar to that shown in FIG. 9, except that image position would be along the media scan axis. The center of the response of the difference signal V contains a useful linear region wherein the difference signal V can be utilized to sense the vertical position.

The field of view of the optical sensor must be less than the length of the line segment to be sensed, plus or minus the uncertainty of positioning accuracy along the line, so that the image of the line always extends beyond the active area of the quad sensor, for example as schematically illustrated in FIG. 8. In other words, the line segment must be extend in both directions beyond the field

of view of the optical sensor. The range of the optical sensor linear region about the center of the quad detector depends upon magnification, the width of the line segment being imaged, and the width of the individual photodiode segments of the quad detector. By way of illustrative example, for a magnification of essentially one, horizontal line segments having a width of 3 resolution dot pitches for vertical position sensing, vertical line segments having a width of 5 resolution dot pitches for horizontal sensing, and quad photodiode elements larger than the widths of the lines to be imaged, the range of the linear sensor region is about 3 resolution dot pitches for vertical position sensing and about 5 resolution dot pitches for horizontal position sensing.

Horizontal alignment can be achieved generally as follows. The optical sensor 65 is initially calibrated to determine a best fit straight line for the center of the plot or response of the horizontal difference signal H for the particular sensor so that the horizontal difference signal H value for a detected vertical line segment can be translated into position relative to a predetermined horizontal reference location. A plurality of vertical test line segments are then printed by each of the cartridges in each of the carriage scan directions, and the horizontal positions of the vertical test line segments are determined relative to the predetermined reference location by horizontally positioning the optical sensor so that all of the vertical test line segments are horizontally within the linear region of the sensor. The media is then displaced so that the sensor is respectively vertically aligned with the nominal vertical centers of the test line segments, and the horizontal difference signal H values for each of the line segments is read and utilized to determined line position in accordance with the best fit straight line. The differences between relative horizontal positions of the vertical test line segments are then utilized to adjust swath print data column shifts and the timing of nozzle firing of the printhead cartridges.

FIG. 10 illustrates in exaggerated form a slightly diagonal calibration "line" that is produced by one of the printheads in a unidirectional mode in conjunction with a calibration procedure set forth FIGS. 15A through 15C for calibrating sensor H difference signal response for horizontal alignment of the print cartridges.

Referring in particular to the flow diagram of FIGS. 15A through 15C, at 311 the print media is rewound and then advanced to a predetermined vertical start location of a clean unprinted area, so as to remove drive system backlash. At 313 the carriage is moved so as to align the optical sensor with the nominal horizontal center of the calibration line to be printed later (i.e., horizontally between the ends of calibration line), and at 315 the channel 0 and channel 1 outputs of the A/D converter 81 are read. At 317 the value of the sensor horizontal difference signal H is calculated in accordance with Equation 1, and the result is stored as a background value for the particular vertical location of the print media. At 319 the media is advanced one-half swath (i.e., 48 nozzle pitches along the media scan axis). At 321 a determination is made as to whether the media has been advanced by 26 half-swaths pursuant to step 319. If no, control transfers to 315 for the calculation and storage of another value of the H difference signal. If the determination at 321 is yes, control transfers to 323.

Pursuant to steps 313 through 321, background values of the horizontal difference signal H are determined for those locations which will be sensed by the optical sensor for sensing the vertical segments of the calibration line to be printed next.

At 323 the media is rewound past the predetermined vertical start location and then advanced to the predetermined vertical start location, so as to remove drive system backlash. At 325 the swath position for the first vertical segment CAL1 of the calibration line is set to a predetermined horizontal location corresponding to the horizontal start of the calibration line. At 327 the carriage is scanned in a predetermined direction, and a vertical line having a width of 5 resolution dot pitches is printed using 48 nozzles of a predetermined cartridge starting at the specified swath position. At 329 the specified swath position is incremented to offset the next vertical line segment one resolution dot pitch, for example to the left, and at 331 the media is advanced by one-half swath. At 333 a determination is made as to whether the media has been advanced 26 times pursuant to step 331. If no, control transfers to 327 to print another vertical segment of the calibration line.

Pursuant to steps 325 through 333, one printhead cartridge is caused to print in the same scan direction a series of vertical line segments CAL1 through CAL26 of substantially constant width, where the vertical line segments are respectively incrementally offset in a given horizontal direction by one resolution dot pitch.

At 335, the media is rewound past the predetermined vertical start location and then advanced to the vertical start position, so as to remove drive system backlash. At 337 the carriage 51 is moved so as to align the optical sensor 65 with the nominal horizontal center of the calibration line that was just printed in pursuant to steps 325 through 333 (i.e. in the same horizontal position as in step 313 above). At 339 the CH0 and CH1 outputs of the A/D converter are read. At 341 a background corrected value for the difference sig-

nal H is calculated by taking the difference between the CH0 and CH1 outputs, and subtracting the previously stored background value of H for the present vertical location. The background corrected value for H is stored as to the present vertical location, and at 343 the print media is advanced by one-half swath. At 345 a determination is made as to whether the media has been advance 26 times pursuant to step 343. If no, control transfers to 339 for sampling of further A/D CH0 and CH1 outputs. If yes, control transfers to 347.

Pursuant to steps 335 through 345, background corrected values of the difference signal H for vertical line segments of different horizontal positions are stored in an array, wherein position in the array represents horizontal distance from an undefined but fixed horizontal reference. Thus, if the 0th entry in the array is for the first vertical line, the horizontal positions of the vertical lines responsible for the array values can be considered equal to I resolution dot pitches from the 0 horizontal position which is defined by the first vertical line, where I corresponds to position in the array. As will be seen later, the array values are subtracted from each other for correction purposes, and the actual 0 horizontal location is not pertinent.

At 347 the stored background corrected values of the difference signal H are correlated with a template function that is similar to the linear region of the plot of FIG. 9 of the sensor difference signal H. The template function has fewer data points than the stored array of background corrected values of the difference signal H, and the array position of the difference signal H value at the center of the sequence of difference signal values that produces the maximum correlation is saved as the maximum correlation index. At 349 the background corrected value of the difference signal H corresponding to the maximum correlation index and the three background corrected values of the difference signal H on either side thereof are utilized for a linear regression that determines the best fit straight line:

$$H = A^{*}HPOS + B \qquad \text{(Equation3)}$$

where H is the background corrected difference signal H, HPOS is horizontal image position relative to a fixed 0 horizontal location, A is the slope, B is the hypothetical value of H according to the best fit line for a vertical line located at the fixed 0 horizontal location. The slope A will be utilized later to determine the position of vertical test lines such as those schematically shown in FIG. 11.

The foregoing calibration procedure effectively scans the calibration line across the sensor in the horizontal direction without horizontally moving the optical sensor 65 and without having to rely upon the resolution of print carriage positioning mechanism of the printer. Thus, this calibration technique and the technique described further herein for determining horizontal position of vertical lines are advantageously utilized in a printer that do not have sufficient resolution in its carriage positioning mechanism, since the resolution of the sensor is relied on rather than the resolution of the carriage positioning mechanism.

Referring now to FIGS. 16A through 16C, set forth therein is a flow diagram for providing horizontal alignment pursuant to printing vertical test line segments such as those schematically depicted in FIG. 11, determining the distances between such vertical test line segments, and utilizing the relative distance information to provide horizontal alignment corrections. At 351, timing delay corrections for the cartridges are set to zero, and swath data shifts are set to their nominal values that are based on conventionally considered factors such as nominal offsets between printhead cartridges, dimensions of the carriage, average ink drop flight times, and so forth. At 353 the media is positioned to allow printing in a clean area of the media, including for example the right margin. At 355 the carriage 51 is positioned at a predetermined horizontal location that is selected so that vertical test line segments to be printed later will be in the linear region of the difference signal H response for the sensor 65 as positioned at such predetermined horizontal location. At 357 the media is rewound and then advanced to a vertically align the sensor with the location of the nominal vertical center of the line to be printed later by the cartridge C1 on the first scan (identified as the line segment VL(1,1) in FIG. 11), and an array index I is set to 0. At 359 the sensor difference signal H is read and stored in a background array as BACKGROUND (I). At 361 the media is advanced one-half swath (i.e., one nominal nozzle array height), and at 363 a determination is made as to whether the media has been advanced 3 times pursuant to 361. If no, at 364 the index I is incremented by 1, and control transfers to 359 for another background reading of the sensor difference signal H. If the determination at 363 is yes, the media has been advanced 3 times pursuant to 361, control transfers to 365.

Pursuant to steps 353 through 363, print media background values for the difference signal H are calculated and stored for the media locations for which the sensor difference signal H will later be calculated in conjunction with determining the horizontal positions of vertical test lines printed in accordance with the following.

At 365 the media is rewound and then advanced to the vertical position where vertical line segments will be printed by both cartridges in a

first swath or scan. At 367 each of the cartridges prints a 5 dot resolution pitch wide vertical line segment at the designated horizontal location, using for example 48 nozzles in each cartridge, in a first scan direction. At 369 the media is advanced one swath height, and at 371 the cartridges print a 5 dot resolution pitch wide vertical line segment at the designated horizontal location, using for example 48 nozzles in each cartridge, in second scan direction that is opposite the first scan direction.

Pursuant to steps 365 through 371, vertical test line segments are printed by each cartridge in each scan direction at a designed horizontal location. As a result of misalignments relative to the nominal mechanical specifications, the vertical test line segments are horizontally offset relative to each other, as shown in exaggerated form in FIG. 11, wherein the vertical lines VL(a,b) were printed by the ath cartridge in the bth scan or swath.

At 373, the optical sensor 65 is horizontally positioned at the predetermined horizontal location as utilized in step 355 above. At 375 the print media is rewound and then advanced to vertically align the sensor 65 with the nominal center of the first vertical line segment printed by the first cartridge C1, and the array index I is set to 0. At 377 the channel 0 and channel 1 outputs of the A/D converter 81 are read, and at 379 a background corrected value for the sensor difference signal H is calculated, and a value VAL(I) is calculated in accordance with:

$$VAL(I) = (H - B)/A \qquad \text{(Equation4)}$$

where the values for B and A were determined pursuant to the sensor horizontal position calibration of FIGS. 15A through 15C. VAL(I) represents the horizontal position of the Ith vertical line relative to a 0 horizontal location that is common to all of the vertical lines, but need not be explicitly defined, as discussed above relative to the calibration procedure.

At 379 the media is advanced by one-half swath, and at 381 a determination of made as to whether the media has been advanced 3 times pursuant to 379. If no, at 382 the index I is incremented by 1, and control transfers to 377 for another reading of the sensor difference signal H for another vertical test line. If the determination at 381 is yes, the media has been advanced 3 times pursuant to 379, control transfers to 383.

Pursuant to steps 375 through 382, the horizontal positions of the vertical test lines are determined and stored in the array VAL(I).

At 383, the arithmetic mean of the measured horizontal positions of the vertical test lines is calculated, and at 385 the horizontal correction values for each pen in each direction is calculated by subtracting the measured horizontal position from the mean of the array of horizontal positions VAL(I). Since the horizontal positions are in units of dot resolution pitches, the correction values are also in dot resolution pitches. At 387 the integer portion of the horizontal correction values are utilized to determine swath data shift corrections for each cartridge for each scan direction that will remove the coarse amounts of alignment error. At 389 the fractional part of the horizontal correction values are utilized to calculate cartridge timing delay corrections for each printhead cartridge for each scan direction that will remove the residual alignment error remaining after coarse correction. At 391 the existing swath data shifts and cartridge timing delay corrections are updated in accordance with the correction values determined at 387 and 389. At 393 the steps 353 through 391 are repeated for further convergence until (a) the calculated corrections are sufficiently small, or (b) corrections have been calculated a predetermined number of times.

It should be appreciated that pursuant to the repetition of steps 353 through 391, the swath data shifts and cartridge timing delay corrections are repeatedly updated, with the first update being relative to nominal data shift values and timing delay corrections of zero as set pursuant to step 351, and updates being made to previously updated data shift values and firing corrections.

At 395 an alignment procedure similar to the foregoing can be executed for the situation where each printhead cartridge contains a plurality of independently controllable primitives that are essentially vertically stacked multiple nozzle printing units, wherein each unit includes a plurality of nozzles. Such alignment would correct for rotational misalignment of the cartridges, sometimes called theta-z misalignments. For the example of each printhead cartridge having two primitives, one primitive having the top 25 nozzles and the other primitive having the lower 25 nozzles, the alignment procedure would involve printing and position detecting a total of eight (8) vertical test line segments: one for each primitive for each direction. Pursuant to calculated corrections based on primitives, the data column shift values and timing delay corrections can be updated as desired, starting with the data column shifts and timing delay corrections as updated at 391 for alignment based on full cartridge vertical lines.

While the procedure of FIGS. 16A through 16C calculates correction values at 385 based on a single set of vertical test line segments, it should be appreciated that the horizontal positions of a plurality of sets of vertical test line segments can be utilized as follows:

1. The horizontal positions VAL(I, J) for a plurality of sets of vertical test lines located at dif-

ferent swath locations are calculated generally in accordance with steps 351 through 383, where I is the index for a set of vertical line segments at a given swath location and is indicative of cartridge and print direction, and J is the index for the sets of test lines. For alignment based on full nozzle height vertical lines printed by the two cartridges C1 and C2, then I=0,3; and J=0,N-1, where N sets of vertical lines are being averaged.

2. The average horizontal position AVAL(I) of the vertical lines printed by each pen in each direction is calculated as follows:

AVAL(0) = [VAL(0,0) + VAL(0,1) + ... + VAL(0,N-1)]/N
AVAL(1) = [VAL(1,0) + VAL(1,1) + ... + VAL(1,N-1)]/N
AVAL(2) = [VAL(2,0) + VAL(2,1) + ... + VAL(2,N-1)]/N
AVAL(3) = [VAL(3,0) + VAL(3,1) + ... + VAL(3,N-1)]/N

3. The arithmetic MEAN of the average horizontal positions and the corrections for each pen can be calculated as in steps 383 and 385 by substitution of the average horizontal positions AVAL(I) for the non-averaged horizontal positions utilized in steps 383 and 385:

MEAN = [AVAL(0) + AVAL(1) + AVAL(2) + AVAL(3)]/4
CORRECTION C1 DIRECTION RIGHT TO LEFT = MEAN - AVAL(0)
CORRECTION C21 DIRECTION RIGHT TO LEFT = MEAN - AVAL(1)
CORRECTION C1 DIRECTION RIGHT TO LEFT = MEAN - AVAL(2)
CORRECTION C21 DIRECTION RIGHT TO LEFT = MEAN - AVAL(3)

4. The foregoing correction values can then be utilized to arrive at swath data shifts and timing delay corrections in steps 387 and 389.

While the foregoing horizontal alignment procedure is directed to horizontal alignment for bidirectional printing with both cartridges, horizontal alignment for unidirectional printing by both cartridges can be achieved with procedures similar to those set forth in FIGS. 15A through 15C and FIGS. 16A through 16C. After calibration of the optical sensor 65, background values for the test area are determined, vertical test lines at a test swath position are printed by both cartridges in the scan direction for which alignment is being sought, and the horizontal positions of the test lines relative to each other are determined to arrive at swath data shift and/or timing delay corrections. The test pattern produced would be one of three possible test patterns as represented by three pairs of vertical lines (a), (b), (c) in FIG. 12. The vertical lines (a) would be printed if the horizontal alignment between the printhead cartridges was proper. The vertical lines (b) would result if the print cartridge C2 lags the print cartridge C1 (or the print cartridge C1 leads the print cartridge C2). The vertical lines (c) would result if the print cartridge C1 lags the print cartridge C2 (or the print cartridge C2 leads the print cartridge C1). The relative positions of the two vertical test line segments would be utilized to provide swath data shift corrections and cartridge timing delay corrections.

It would also be possible to provide for horizontal alignment for bidirectional printing by one print cartridge with procedures similar to those set forth in FIGS. 15A through 15C and FIGS. 16A through 16C. After sensor calibration, background values for the test area are determined, first and second vertical test lines at a selected swath location are printed in each of the carriage scan directions by the cartridge being aligned, and the horizontal positions of the vertical lines relative to each other are determined to arrive at data shift and/or timing delay corrections. The test pattern produced would be one of three possible test patterns as represented three pairs of vertical lines (a), (b), (c) in FIG. 13. The vertical lines (a) indicate that the spacing between the print cartridge and the print media is proper; the vertical segments (b) indicate that the spacing between the print cartridge and the print media is too small; and the vertical segments (c) indicate that the spacing between the print cartridge and the print media is too large. If the spacing is not proper, appropriate swath data shifts and/or cartridge delay corrections can be provided for one or both of the carriage scan directions.

Vertical alignment can generally be achieved by printing a plurality of non-overlapping horizontal test lines with at least one nozzle of each of the printhead cartridges, utilizing the optical sensor 65 to precisely detect the vertical positions of the plurality of non-overlapping horizontal test line segments relative to a fixed reference, and processing the relative positions to arrive at an adjustment for the position of the first printhead cartridge C1. FIG. 14 sets forth by way of illustrative example horizontal test line segments HL(1,50), HL(2,1), HL(2,5), which are respectively printed by nozzle 50 of the first print cartridge, the nozzle 1 of the second print cartridge, and the nozzle 5 of the second cartridge; and FIGS. 17A through 17G set forth a flow diagram of a procedure for achieving vertical alignment pursuant to printing and detecting the relative positions of such lines. It should be appreciated that the horizontal line serpents are identified in the

form of HL(c,d) where c identifies the cartridge number and d identifies the nozzle. Pursuant to the flow diagram of FIGS. 17A through 17G, the adjustment cam 111 is rotated to a known position, background values for the sensor difference signal V are calculated for locations on the print media where the sensor will be positioned for detecting the positions of horizontal test line segments to be printed later, the horizontal test line segments are printed, and the positions of the horizontal test line serpents are determined by incrementally moving the print media relative to a fixed start position and calculating a value for the sensor difference signal V at each incremental position.

Referring in particular to FIGS. 17A through 17G, at 511 the carriage is moved so that the cam lever 117 is to the right of the cam actuator arm 121 which is in the raised position, and at 513 the cam actuator arm 121 is lowered. At 515 the carriage 51 is moved to the left so that the cam lever 117 is engaged by the cam actuator arm 121 and rotated against the right cam stop 119. At 517 the carriage 51 is moved to the right by one-quarter inch to disengage the cam actuator arm 121 from the cam lever 117, and at 519 the cam actuator arm 121 is raised. At 521 the carriage 51 is moved to the left so that the cam lever 117 is to the left of the actuator arm 121, and at 523 the actuator arm 121 is lowered. At 525 the carriage 51 is moved to the right to remove linkage backlash, and to move the cam lever 117 from the cam stop 19 to a known initial position relative to the carriage 51. At 527 the carriage 51 is moved to the left by one-quarter inch to disengage the cam lever 117 from the cam actuator arm 121, and at 529 the cam actuator arm 121 is raised.

Pursuant to steps 511 through 525, the cam lever 117 is set to an initial known position with respect to the carriage 51. The carriage position along the carriage scan axis after moving the cam lever 117 to the initial known position is saved as a carriage reference position for later use to advance the cam lever further away from the right cam stop 119 (i.e., counterclockwise as viewed from above), as described further herein. Generally, the final carriage position corresponding to the final adjusted cam lever position will be based on the saved carriage reference position and a calculated additional carriage displacement necessary to move the cam lever 117 to its final adjusted position. Thus, for the final adjustment, the cam actuator arm 121 will be raised and the carriage 51 will be positioned so that the cam lever is to the left of the actuator arm 121. The cam actuator arm 121 would then be lowered, and the carriage 51 would be moved to the right to the final carriage position for cam adjustment, so as to move the cam lever 117 in a counterclockwise direction, as viewed from above, from the initial known position.

At 537 the carriage is positioned so that the optical sensor 65 is positioned over the location on the print media 61 of the nominal horizontal center of the horizontal line HL(2,1) line to be printed later. At 539 the print media 61 is rewound past a predetermined start location that will be used for all sensor detection operations, and is then advanced to the predetermined start location so as to remove backlash in the media drive gear train. The predetermined start location is selected so that all of the horizontal test lines will be close to the center of a vertical scan of 50 resolution dot pitches, for example. At 541 the channel 0 and channel 1 outputs of the A/D converter 81 are read, and a value of the background value of the difference signal V is calculated pursuant to Equation 2 for the particular vertical position of the print media 81. At 543 the background value for the present vertical location is stored in an array for the horizontal line HL(2,1), and at 545 the print media 61 is advanced by one resolution dot pitch. At 547 a determination is made as to whether the media 61 has been advanced 50 resolution dot pitches since the media was positioned at the predetermined start location in step 537. If no, control returns to 541 for calculation of further media background values of the sensor difference signal V. If the determination at 547 is yes, the media 61 has been advanced 50 times, the process continues to step 549.

Pursuant to steps 537 through 547, background values of the sensor difference signal V are calculated for each of the positions on the media for which values of the sensor difference signal V will be calculated in conjunction with determining the position of the horizontal line HL(2,1) to be printed later. The background values will later be subtracted from the values of the sensor difference signal V calculated for the same locations for determining the position of the horizontal line HL(2,1) after such line has been printed.

Steps 549 through 559 are similar to steps 537 through 547, and are performed to obtain media background values of the sensor difference signal V for the media positions for which values of the sensor difference signal V will be calculated in conjunction with determining the position of the horizontal line HL(1,50).

Steps 561 through 571 are also similar to steps 537 through 547, and are performed to obtain media background values of the sensor difference signal V for the media positions for which values of the sensor difference signal V will be calculated in conjunction with determining the position of the horizontal line HL(2,5).

At 572 the media drive is backed and then advanced to the location where the test lines are to

be printed. At 573 one nozzle wide horizontal lines corresponding to the test lines are printed by the nozzles (2,5), (1,50), and (2,1) in one scan, and at 575 the print media is advanced by one resolution dot pitch. At 577 a determination is made as to whether the one nozzle wide test lines have been printed three times. If no, control returns to 573 to print further one nozzle wide test lines at the same horizontal locations. If the determination at 577 is yes, the one nozzle wide test lines have been printed three times, control transfers to 353. Essentially, the steps 573 through 577 causes the printing of horizontal test lines which are three nozzles wide as measured in the media scan direction, which provides for a larger optical sensor output.

At 579 the carriage is positioned so that the optical sensor 65 is positioned over the location of the nominal horizontal center of the horizontal test line segment HL(2,1). At 581 the print media 61 is rewound past the predetermined start location utilized for all sensor detection operations, and is then advanced to the predetermined start location so as to remove backlash in the media drive gear train. At 583 the channel 0 and channel 1 outputs of the A/D converter 81 are read, and a background corrected value for the difference signal V is calculated. At 585 the background corrected difference value for the present vertical media location is stored in the result array for the horizontal line HL(2,1), and at 587 the print media 61 is advanced by one resolution dot pitch. At 589 a determination is made as to whether the media 61 has been advanced 50 resolution dot pitches since the media was positioned at the predetermined start location in step 579. If not, control returns to 583 for calculations of further values of the sensor difference signal V.

If the determination at 589 is yes, the media has been advanced 50 times, at 591 the background corrected difference signal V data is correlated with a signal template that resembles the useful center portion of an ideal curve of the difference signal V. The template function has fewer data points than the stored array of background corrected values of the vertical difference signal V, and the array position of the vertical difference signal value at the center of the sequence of background corrected difference signal values that produces the maximum correlation is saved as the maximum correlation index. At 593 the background corrected value of the vertical difference signal V corresponding to the maximum correlation index and the three background corrected values of the difference signal V on either side thereof are utilized for a linear regression that determines the best fit straight line:

$$V = A*VPOS + B \qquad \text{(Equation5)}$$

where V is the background corrected vertical difference signal V calculated at step 583, VPOS is vertical line position relative to predetermined vertical start location, A is the slope, B is the hypothetical value of V according to the best fit line for a horizontal line located at the predetermined vertical start location. At 595 the vertical position for the line HL(2,1) relative to the predetermined vertical start location is set equal to -B/A, which follows from setting V equal to zero in Equation 5 above.

Pursuant to steps 579 through 595, values of the sensor vertical difference signal V are determined for locations spaced one resolution dot pitch apart over a vertical range that extends above and below the horizontal test line segment HL(2,1) in order to calculate a vertical position for the line relative to the predetermined vertical start location.

Steps 597 through 612 are performed to determine the vertical position of the line HL(1,50) relative to the predetermined vertical start location, and are similar to steps 579 through 595.

Steps 613 through 629 are performed to determine the vertical position of the line HL(2,5) relative to the predetermined vertical start location, and are also similar to steps 579 through 595.

At 631 a pen correction value PEN CORR is calculated by subtracting V(1,50) from V(2,0), and at 633 a gear train correction value GEAR CORR is calculated by dividing the nominal distance between the nozzles (2,5) and (2,1) (i.e., 4 dot pitches) by the calculated distance between such nozzles. At 635 the pen correction value PEN CORR calculated at 631 is multiplied by the gear correction value GEAR CORR to arrive at a final pen correction value PEN CORR. From the calculations for the final pen correction value PEN CORR, it should be appreciated that a positive value of PEN CORR indicates no overlap between the cartridge C1 nozzles and the cartridge C2 nozzles, while a negative value of PEN CORR indicates overlap.

The gear train correction value GEAR CORR corrects for cyclical gear errors in the media drive mechanism that could result in a slightly different gear ratio in the region of the horizontal test lines that are being measured. It is a second order effect but can be normalized using the measurement procedure described above so as to reference the misalignment distance (which is between the horizontal lines HL(2,1) and HL(1,50)) to the measured gear compensation distance (which is between HL(2,1) and HL(2,5)), rather than referencing the misalignment distance to an absolute rotation of the media drive motor encoder.

At 637, the lowermost enabled nozzles for the cartridges C1, C2 and a PEN MOTION value are determined by comparing the final pen correction

value PEN CORR with certain empirically determined limits.

If PEN CORR is greater than or equal to 1.0 and less than 4.0, Case 1 applies: low nozzle for cartridge 2 is (2,1), low nozzle for cartridge C1 is (1,3), and PEN MOTION is equal to -(PEN CORR - 1).

If PEN CORR is greater than or equal to 0.0 and less than 1.0, Case 2 applies: low nozzle for cartridge 2 is (2,1), low nozzle for cartridge C1 is (1,2), and PEN MOTION is equal to -PEN CORR.

If PEN CORR is greater than or equal to -1.0 and less than 0.0, Case 3 applies: low nozzle for cartridge 2 is (2,1), low nozzle for cartridge C1 is (1,1), and PEN MOTION is equal to -(PEN CORR + 1).

If PEN CORR is greater than or equal to -2.0 and less than -1.0, Case 4 applies: low nozzle for cartridge 2 is (2,2), low nozzle for cartridge C1 is (1,1), and PEN MOTION is equal to -(PEN CORR + 2).

If PEN CORR is greater than or equal to -3.0 and less than -2.0, Case 5 applies: low nozzle for cartridge 2 is (2,3), low nozzle for cartridge C1 is (1,1), and PEN MOTION is equal to -(PEN CORR + 3).

Pursuant to Cases 2 through 5 in step 637, appropriate sets of nozzles are selected for the printhead cartridges such that the vertical distance between the uppermost enabled nozzle of the cartridge C1 and the lowermost enabled nozzle of cartridge C2 is greater than or equal to 1 nozzle pitch but less than 2 nozzle pitches. This effectively implements the integer portion of the calculated correction. The fractional part of the calculated correction will be implemented by adjusting the position of the cartridge C1 so that the vertical distance between the uppermost enabled nozzle of the cartridge C1 and the lowermost enabled nozzle of cartridge C2 is substantially one nozzle pitch. Thus, as to Cases 2 through 5, the cam adjustment will be less than one nozzle pitch. Effectively, if there is overlap or if there is not overlap and the vertical distance between the top nozzle of the cartridge C1 and the bottom nozzle of the cartridge C2 is less than one nozzle pitch, nozzle selection is utilized in such that the vertical distance between the uppermost enabled nozzle of the cartridge C1 and the lowermost enabled nozzle of cartridge C2 is greater than or equal to 1 nozzle pitch but less than 2 nozzle pitches. Cam adjustment provides for the residual correction.

Case 1 is a special case where the nozzles of the cartridges C1, C2 do not overlap along the vertical direction with the cam in the reference position, and the cam adjustment must be greater than one nozzle pitch.

By way of illustrative example, a nominal nozzle overlap between cartridges of about 1 to 2 nozzle pitches and a total cam actuated mechanical adjustment range for the print cartridge C1 of about $2\frac{1}{2}$ nozzle pitches provide for a total adjustment range of about ±4 nozzle pitches to correct for print cartridge manufacturing tolerances, retaining shoe manufacturing tolerances, and cartridge insertion tolerances.

The total equivalent adjustment of the printhead cartridge C1 to the cartridge C2 is thus achieved by (a) selecting the appropriate series of nozzles for use and (b) mechanically moving the print cartridge C1 to remove any misalignment remaining after nozzle selection. Only Case 1 of step 637 requires moving the print cartridge C1 more than one nozzle pitch toward the print cartridge C1, since Case 1 is for the situation where the cartridges are too far apart along the media scan axis and correction by nozzle selection is not possible.

For the arrangement shown in FIG. 14, Case 4 would apply since the PEN CORR for the lines HL(2,1) and HL(1,50) as shown would be greater than -2.0 and less than -1.0 resolution dot pitches. PEN CORR would be a positive fraction less than 1.0, which means that nozzle (1,48) will be brought closer to nozzle (2,2) along the media scan axis.

At 639 the high nozzles for each cartridge are determined by adding 47 to the low nozzle numbers, and at 641 the carriage travel distance CAM DIST in linear encoder counts for cam adjustment is calculated by multiplying PEN MOTION by ARM CONSTANT, where ARM CONSTANT is a constant that converts PEN MOTION, which is the number of nozzle pitches that cartridge C1 is to be brought closer along the media scan axis to the cartridge C1, to carriage displacement required to move the cam lever 117 with the cam actuator arm 121. ARM CONSTANT can be determined analytically or empirically, and the linear relation between CAM DIST and PEN MOTION is based on the cam 111 being designed so that an essentially linear relation exists between (a) carriage motion while moving the cam arm and (b) effective nozzle displacement along the media scan axis.

Alternatively, CAM DIST can be non-linearly related to PEN MOTION, and such relation can be derived analytically or empirically. Empirical data can be produced, for example, by incrementally positioning the cam pursuant by moving the carriage to known locations spaced by a predetermined number of encoder counts and measuring the resulting values of PEN CORR at each of the carriage locations. Pursuant to the empirical data, a function or look-up table scheme can be produced to relate cam moving carriage motion to change in nozzle distance.

At 643, with the cam actuator in the raised position, the carriage is moved to the left side thereof. At 645 the cam actuator arm is lowered, and at 649 the carriage is moved to the right to a position equal to the carriage reference position saved previously at step 525 and the CAM DIST value calculated above in step 641. This in effect moves the cam an amount corresponding to the carriage movement of CAM DIST, since in absolute scan axis encoder position the cam was left at the reference position saved at step 525. At 651 the carriage is moved left by 1/4 of an inch so as to clear the cam arm from the cam adjustment actuator, and at 653 the cam adjustment actuator arm is raised. The vertical axis or media axis alignment procedure is then completed.

In the foregoing procedure for vertical alignment, the logically enabled nozzles are selected to correct the calculated misalignment to the closest integral nozzle pitch, except for Case 1 in step 637, and any remaining fractional dot pitch correction, as well as the correction for Case 1, is made in a fixed direction by physical carriage dimensional adjustment. It is also contemplated that the vertical alignment can be achieved by using only selection of logically enabled nozzles, for example in a swath printer having a sufficiently high resolution so that the residual fractional dot pitch errors do not produce objectionable print quality, and further having mechanical tolerances that assure overlapping or non-overlap with the vertical distance between the top nozzle (1,1) of the cartridge C1 and the bottom nozzle (2,50) of the cartridge C2 being less than one nozzle pitch. The enabled nozzles would then be selected as desired so that the enabled nozzles are non-overlapping, for example on the basis of print quality, achieving a remaining error of less than one nozzle pitch, or achieving a vertical distance between the top enabled nozzle of the cartridge C1 and the bottom enabled nozzle of the cartridge C2 that closest to one nozzle pitch, even if the resulting vertical distance is greater than one nozzle pitch.

While the foregoing disclosure sets forth one procedure for detecting relative positions of horizontal test line segments and another procedure for detecting relative positions of vertical test line segments, it should be appreciated that the procedure for horizontal test lines can be adapted for vertical test lines, and the procedure for vertical test lines can be adapted to horizontal test lines, depending upon the resolution and accuracy of the carriage positioning and media positioning mechanisms with which the procedures are implemented. It should also be appreciated as to detecting the positions of horizontal and vertical test lines that other types of sensors could be utilized, including for example charge coupled device (CCD) arrays. As a further alternative one dual detector could be utilized for detecting the positions of horizontal lines, and another dual detector could be utilized for detecting vertical lines.

While the disclosed apparatus and techniques for alignment of print element arrays have been discussed in the context of an ink jet printer having two printheads, the disclosed apparatus and techniques can be implemented with ink jet printers which have more than two printheads or nozzle arrays arranged to increase swath height, and also with other types of raster type printers such as pin type impact printers. Further, the horizontal alignment techniques can be implemented to correct for bidirectional printing errors of a single print element array printer such as a single cartridge ink jet printer.

The foregoing has been a disclosure of apparatus and techniques for efficiently and reliably achieving alignment of the printhead cartridges of a multiple printhead swath printer, which provides for improved continuous graphics throughput with high print quality. The disclosed apparatus and techniques in particular provide for high print quality with bidirectional printing with a multiple printhead ink jet printer. The disclosed apparatus and techniques advantageously avoid extremely tight mechanical tolerances, compensate for processing variations as well as voltage and temperature effects of electrical components, and compensate for print cartridge mounting errors that result from insertion of the cartridges into the cartridge retaining shoes which cannot be corrected by manufacturing tolerance control.

Although the foregoing has been a description and illustration of specific embodiments of the invention, various modifications and changes thereto can be made by persons skilled in the art without departing from the scope of the invention as defined by the following claims.

Claims

1. A method of aligning the operation of ink jet printhead cartridges (C1,C2) along a media scan axis in a swath printer having (i) a carriage (51) movable along a horizontal carriage scan axis in first and second carriage scan directions, (ii) first and second ink jet printhead cartridges (C1,C2) supported by the movable carriage (51) for printing onto a print media (61) that is selectively movable along a vertical media scan axis, each printhead cartridge (C1,C2) having a plurality of ink jet nozzles (101,102) arranged along the media axis such that the nozzles (101,102) of each cartridge (C1,C2) are spaced apart along the media axis, the cartridges (C1,C2) being positioned side-

by-side along the carriage scan axis and offset along the media scan axis such that the ink jet nozzles (101,102) of the first and second printhead cartridges (C1,C2) can overlap along the media axis; and (iii) an optical sensor (65) supported by the movable carriage (51) for imaging a horizontal line and for providing an output indicative of a vertical position of said line within a vertical operating range of the optical sensor (65), the method comprising the steps of:

(a) causing the first and second printhead cartridges (C1,C2) to print two non-overlapping horizontal test line segments (HL) that extend along the carriage scan axis, wherein one horizontal test line segment is printed with a selected nozzle of the first printhead cartridge (C1) and the other horizontal test line segment is printed with a selected nozzle of the second printhead cartridge (C2);

(b) determining, with the optical sensor (65), respective vertical positions of the horizontal test line segments (HL) along the media scan axis;

(c) determining a measured vertical distance along the media scan axis between the two horizontal test line segments; and

(d) adjusting the operation of the first and second printhead cartridges (C1,C2) along the media axis by enabling selected nozzles, and by adjusting the position of the first printhead cartridge (C1) relative to the second printhead cartridge (C2) on the basis of the measured vertical distance between the two horizontal test line segments so that the enabled nozzles of the first cartridge (C1) and the enabled nozzles of the second cartridge (C2) do not overlap along the media scan axis, and so that the enabled nozzle of the first cartridge (C1) and enabled nozzle of the second cartridge (C2) that are closest along the media scan axis are spaced apart along the media scan axis by substantially one nozzle pitch (P).

2. A method according to Claim 1, further including the steps of:

(e) causing the second printhead cartridge (C2) to print with a selected nozzle thereof a third horizontal test line segment that extends along the carriage scan axis, wherein the third line segment is non-overlapping with the first and second horizontal test line segments;

(f) determining, with the optical sensor (65), a vertical position of the third horizontal test line segment along the media scan axis;

(g) determining a measured vertical distance along the media scan axis between the second and third horizontal test line segments; and

(h) calculating a media advance mechanism compensation factor by dividing (a) a nominal distance between the selected nozzles of the second printhead cartridge (C2) by (b) the measured vertical distance between the second and third horizontal test line segments; and

(i) multiplying the measured vertical distance between the first and second test line segments by the media advance mechanism compensation factor to provide a cartridge position correction factor;

and wherein step (d) also includes the step of enabling selected nozzles adjusting the position of the first and second printhead cartridges (C1,C2) relative to each other on a basis of the position correction factor, so that the enabled nozzle of the first cartridge (C1) and the enabled nozzle of the second cartridge (C2) that are closest along the media scan axis are spaced apart along the media scan axis by substantially one nozzle pitch (P).

3. A method according to Claim 1 or 2, wherein the position of the first cartridge (C1) is adjusted relative to the position of the second cartridge (C2) by rotating the first cartridge (C1) about an axis parallel to the carriage scan axis, whereby the nozzles of the first cartridge (C1) are moved relative to the nozzles of the second printhead cartridge (C2) along the media scan axis.

4. A method according to Claim 1, wherein, in step (d) selected nozzles of each printhead cartridge are enabled on the basis of the said measured vertical distance, such that the enabled nozzles of the printhead cartridges (C1,C2) do not overlap along the media axis; and the relative positions of the cartridges (C1,C2) are adjusted on the basis of said measured vertical distance, so that the enabled nozzle of the first cartridge (C1) and the enabled nozzle of the second cartridge (C2) that are closest along the media scan axis are spaced apart by substantially one nozzle pitch (P) along the media scan axis.

5. A method according to Claim 2, wherein, in step (d) selected nozzles of each print cartridge (C1,C2) are enabled on the basis of the cartridge position correction factor such that the enabled nozzles of the print cartridges do

not overlap along the media scan axis; and the relative positions of the cartridges (C1,C2) are adjusted so that the enabled nozzle of the first cartridge (C1) and the enabled nozzle of the second cartridge (C2) that are closest along the media scan axis are spaced apart by substantially one nozzle pitch (P) along the media scan axis.

6. A method according to Claim 4 or 5, wherein the selected nozzles are enabled so that the enabled nozzle of the first and second cartridges (C1,C2) that are closest along the media scan axis are spaced apart by more than one nozzle pitch (P) along the media scan axis and thereafter the relative positions of the cartridges are adjusted to said one nozzle pitch spacing.

7. A method according to Claim 4 or 5, wherein the relative positions of the first and second cartridges (C1,C2) are adjusted by rotating first printhead cartridge (C1) about an axis parallel to the carriage scan axis, whereby the nozzles of the first cartridge (C1) are moved closer to the nozzles of the second cartridge (C2) along the media scan axis.

8. A method according to any preceding Claim, where step (b) includes:

(b1) moving the printhead media (61) to a predetermined vertical start location such that the sensor (65) is displaced along the media scan axis from all of the horizontal test line segments;

(b2) horizontally moving the carriage (51) to align the optical sensor (65) horizontally with a nominal centre of a selected one of the horizontal test line segments;

(b3) incrementally moving the print media (61) by a predetermined amount such that the selected horizontal test line segment is incrementally scanned along the media scan axis and through the active area of the optical sensor (65) which remains stationary, and such that the optical sensor (65) is positioned at a series of locations having the same position along the carriage scan axis;

(b4) reading the optical sensor output for each of the series of locations at which the optical sensor (65) is positioned to produce a series of position samples for the scanned horizontal test line segments;

(b5) determining a vertical position of the scanned horizontal test line segment from the series of position samples; and

(b6) performing steps (b2)-(b5) for each remaining horizontal text line segment.

Patentansprüche

1. Ein Verfahren des Ausrichtens des Betriebs von Tintenstrahl-Druckkopfkassetten (C1, C2) entlang einer Medienabtastachse in einem Durchlaufdrucker mit (i) einem Wagen (51), der entlang einer horizontalen Wagenabtastachse in eine erste und eine zweite Wagenabtastrichtung bewegbar ist, (ii) einer ersten und einer zweiten Tintenstrahl-Druckkopfkassette (C1, C2), die von dem bewegbaren Wagen (51) getragen werden, um auf ein Druckmedium (61) zu drucken, das entlang einer vertikalen Medienabtastachse selektiv bewegbar ist, wobei jede Druckkopfkassette (C1, C2) eine Mehrzahl von Tintenstrahldüsen (101, 102) aufweist, die entlang der Medienachse angeordnet sind, derart, daß die Düsen (101, 102) jeder Kassette (C1, C2) entlang der Medienachse voneinander beabstandet sind, wobei die Kassetten (C1, C2) nebeneinander entlang der Wagenabtastachse positioniert sind und entlang der Medienabtastachse versetzt sind, derart, daß die Tintenstrahldüsen (101, 102) der ersten und der zweiten Druckkopfkassette (C1, C2) entlang der Medienachse überlappen können; und (iii) einem optischen Sensor (65), der von dem bewegbaren Wagen (51) getragen wird, um eine horizontale Linie abzubilden, und um eine Ausgabe, die eine vertikale Position der Linie anzeigt, in einem vertikalen Betriebsbereich des optischen Sensors (65) zu liefern, wobei das Verfahren folgende Schritte aufweist:

a) Bewirken, daß die erste und die zweite Druckkopfkassette (C1, C2) zwei nicht-überlappende horizontale Testliniensegmente (HL) drucken, die sich entlang der Wagenabtastachse erstrecken, wobei ein horizontales Testliniensegment mit einer ausgewählten Düse der ersten Druckkopfkassette (C1) gedruckt wird, und das andere horizontale Testliniensegment mit einer ausgewählten Düse der zweiten Druckkopfkassette (C2) gedruckt wird;

b) Bestimmen jeweiliger vertikaler Positionen der horizontalen Testliniensegmente (HL) entlang der Medienabtastachse mit dem optischen Sensor (65);

c) Bestimmen eines gemessenen vertikalen Abstands entlang der Medienabtastachse zwischen den zwei horizontalen Testliniensegmenten; und

d) Einstellen des Betriebs der ersten und der zweiten Druckkopfkassette (C1, C2) ent-

lang der Medienabtastachse durch das Aktivieren ausgewählter Düsen und durch das Einstellen der Position der ersten Druckkopfkassette (C1) relativ zu der zweiten Druckkopfkassette (C2) auf der Basis des gemessenen vertikalen Abstands zwischen den zwei horizontalen Testliniensegmenten, derart, daß die aktivierten Düsen der ersten Kassette (C1) und die aktivierten Düsen der zweiten Kassette (C2) entlang der Medienabtastachse nicht überlappen, und derart, daß die aktivierte Düse der ersten Kassette (C1) und die aktivierte Düse der zweiten Kassette (C2), die sich entlang der Medienabtastachse am nächsten sind, entlang der Medienabtastachse um im wesentlichen einen Düsenabstand (P) voneinander beabstandet sind.

2. Ein Verfahren gemäß Anspruch 1, das ferner folgende Schritte aufweist:

e) Bewirken, daß die zweite Druckkopfkassette (C2) mit einer ausgewählten Düse derselben ein drittes horizontales Testliniensegment druckt, das sich entlang der Wagenabtastachse streckt, wobei das dritte Liniensegment nicht mit dem ersten und dem zweiten horizontalen Testliniensegment überlappt;

f) Bestimmen einer vertikalen Position des dritten vertikalen Testliniensegments entlang der Medienabtastachse mit dem optischen Sensor (65);

g) Bestimmen eines gemessenen vertikalen Abstands entlang der Medienabtastachse zwischen dem zweiten und dem dritten horizontalen Testliniensegment;

h) Berechnen eines Medienweiterbewegungsvorrichtung-Kompensationsfaktors durch Teilen (a) eines nominellen Abstands zwischen den ausgewählten Düsen der zweiten Druckkopfkassette (C2) durch (b) den gemessenen vertikalen Abstand zwischen dem zweiten und dem dritten Testliniensegment; und

i) Multiplizieren des gemessenen vertikalen Abstands zwischen dem ersten und dem zweiten Testliniensegment mit dem Medienweiterleitungsvorrichtung-Kompensationsfaktor, um einen Kassettenposition-Korrekturfaktor zu schaffen; und

wobei der Schritt (d) ferner den Schritt des Aktivierens ausgewählter Düsen, die die Position der ersten und der zweiten Druckkopfkassette (C1, C2) relativ zueinander auf der Basis des Positionskorrekturfaktors einstellen, aufweist, derart, daß die aktivierte Düse der ersten Kassette (C1) und die aktivierte Düse der zweiten Kassette (C2), die sich entlang der Medienabtastachse am nächsten sind, entlang der Medienabtastachse um im wesentlichen einen Düsenabstand (P) voneinander beabstandet sind.

3. Ein Verfahren gemäß Anspruch 1 oder 2, bei dem die Position der ersten Kassette (C1) bezüglich der Position der zweiten Kassette (C2) eingestellt wird, indem die erste Kassette (C1) um eine Achse, die parallel zu der Wagenabtastachse ist, gedreht wird, wodurch die Düsen der ersten Kassette (C1) relativ zu den Düsen der zweiten Druckkopfkassette (C2) entlang der Medienabtastachse bewegt werden.

4. Ein Verfahren gemäß Anspruch 1, bei dem im Schritt (d) ausgewählte Düsen jeder Druckkopfkassette auf der Basis des gemessenen vertikalen Abstands aktiviert werden, derart, daß die aktivierten Düsen der Druckkopfkassetten (C1, C2) entlang der Medienachse nicht überlappen; und bei dem die relativen Positionen der Kassetten (C1, C2) auf der Basis des gemessenen vertikalen Abstands eingestellt werden, derart, daß die aktivierte Düse der ersten Kassette (C1) und die aktivierte Düse der zweiten Kassette (C2), die sich entlang der Medienabtastachse am nächsten sind, entlang der Medienabtastachse um im wesentlichen einen Düsenabstand (P) voneinander beabstandet sind.

5. Ein Verfahren gemäß Anspruch 2, bei dem im Schritt (d) ausgewählte Düsen jeder Druckkopfkassette (C1, C2) auf der Basis des Kassettenposition-Korrekturfaktors aktiviert werden, derart, daß die aktivierten Düsen der Druckkopfkassetten entlang der Medienabtastachse nicht überlappen; und bei dem die relativen Positionen der Kassetten (C1, C2) derart eingestellt werden, daß die aktivierte Düse der ersten Kassette (C1) und die aktivierte Düse der zweiten Kassette (C2), die sich entlang der Medienabtastachse am nächsten sind, entlang der Medienabtastachse um im wesentlichen einen Düsenabstand (P) beabstandet sind.

6. Ein Verfahren gemäß Anspruch 4 oder 5, bei dem die ausgewählten Düsen derart aktiviert werden, daß die ausgewählte Düse der ersten und der zweiten Kassette (C1, C2), die sich entlang der Medienabtastachse am nächsten sind, entlang der Medienabtastachse um mehr als einen Düsenabstand (P) voneinander beabstandet sind, und bei dem danach die relativen Positionen der Kassetten auf die Beabstandung von einem Düsenabstand eingestellt wer-

den.

7. Ein Verfahren gemäß Anspruch 4 oder 5, bei dem die relativen Positionen der ersten und der zweiten Kassette (C1, C2) durch das Drehen der ersten Druckkopfkassette (C1) um eine Achse, die parallel zu der Wagenabtastachse ist, eingestellt werden, wodurch die Düsen der ersten Kassette (C1) entlang der Medienabtastachse näher zu den Düsen der zweiten Kassette (C2) bewegt werden.

8. Ein Verfahren gemäß einem beliebigen vorhergehenden Anspruch, bei dem der Schritt (b) folgende Schritte einschließt:

b1) Bewegen des Druckkopfmediums (61) zu einem vorbestimmten vertikalen Startort, derart, daß der Sensor (65) entlang der Medienabtastachse von allen horizontalen Testliniensegmenten verschoben ist;

b2) Horizontales Bewegen des Wagens (51), um den optischen Sensor (65) horizontal mit einem nominellen Mittelpunkt eines ausgewählten der horizontalen Testliniensegmente auszurichten;

b3) Inkrementales Bewegen des Druckmediums (61) um einen vorbestimmten Betrag, derart, daß das ausgewählte horizontale Testliniensegment inkremental entlang der Medienabtastachse und durch den aktiven Bereich des optischen Sensors (65), der stationär bleibt, abgetastet wird, und derart, daß der optische Sensor (65) an einer Reihe von Orten positioniert wird, die die gleiche Position entlang der Wagenabtastachse aufweisen;

b4) Lesen der Ausgabe des optischen Sensors für jeden der Reihe von Orten, an denen der optische Sensor (65) positioniert ist, um eine Reihe von Positionsabtastwerten für die abgetasteten horizontalen Testliniensegmente zu erzeugen;

b5) Bestimmen einer vertikalen Position des abgetasteten horizontalen Testliniensegments aus der Reihe von Positionsabtastwerten; und

b) Durchführen der Schritte (b2) bis (b5) für jedes verbleibende horizontale Testliniensegment.

Revendications

1. Procédé d'alignement du fonctionnement de cassettes de têtes d'impression à jet d'encre (C1, C2) le long d'un axe de balayage de support dans une imprimante à passes comportant (i) un chariot (51) mobile le long d'un axe de balayage de chariot horizontal suivant des première et seconde directions de balayage de chariot, (ii) des première et seconde cassettes de têtes d'impression à jet d'encre (C1, C2) supportées par le chariot mobile (51) pour une impression sur un support d'impression (61) qui est mobile sélectivement le long d'un axe de balayage de support vertical, chaque cassette de têtes d'impression (C1, C2) comportant une pluralité de busettes de jet d'encre (101, 102) agencées le long de l'axe de support de telle sorte que les busettes (101, 102) de chaque cassette (C1, C2) soient espacées le long de l'axe du support, les cassettes (C1, C2) étant positionnées côte-à-côte le long de l'axe de balayage de chariot et étant décalées le long de l'axe de balayage de support de telle sorte que les busettes de jet d'encre (101, 102) des première et seconde cassettes de têtes d'impression (C1, C2) puissent se chevaucher le long de l'axe du support; et (iii) un capteur optique (65) supporté par le chariot mobile (51) pour former une image d'une ligne horizontale et pour produire une sortie indicative d'une position verticale de ladite ligne dans une plage de fonctionnement verticale du capteur optique (65), le procédé comprenant les étapes de :

(a) action consistant à forcer les première et seconde cassettes de têtes d'impression (C1, C2) à imprimer deux segments de ligne de test horizontale en non chevauchement (HL) qui s'étendent le long de l'axe de balayage du chariot, un segment de ligne de test horizontale étant imprimé à l'aide d'une busette sélectionnée de la première cassette de têtes d'impression (C1) et l'autre segment de ligne de test horizontale étant imprimé à l'aide d'une busette sélectionnée de la seconde cassette de têtes d'impression (C2);

(b) détermination, à l'aide du capteur optique (65), des positions verticales respectives des segments de ligne de test horizontale (HL) le long de l'axe de balayage du support ;

(c) détermination d'une distance verticale mesurée suivant l'axe de balayage de support entre les deux segments de ligne de test horizontale ; et

(d) réglage du fonctionnement des première et seconde cassettes de têtes d'impression (C1, C2) le long de l'axe du support en validant des busettes sélectionnées et en réglant la position de la première cassette de têtes d'impression (C1) par rapport à la seconde cassette de têtes d'impression (C2) sur la base de la distance verticale mesurée entre les deux segments de ligne

de test horizontale de telle sorte que les busettes validées de la première cassette (C1) et que les busettes validées de la seconde cassette (C2) ne se chevauchent pas suivant l'axe de balayage du support et de telle sorte que la busette validée de la première cassette (C1) et la busette validée de la seconde cassette (C2) qui sont les plus proches suivant l'axe de balayage du support soient espacées le long de l'axe de balayage du support de sensiblement un pas de busette (P).

2. Procédé selon la revendication 1, incluant en outre les étapes de :

(e) action consistant à forcer la seconde cassette de têtes d'impression (C2) à imprimer à l'aide de sa busette sélectionnée un troisième segment de ligne de test horizontale qui s'étend le long de l'axe de balayage de chariot, dans lequel le troisième segment de ligne est en non chevauchement avec les premier et second segments de ligne de test horizontale ;

(f) détermination à l'aide du capteur optique (65), d'une position verticale du troisième segment de ligne de test horizontale suivant l'axe de balayage du support;

(g) détermination d'une distance verticale mesurée suivant l'axe de balayage du support entre les second et troisième segments de ligne de test horizontale ; et

(h) calcul d'un facteur de compensation de mécanisme d'avancement de support en divisant (a) une distance nominale entre les busettes sélectionnées de la seconde cassette de têtes d'impression (C2) par (b) la distance verticale mesurée entre les second et troisième segments de ligne de [est horizontale ; et

(i) multiplication de la distance verticale mesurée entre les premier et second segments de ligne de test par le facteur de compensation de mécanisme d'avancement de support pour produire un facteur de correction de position de cassette ;

et dans lequel l'étape (d) inclut également l'étape de validation de busettes sélectionnées en réglant la position des première et seconde cassettes de têtes d'impression (C1, C2) l'une par rapport à l'autre sur la base du facteur de correction de position de telle sorte que la busette validée de la première cassette (C1) et que la busette validée de la seconde cassette (C2) qui sont les plus proches suivant l'axe de balayage du support soient espacées le long de l'axe de balayage du support de sensiblement un pas de busette (P).

3. Procédé selon la revendication 1 ou 2, dans lequel la position de la première cassette (C1) est réglée par rapport à la position de la seconde cassette (C2) en faisant tourner la première cassette (C1) autour d'un axe parallèle à l'axe de balayage de cassette de telle sorte que les busettes de la première cassette (C1) soient déplacées par rapport aux busettes de la seconde cassette de têtes d'impression (C2) suivant l'axe de balayage du support.

4. Procédé selon la revendication 1 dans lequel, lors de l'étape (d), des busettes sélectionnées de chaque cassette de têtes d'impression sont validées sur la base de ladite distance verticale mesurée de telle sorte que les busettes validées des cassettes de têtes d'impression (C1, C2) ne se chevauchent pas le long de l'axe du support; et les positions relatives des cassettes (C1, C2) sont réglées sur la base de ladite distance verticale mesurée de telle sorte que la busette validée de la première cassette (C1) et la busette validée de la seconde cassette (C2) qui sont les plus proches suivant l'axe de balayage du support soient espacées de sensiblement un pas de busette (P) le long de l'axe de balayage du support.

5. Procédé selon la revendication 2, dans lequel, lors de l'étape (d), des busettes sélectionnées de chaque cassette d'impression (C1, C2) sont validées sur la base du facteur de correction de position de cassette de telle sorte que lesdites busettes validées des cassettes d'impression ne se chevauchent pas le long de l'axe de balayage du support; et les positions relatives des cassettes (C1, C2) sont réglées de telle sorte que la busette validée de la première cassette (C1) et la busette validée de la seconde cassette (C2) qui sont les plus proches suivant l'axe de balayage du support soient espacées de sensiblement un pas de busette (P) suivant l'axe de balayage du support.

6. Procédé selon la revendication 4 ou 5, dans lequel les busettes sélectionnées sont validées de telle sorte que les busettes validées des première et seconde cassettes (C1, C2) qui sont les plus proches suivant l'axe de balayage du support soient espacées de plus d'un pas de busette (P) le long de l'axe de balayage du support et qu'ensuite, les positions relatives des cassettes soient réglées par rapport audit espacement d'un pas de busette.

7. Procédé selon la revendication 4 ou 5, dans lequel les positions relatives des première et seconde cassettes (C1, C2) sont réglées en faisant tourner la première cassette de têtes d'impression (C1) autour d'un axe parallèle à l'axe de balayage du chariot de telle sorte que les busettes de la première cassette (C1) soient rapprochées des busettes de la seconde cassette (C2) le long de l'axe de balayage du support.

8. Procédé selon l'une quelconque des revendications précédentes, dans lequel l'étape (b) inclut :

(b1) le déplacement du support d'impression (61) jusqu'à un emplacement de début vertical prédéterminé de telle sorte que le capteur (65) soit déplacé le long de l'axe de balayage du support par rapport à tous les segments de ligne de test horizontale ;

(b2) le déplacement horizontal du chariot (51) pour aligner le capteur optique (65) horizontalement avec un centre nominal de l'un sélectionné des segments de ligne de test horizontale ;

(b3) le déplacement par incréments du support d'impression (61) d'une valeur prédéterminée de telle sorte que le segment de ligne de test horizontale sélectionné soit balayé par incréments le long de l'axe de balayage du support et au travers de la zone active du capteur optique (65) qui reste stationnaire et de telle sorte que le capteur optique (65) soit positionné au niveau d'une série d'emplacements présentant la même position le long de l'axe de balayage du chariot ;

(b4) la lecture de la sortie du capteur optique pour chacun de la série d'emplacements pour lesquels le capteur optique (65) est positionné pour produire une série d'échantillons de position pour les segments de ligne de test horizontale balayés ;

(b5) la détermination d'une position verticale du segment de ligne de test horizontale balayé à partir de la série d'échantillons de position ; et

(b6) la réalisation des étapes (b2) à (b5) pour chaque segment de ligne de test horizontale restant.

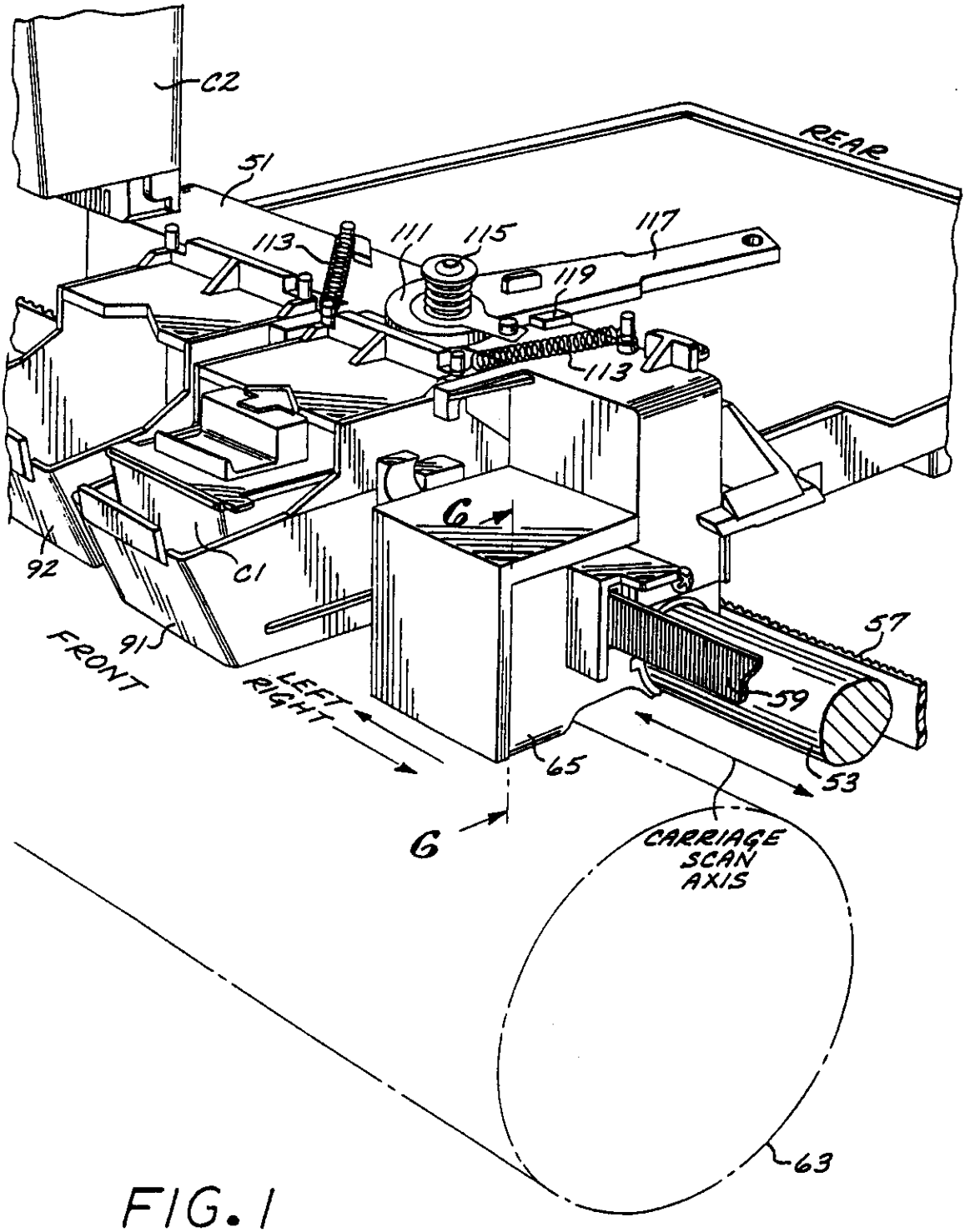
C2
51
REAR
113
111
115
117
119
113
6
92
C1
91
FRONT
LEFT
RIGHT
57
59
65
53
6
CARRIAGE
SCAN
AXIS
63

FIG. 1

FIG. 3

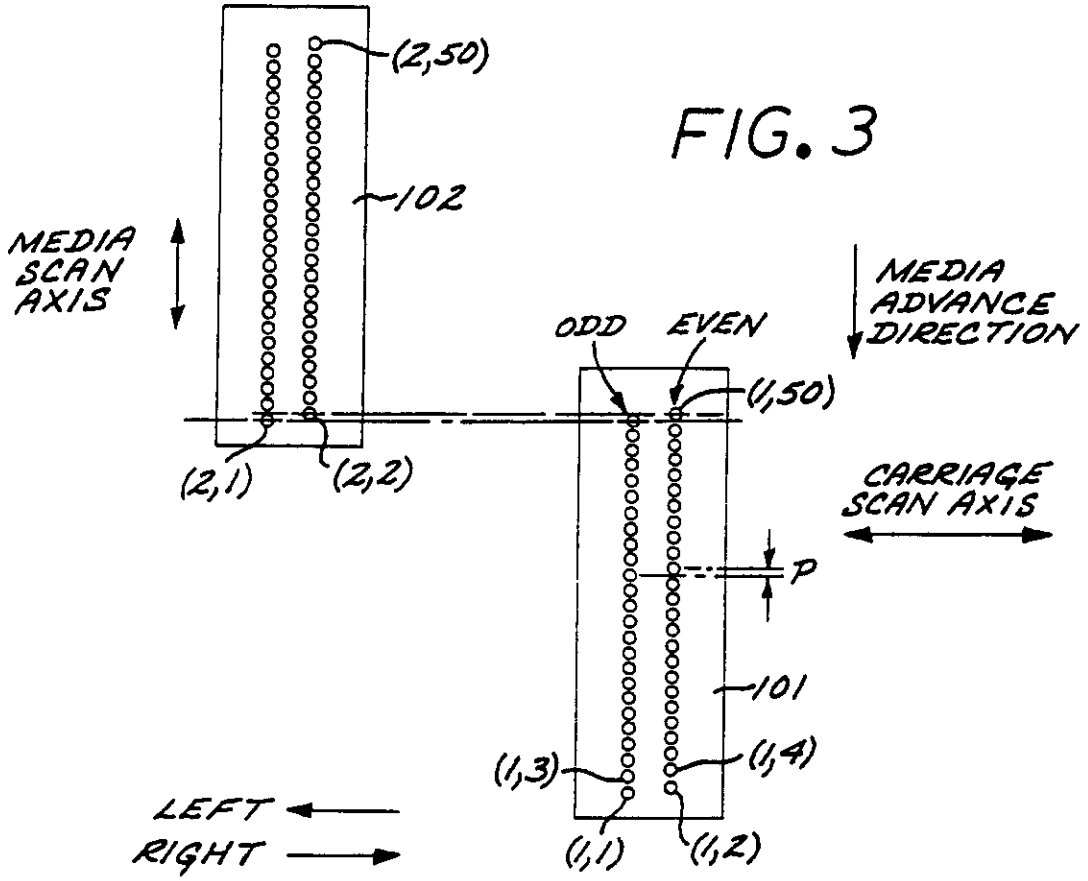
(2,50)
102
MEDIA SCAN AXIS
MEDIA ADVANCE DIRECTION
ODD
EVEN
(1,50)
(2,1)
(2,2)
CARRIAGE SCAN AXIS
P
101
(1,3)
(1,4)
LEFT
RIGHT
(1,1)
(1,2)

FIG. 2

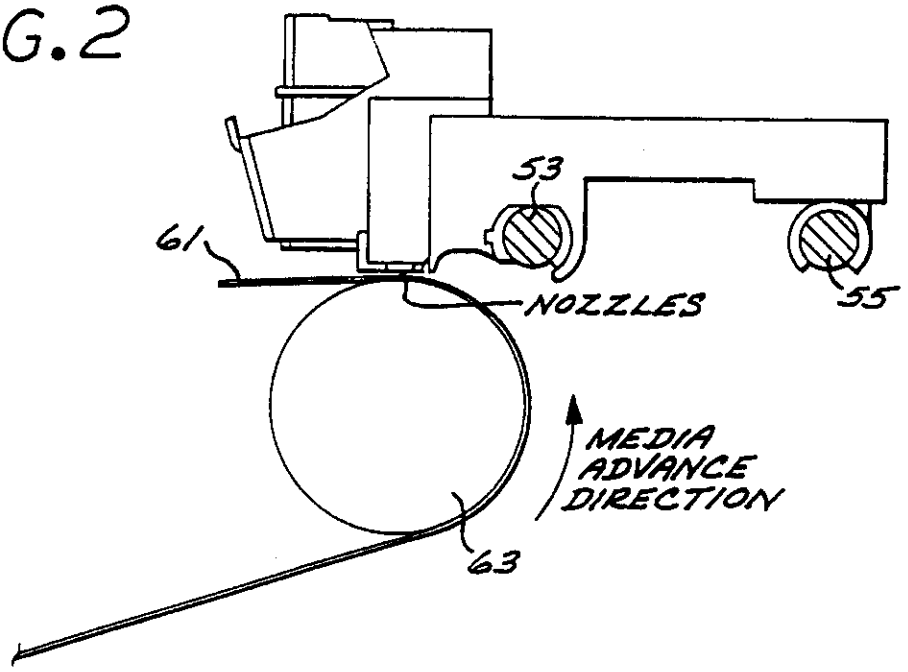
53
61
NOZZLES
55
MEDIA ADVANCE DIRECTION
63

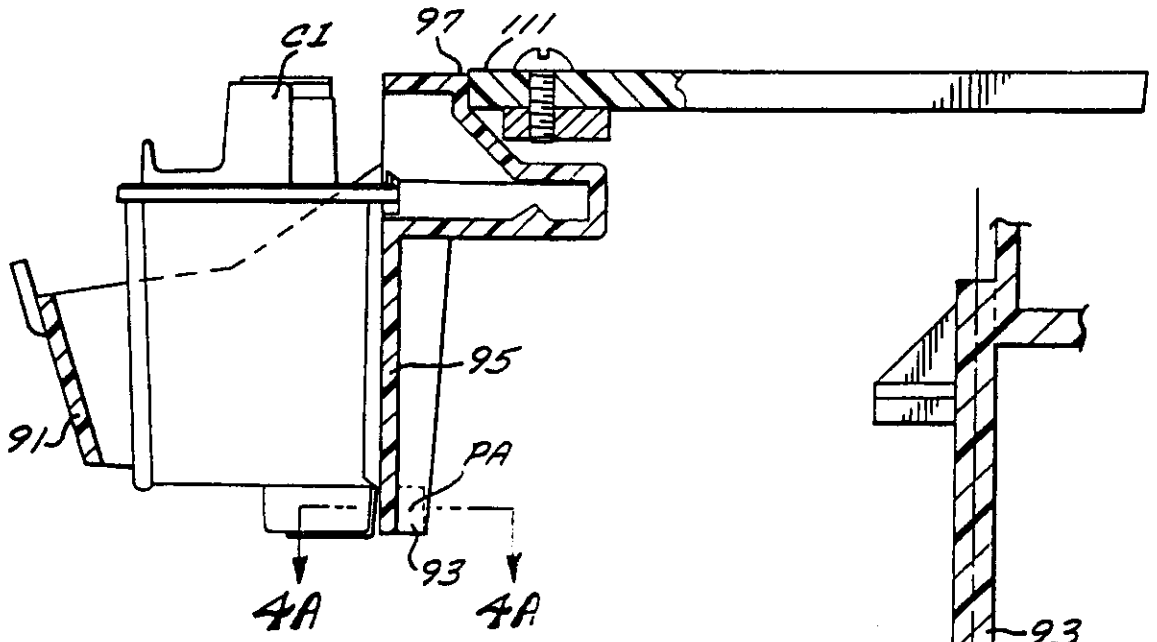

FIG.4

FIG.4A

FIG.5

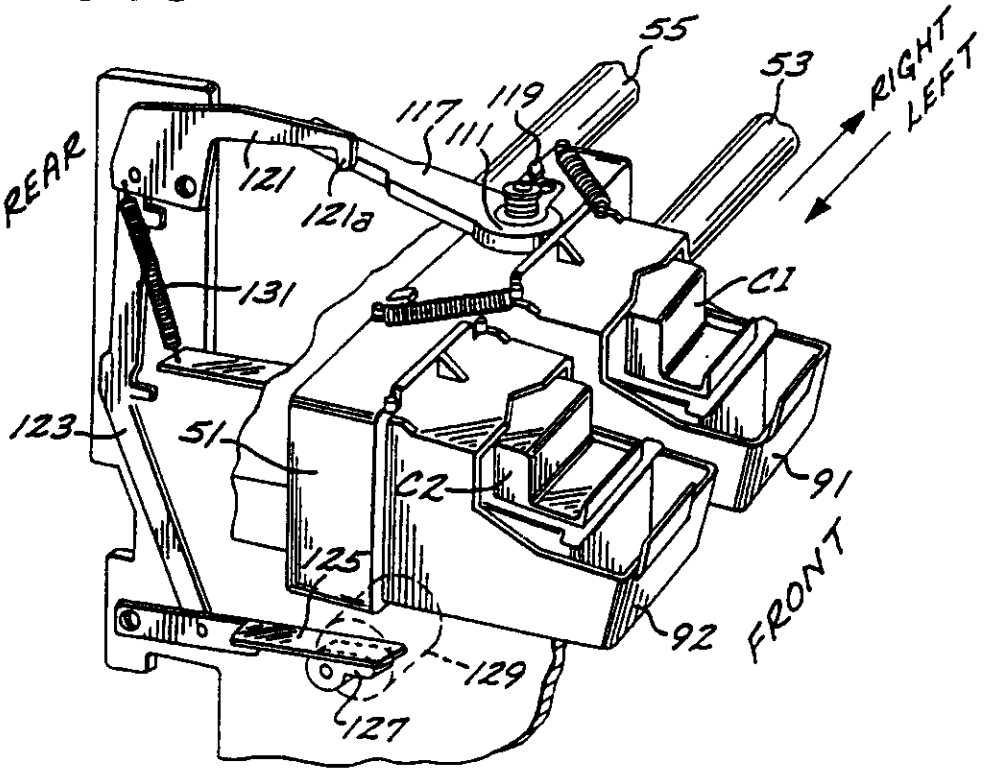

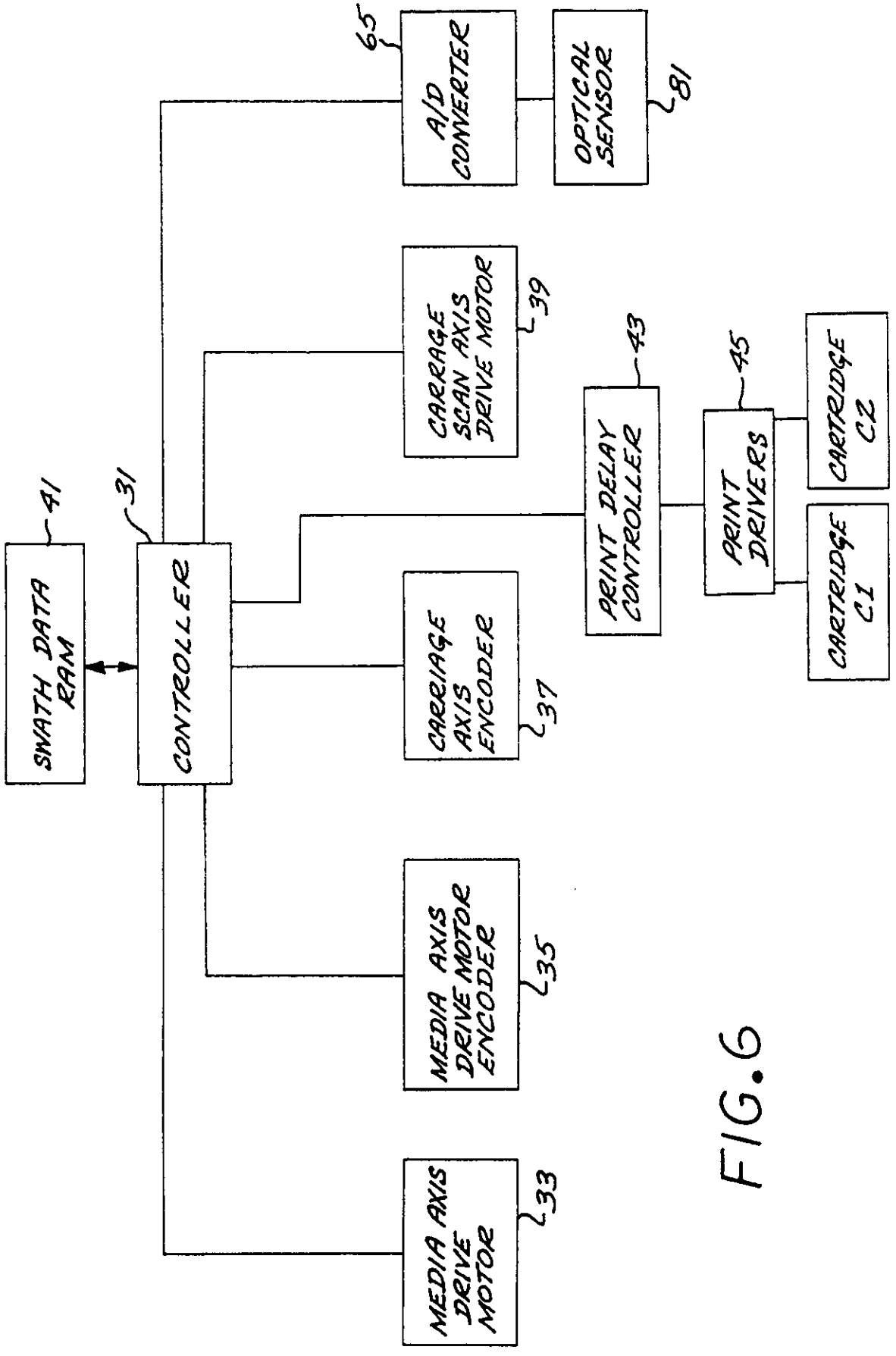
SWATH DATA RAM
41
CONTROLLER
31
A/D CONVERTER
65
OPTICAL SENSOR
81
CARRIAGE SCAN AXIS DRIVE MOTOR
39
CARRIAGE AXIS ENCODER
37
MEDIA AXIS DRIVE MOTOR ENCODER
35
MEDIA AXIS DRIVE MOTOR
33
PRINT DELAY CONTROLLER
43
PRINT DRIVERS
45
CARTRIDGE C2
CARTRIDGE C1

FIG.6

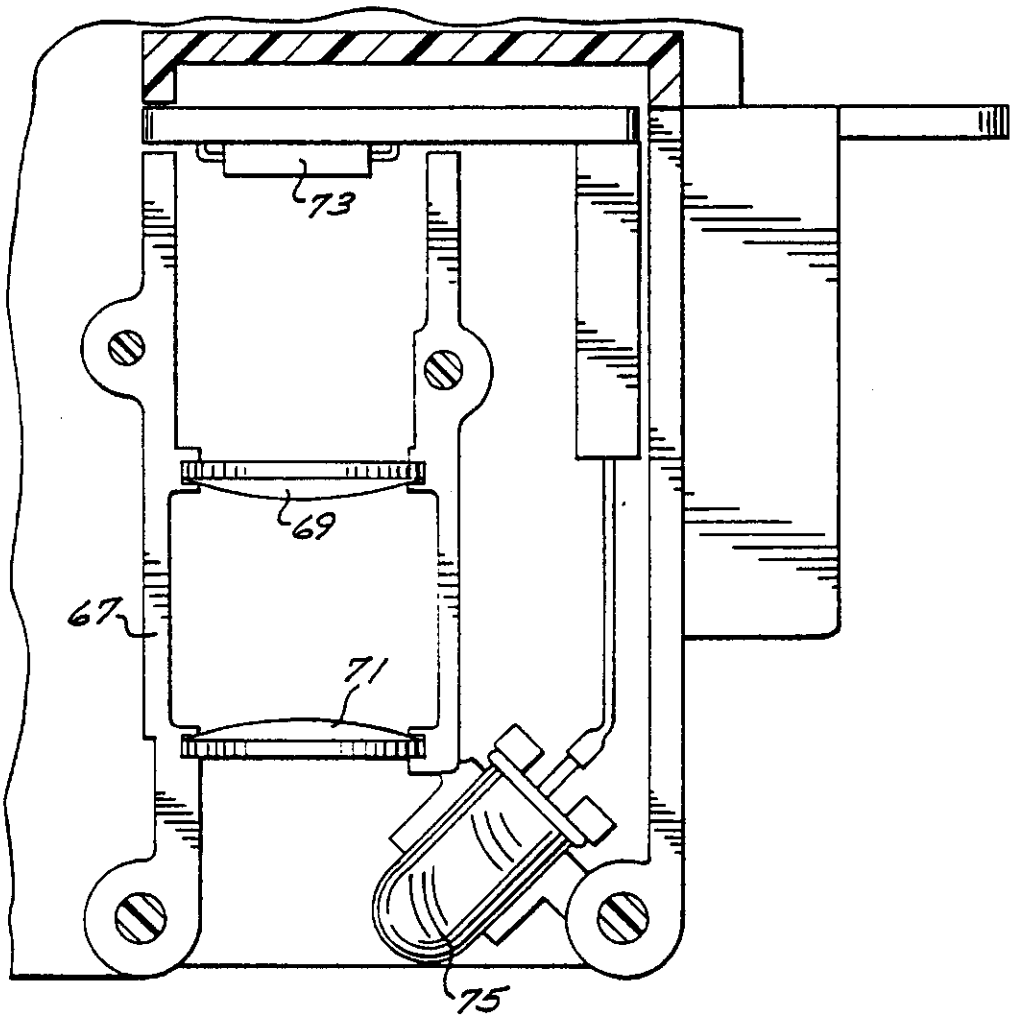

FIG. 7

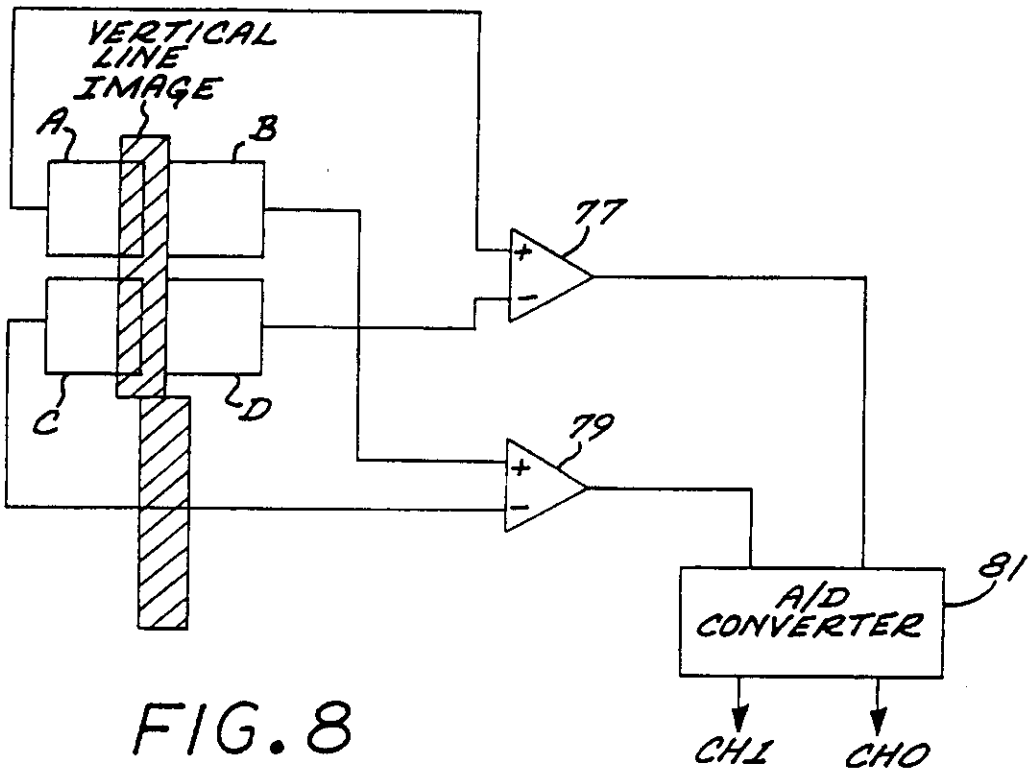
VERTICAL LINE IMAGE
A
B
C
D
77
79
81
A/D CONVERTER
CHI
CHO

FIG. 8

FIG. 9

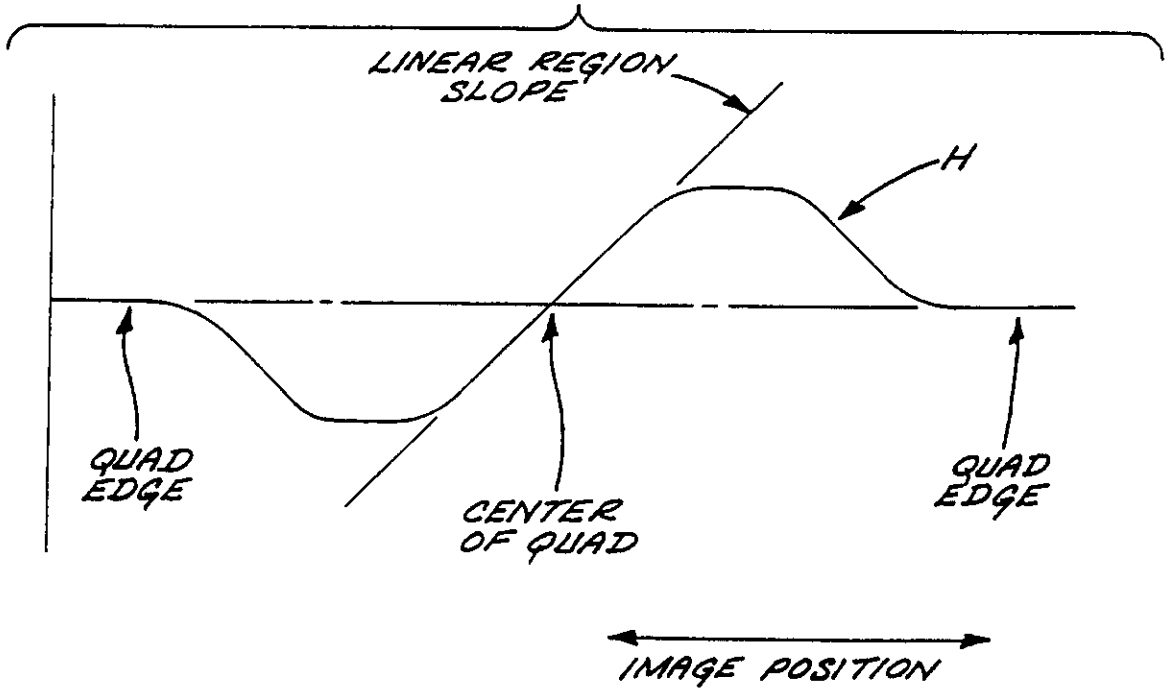
LINEAR REGION SLOPE
H
QUAD EDGE
CENTER OF QUAD
QUAD EDGE
IMAGE POSITION

FIG.10

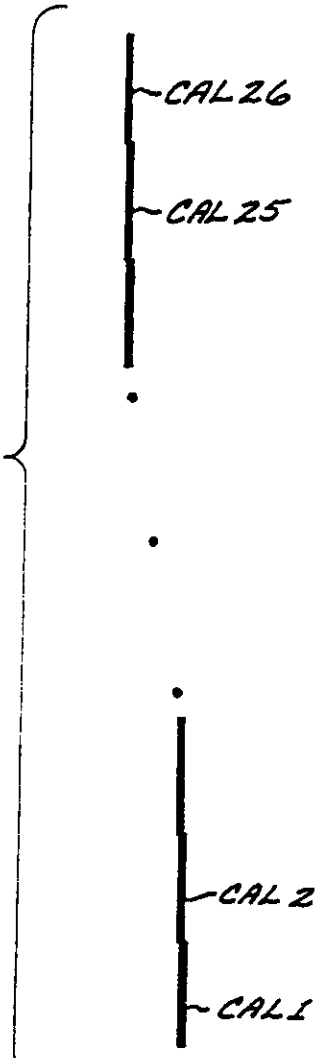
CAL 26
CAL 25
CAL 2
CAL 1

FIG.11

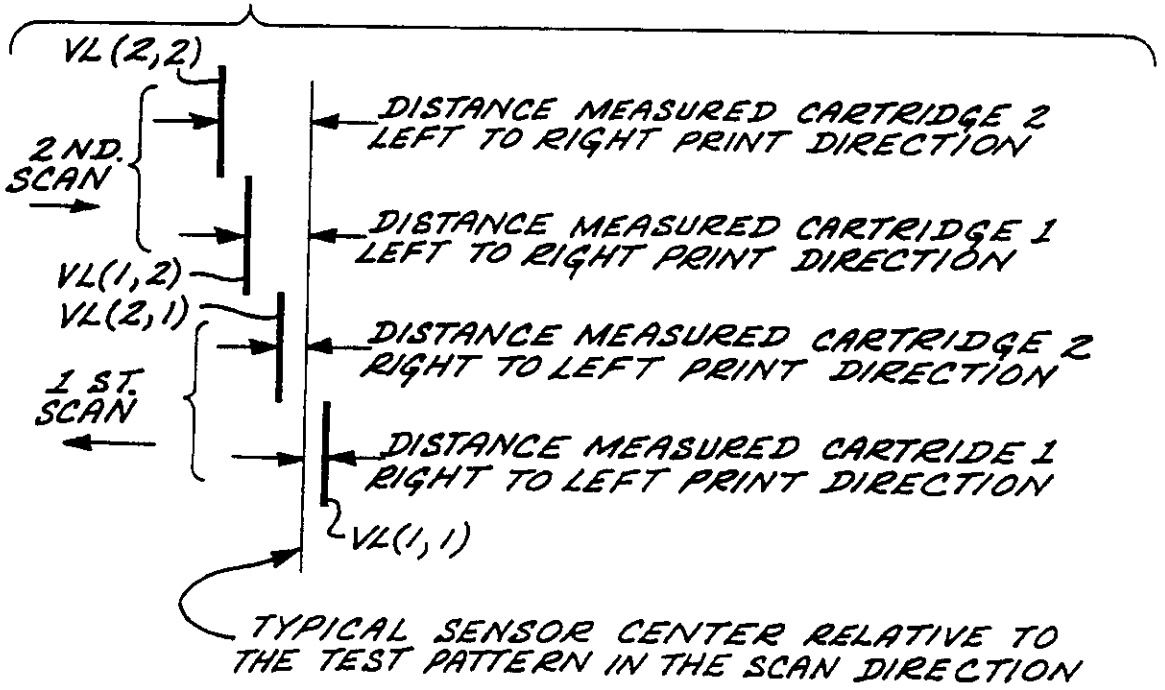
VL(2,2)
2 ND. SCAN
VL(1,2)
VL(2,1)
1 ST. SCAN
VL(1,1)
DISTANCE MEASURED CARTRIDGE 2 LEFT TO RIGHT PRINT DIRECTION
DISTANCE MEASURED CARTRIDGE 1 LEFT TO RIGHT PRINT DIRECTION
DISTANCE MEASURED CARTRIDGE 2 RIGHT TO LEFT PRINT DIRECTION
DISTANCE MEASURED CARTRIDE 1 RIGHT TO LEFT PRINT DIRECTION
TYPICAL SENSOR CENTER RELATIVE TO THE TEST PATTERN IN THE SCAN DIRECTION

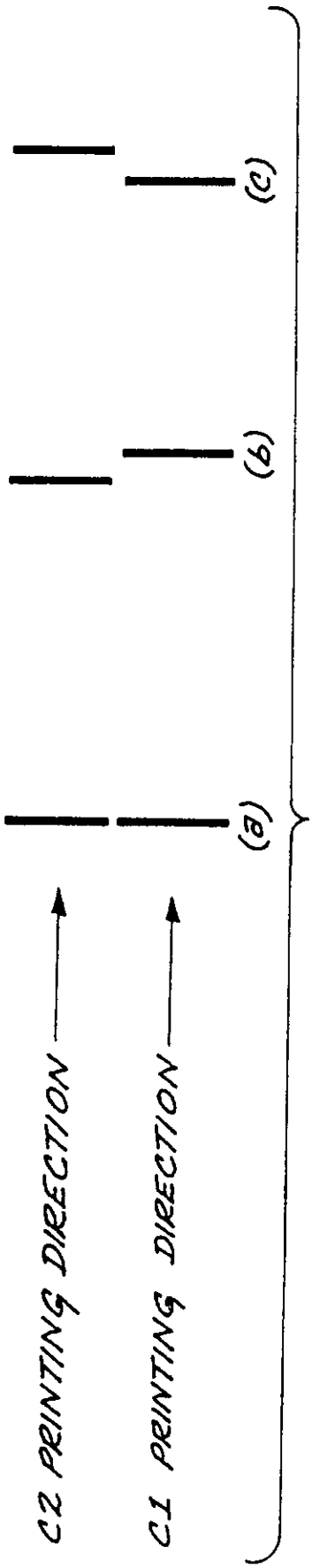
C2 PRINTING DIRECTION
C1 PRINTING DIRECTION
(a)
(b)
(c)

FIG. 12

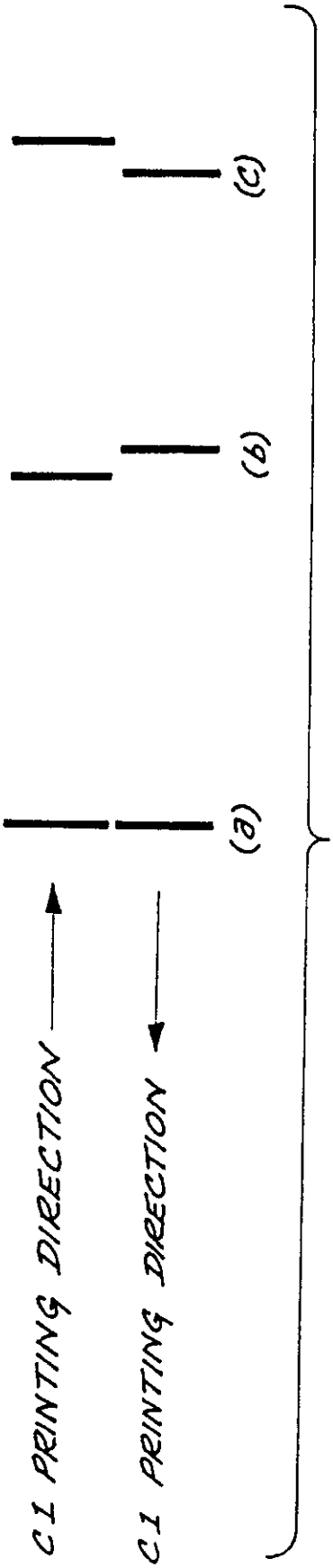
C1 PRINTING DIRECTION
C1 PRINTING DIRECTION
(a)
(b)
(c)

FIG. 13

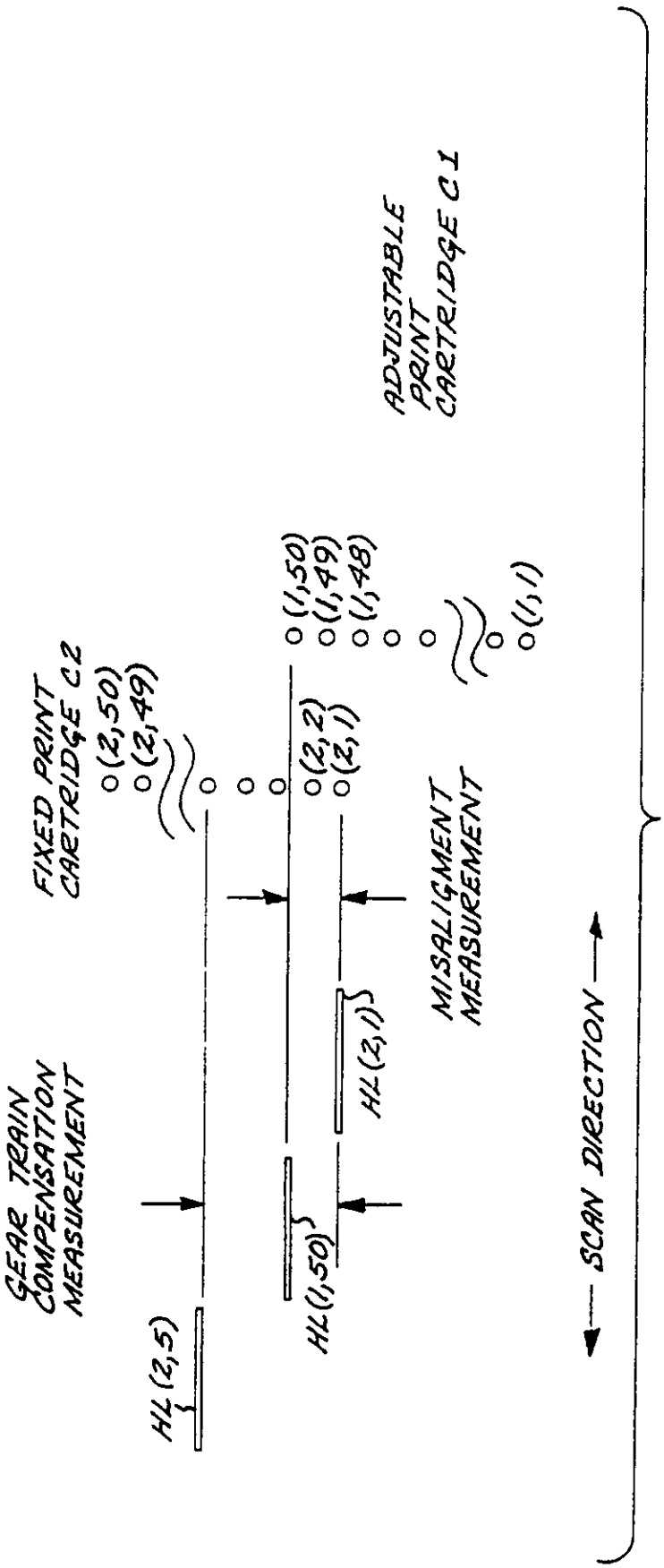
GEAR TRAIN COMPENSATION MEASUREMENT
FIXED PRINT CARTRIDGE C2
ADJUSTABLE PRINT CARTRIDGE C1
MISALIGNMENT MEASUREMENT
HL(2,5)
HL(1,50)
HL(2,1)
(2,50)
(2,49)
(2,2)
(2,1)
(1,50)
(1,49)
(1,48)
(1,1)
SCAN DIRECTION

FIG. 14

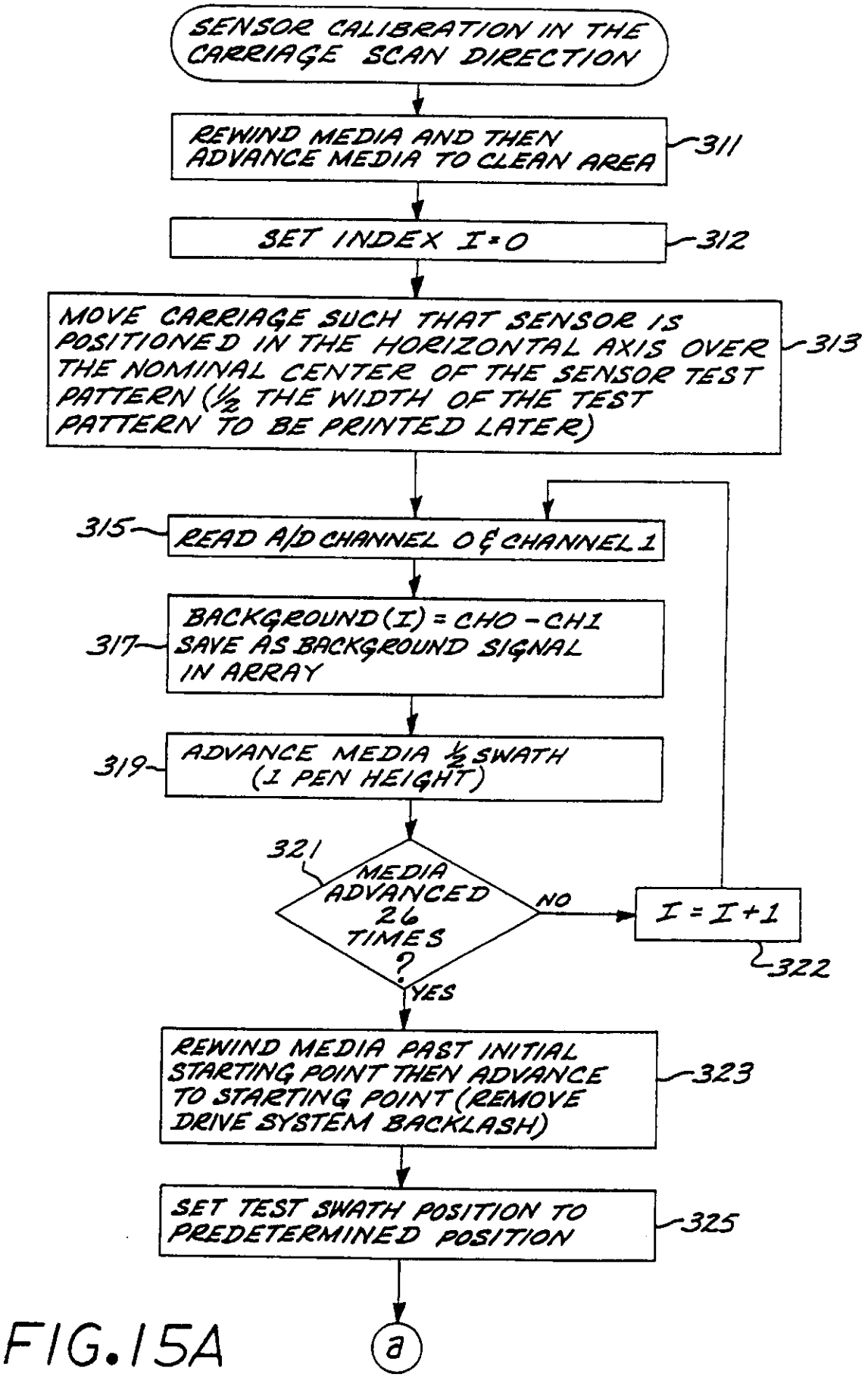
SENSOR CALIBRATION IN THE CARRIAGE SCAN DIRECTION
REWIND MEDIA AND THEN ADVANCE MEDIA TO CLEAN AREA
311
SET INDEX I=0
312
MOVE CARRIAGE SUCH THAT SENSOR IS POSITIONED IN THE HORIZONTAL AXIS OVER THE NOMINAL CENTER OF THE SENSOR TEST PATTERN (½ THE WIDTH OF THE TEST PATTERN TO BE PRINTED LATER)
313
315
READ A/D CHANNEL 0 & CHANNEL 1
317
BACKGROUND(I) = CH0 - CH1 SAVE AS BACKGROUND SIGNAL IN ARRAY
319
ADVANCE MEDIA ½ SWATH (1 PEN HEIGHT)
321
MEDIA ADVANCED 26 TIMES ?
NO
I = I + 1
322
YES
REWIND MEDIA PAST INITIAL STARTING POINT THEN ADVANCE TO STARTING POINT (REMOVE DRIVE SYSTEM BACKLASH)
323
SET TEST SWATH POSITION TO PREDETERMINED POSITION
325
a

FIG.15A

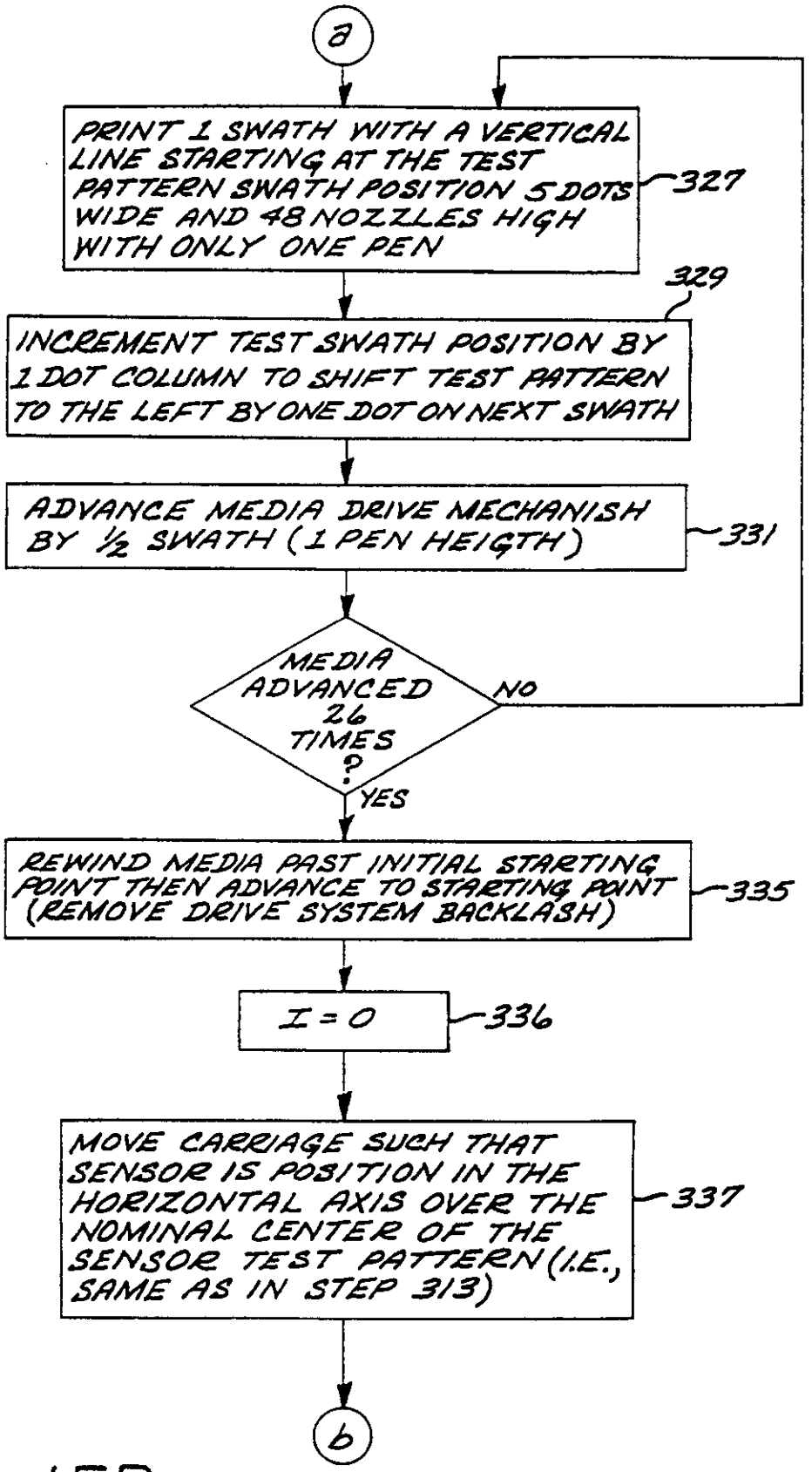
a
PRINT 1 SWATH WITH A VERTICAL LINE STARTING AT THE TEST PATTERN SWATH POSITION 5 DOTS WIDE AND 48 NOZZLES HIGH WITH ONLY ONE PEN
327
329
INCREMENT TEST SWATH POSITION BY 1 DOT COLUMN TO SHIFT TEST PATTERN TO THE LEFT BY ONE DOT ON NEXT SWATH
ADVANCE MEDIA DRIVE MECHANISH BY ½ SWATH (1 PEN HEIGTH)
331
MEDIA ADVANCED 26 TIMES ?
NO
YES
REWIND MEDIA PAST INITIAL STARTING POINT THEN ADVANCE TO STARTING POINT (REMOVE DRIVE SYSTEM BACKLASH)
335
I = 0
336
MOVE CARRIAGE SUCH THAT SENSOR IS POSITION IN THE HORIZONTAL AXIS OVER THE NOMINAL CENTER OF THE SENSOR TEST PATTERN (I.E., SAME AS IN STEP 313)
337
b

FIG. 15B

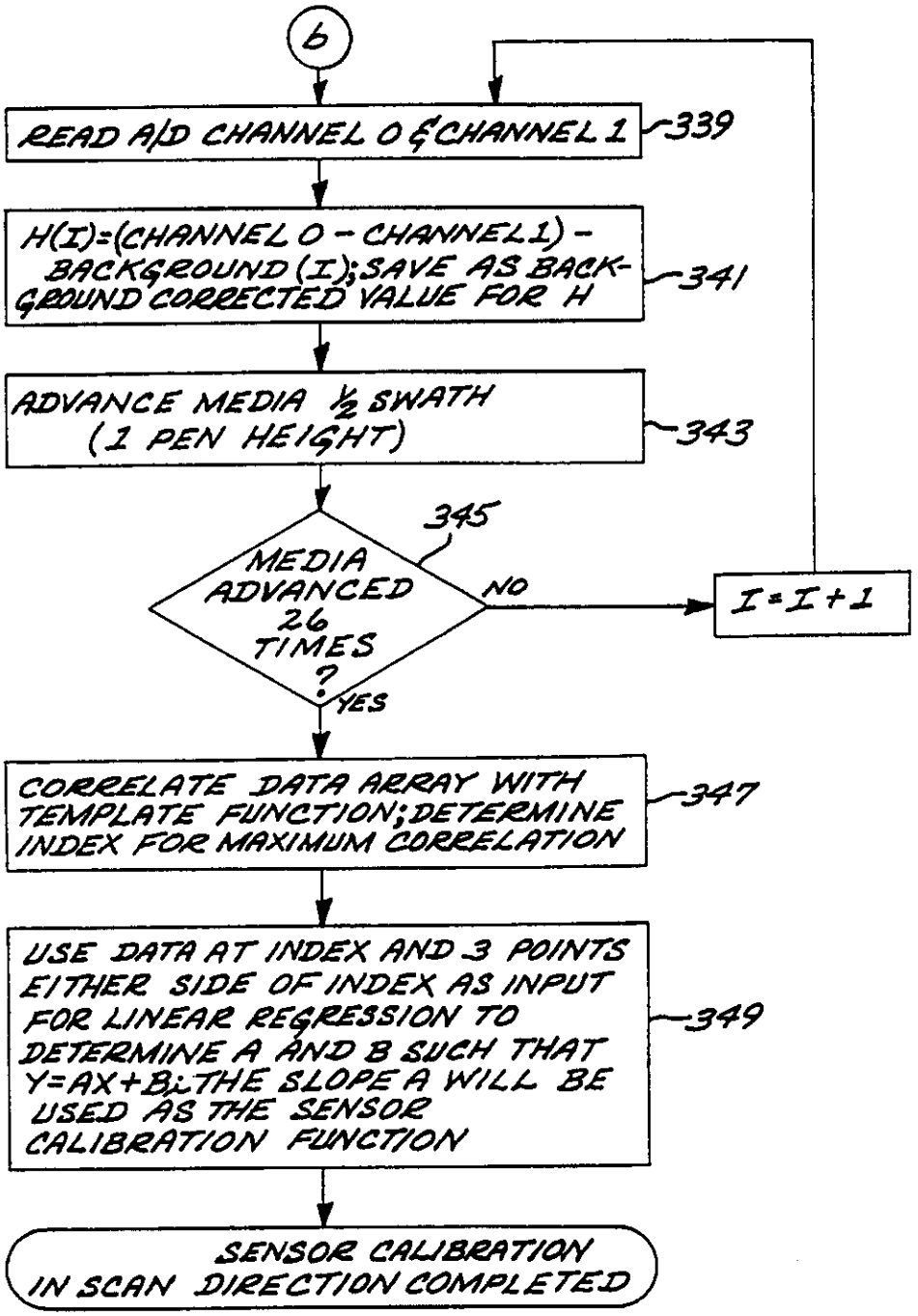
6
READ A/D CHANNEL 0 & CHANNEL 1
339
H(I)=(CHANNEL 0 - CHANNEL 1) - BACKGROUND (I); SAVE AS BACK-GROUND CORRECTED VALUE FOR H
341
ADVANCE MEDIA ½ SWATH (1 PEN HEIGHT)
343
345
MEDIA ADVANCED 26 TIMES ?
NO
I = I + 1
YES
CORRELATE DATA ARRAY WITH TEMPLATE FUNCTION; DETERMINE INDEX FOR MAXIMUM CORRELATION
347
USE DATA AT INDEX AND 3 POINTS EITHER SIDE OF INDEX AS INPUT FOR LINEAR REGRESSION TO DETERMINE A AND B SUCH THAT Y=AX+B; THE SLOPE A WILL BE USED AS THE SENSOR CALIBRATION FUNCTION
349
SENSOR CALIBRATION IN SCAN DIRECTION COMPLETED

FIG. 15C

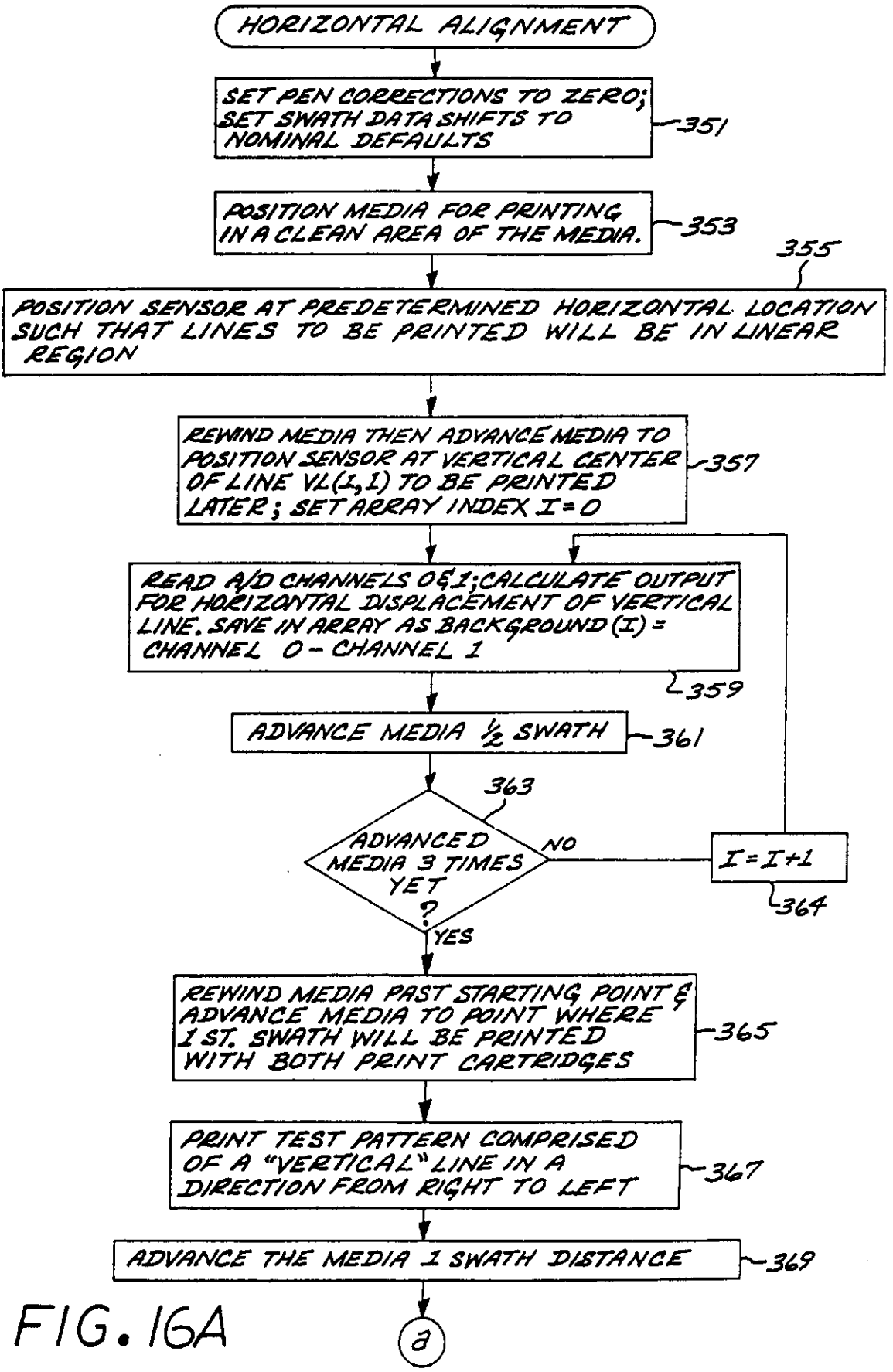
HORIZONTAL ALIGNMENT
SET PEN CORRECTIONS TO ZERO; SET SWATH DATA SHIFTS TO NOMINAL DEFAULTS
351
POSITION MEDIA FOR PRINTING IN A CLEAN AREA OF THE MEDIA.
353
355
POSITION SENSOR AT PREDETERMINED HORIZONTAL LOCATION SUCH THAT LINES TO BE PRINTED WILL BE IN LINEAR REGION
REWIND MEDIA THEN ADVANCE MEDIA TO POSITION SENSOR AT VERTICAL CENTER OF LINE VL(1,1) TO BE PRINTED LATER; SET ARRAY INDEX I=0
357
READ A/D CHANNELS 0&1; CALCULATE OUTPUT FOR HORIZONTAL DISPLACEMENT OF VERTICAL LINE. SAVE IN ARRAY AS BACKGROUND (I) = CHANNEL 0 - CHANNEL 1
359
ADVANCE MEDIA 1/2 SWATH
361
363
ADVANCED MEDIA 3 TIMES YET ?
NO
I=I+1
364
YES
REWIND MEDIA PAST STARTING POINT & ADVANCE MEDIA TO POINT WHERE 1 ST. SWATH WILL BE PRINTED WITH BOTH PRINT CARTRIDGES
365
PRINT TEST PATTERN COMPRISED OF A "VERTICAL" LINE IN A DIRECTION FROM RIGHT TO LEFT
367
ADVANCE THE MEDIA 1 SWATH DISTANCE
369
a

FIG. 16A

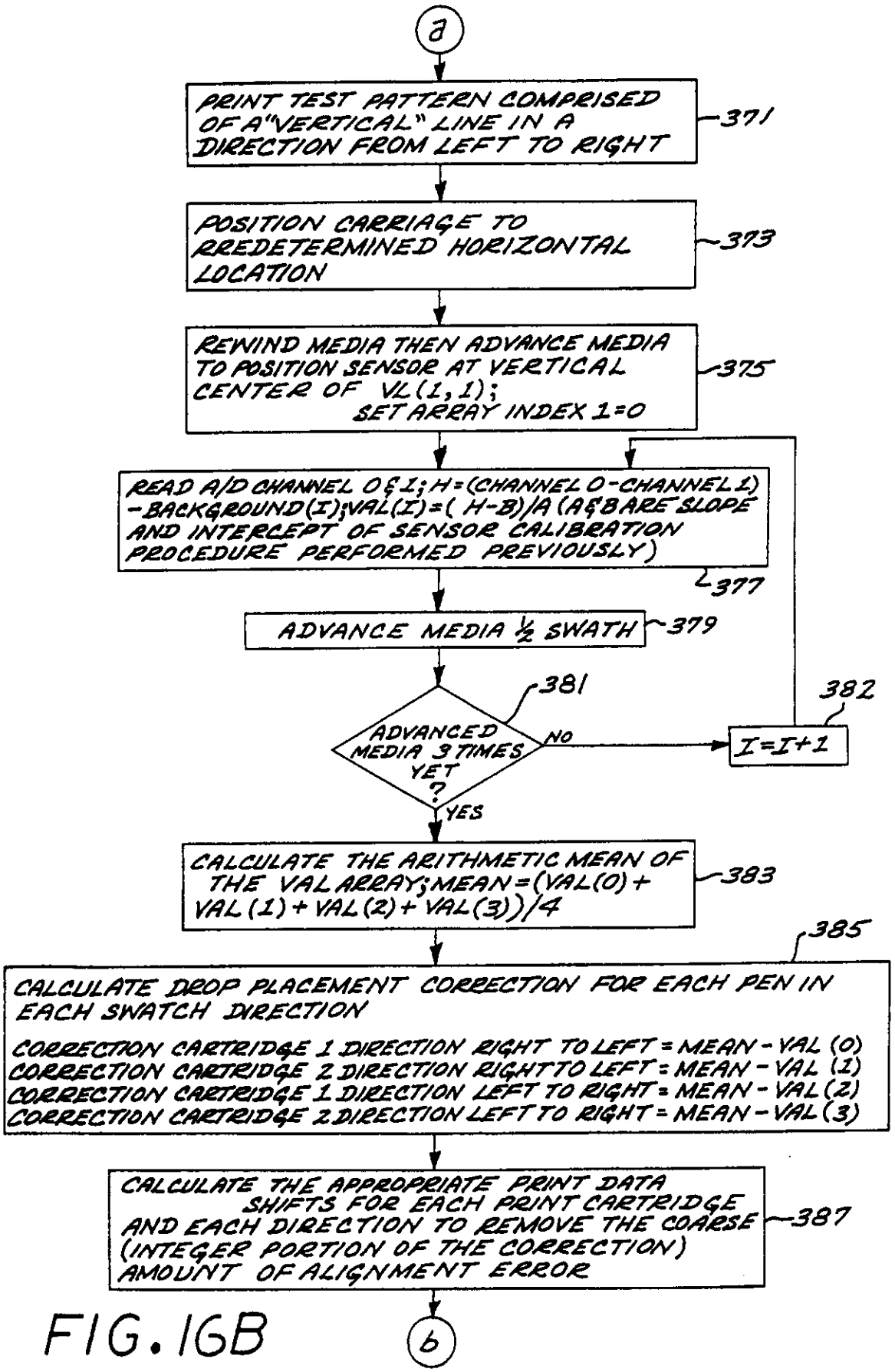
a
PRINT TEST PATTERN COMPRISED OF A "VERTICAL" LINE IN A DIRECTION FROM LEFT TO RIGHT
371
POSITION CARRIAGE TO PREDETERMINED HORIZONTAL LOCATION
373
REWIND MEDIA THEN ADVANCE MEDIA TO POSITION SENSOR AT VERTICAL CENTER OF VL(1,1); SET ARRAY INDEX 1=0
375
READ A/D CHANNEL 0 & 1; H=(CHANNEL 0-CHANNEL 1) -BACKGROUND(I); VAL(I)=(H-B)/A (A & B ARE SLOPE AND INTERCEPT OF SENSOR CALIBRATION PROCEDURE PERFORMED PREVIOUSLY)
377
ADVANCE MEDIA ½ SWATH
379
ADVANCED MEDIA 3 TIMES YET ?
381
NO
I=I+1
382
YES
CALCULATE THE ARITHMETIC MEAN OF THE VAL ARRAY; MEAN=(VAL(0)+VAL(1)+VAL(2)+VAL(3))/4
383
385
CALCULATE DROP PLACEMENT CORRECTION FOR EACH PEN IN EACH SWATCH DIRECTION
CORRECTION CARTRIDGE 1 DIRECTION RIGHT TO LEFT = MEAN - VAL (0)
CORRECTION CARTRIDGE 2 DIRECTION RIGHT TO LEFT = MEAN - VAL (1)
CORRECTION CARTRIDGE 1 DIRECTION LEFT TO RIGHT = MEAN - VAL (2)
CORRECTION CARTRIDGE 2 DIRECTION LEFT TO RIGHT = MEAN - VAL (3)
CALCULATE THE APPROPRIATE PRINT DATA SHIFTS FOR EACH PRINT CARTRIDGE AND EACH DIRECTION TO REMOVE THE COARSE (INTEGER PORTION OF THE CORRECTION) AMOUNT OF ALIGNMENT ERROR
387
b

FIG. 16B

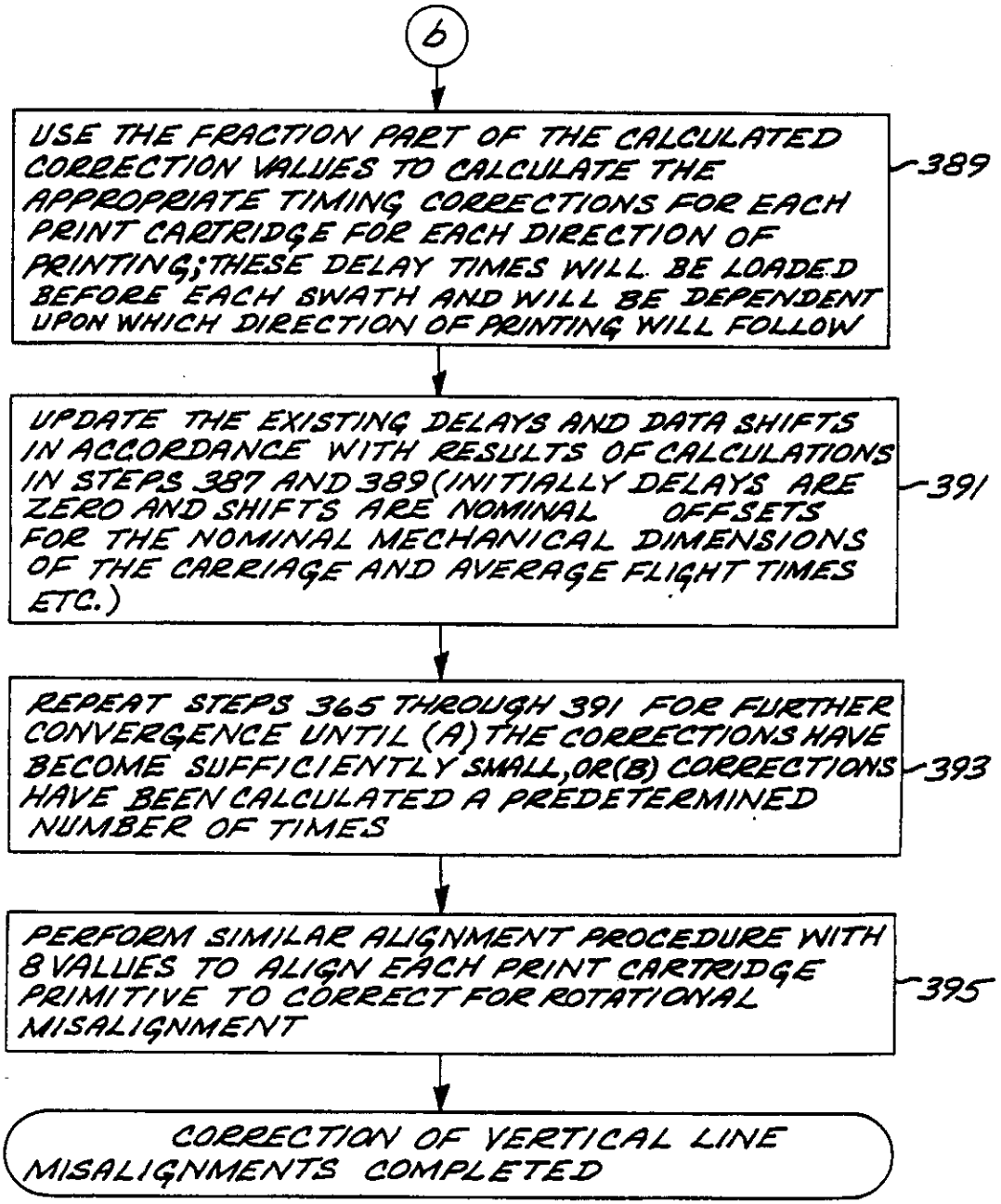
6
USE THE FRACTION PART OF THE CALCULATED CORRECTION VALUES TO CALCULATE THE APPROPRIATE TIMING CORRECTIONS FOR EACH PRINT CARTRIDGE FOR EACH DIRECTION OF PRINTING; THESE DELAY TIMES WILL BE LOADED BEFORE EACH SWATH AND WILL BE DEPENDENT UPON WHICH DIRECTION OF PRINTING WILL FOLLOW
389
UPDATE THE EXISTING DELAYS AND DATA SHIFTS IN ACCORDANCE WITH RESULTS OF CALCULATIONS IN STEPS 387 AND 389 (INITIALLY DELAYS ARE ZERO AND SHIFTS ARE NOMINAL OFFSETS FOR THE NOMINAL MECHANICAL DIMENSIONS OF THE CARRIAGE AND AVERAGE FLIGHT TIMES ETC.)
391
REPEAT STEPS 365 THROUGH 391 FOR FURTHER CONVERGENCE UNTIL (A) THE CORRECTIONS HAVE BECOME SUFFICIENTLY SMALL, OR (B) CORRECTIONS HAVE BEEN CALCULATED A PREDETERMINED NUMBER OF TIMES
393
PERFORM SIMILAR ALIGNMENT PROCEDURE WITH 8 VALUES TO ALIGN EACH PRINT CARTRIDGE PRIMITIVE TO CORRECT FOR ROTATIONAL MISALIGNMENT
395
CORRECTION OF VERTICAL LINE MISALIGNMENTS COMPLETED

FIG. 16C

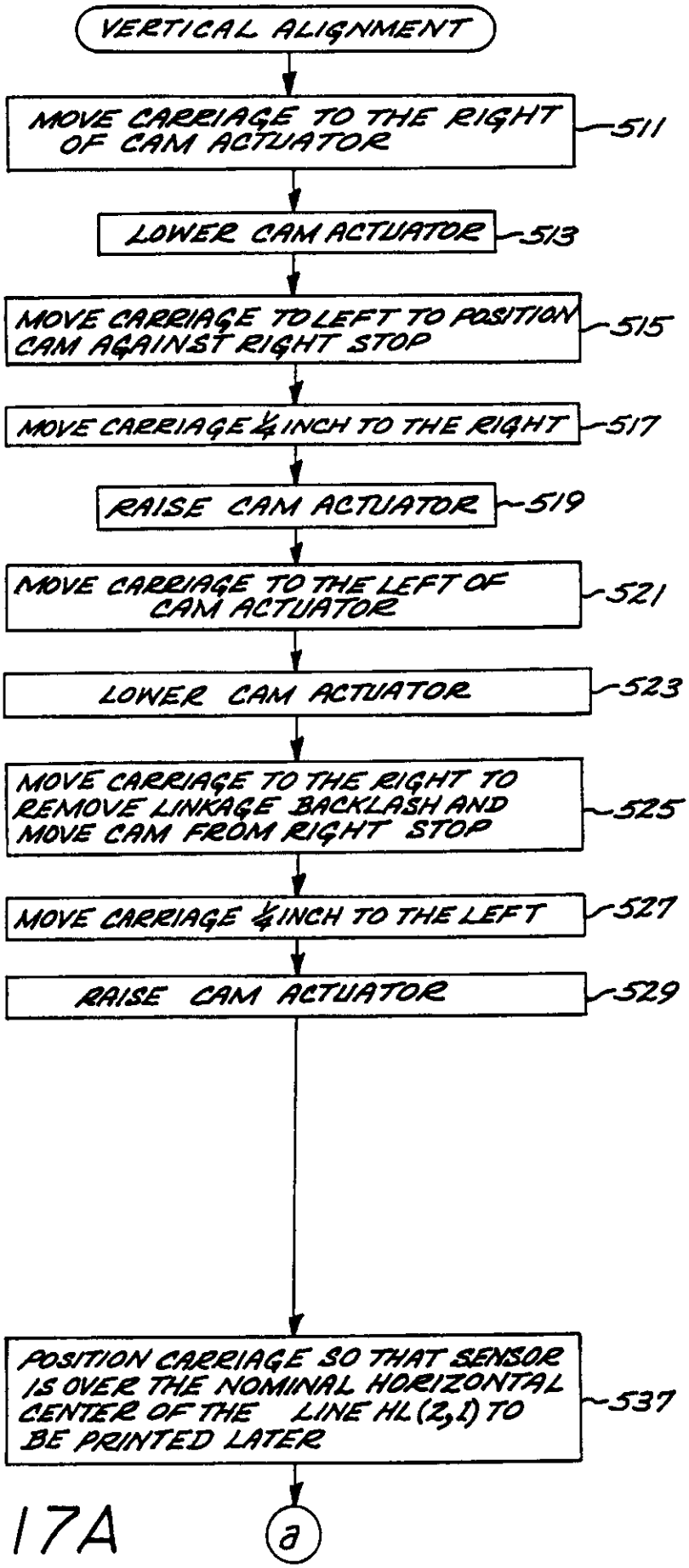
VERTICAL ALIGNMENT
MOVE CARRIAGE TO THE RIGHT OF CAM ACTUATOR
511
LOWER CAM ACTUATOR
513
MOVE CARRIAGE TO LEFT TO POSITION CAM AGAINST RIGHT STOP
515
MOVE CARRIAGE ¼ INCH TO THE RIGHT
517
RAISE CAM ACTUATOR
519
MOVE CARRIAGE TO THE LEFT OF CAM ACTUATOR
521
LOWER CAM ACTUATOR
523
MOVE CARRIAGE TO THE RIGHT TO REMOVE LINKAGE BACKLASH AND MOVE CAM FROM RIGHT STOP
525
MOVE CARRIAGE ¼ INCH TO THE LEFT
527
RAISE CAM ACTUATOR
529
POSITION CARRIAGE SO THAT SENSOR IS OVER THE NOMINAL HORIZONTAL CENTER OF THE LINE HL(2,1) TO BE PRINTED LATER
537
a

FIG. 17A

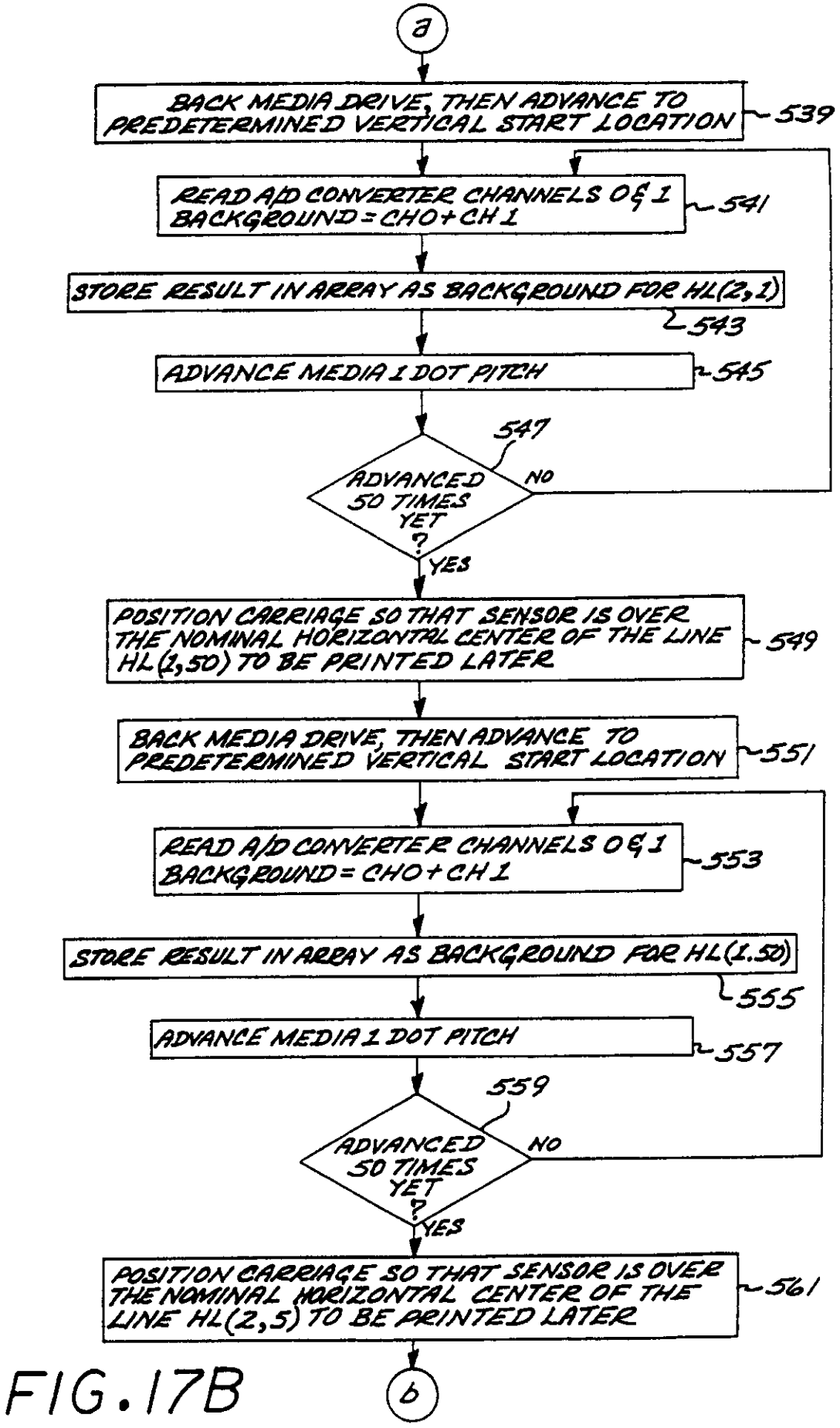
a
BACK MEDIA DRIVE, THEN ADVANCE TO PREDETERMINED VERTICAL START LOCATION
539
READ A/D CONVERTER CHANNELS 0 & 1 BACKGROUND = CH0 + CH1
541
STORE RESULT IN ARRAY AS BACKGROUND FOR HL(2,1)
543
ADVANCE MEDIA 1 DOT PITCH
545
547
ADVANCED 50 TIMES YET ?
NO
YES
POSITION CARRIAGE SO THAT SENSOR IS OVER THE NOMINAL HORIZONTAL CENTER OF THE LINE HL(1,50) TO BE PRINTED LATER
549
BACK MEDIA DRIVE, THEN ADVANCE TO PREDETERMINED VERTICAL START LOCATION
551
READ A/D CONVERTER CHANNELS 0 & 1 BACKGROUND = CH0 + CH1
553
STORE RESULT IN ARRAY AS BACKGROUND FOR HL(1.50)
555
ADVANCE MEDIA 1 DOT PITCH
557
559
ADVANCED 50 TIMES YET ?
NO
YES
POSITION CARRIAGE SO THAT SENSOR IS OVER THE NOMINAL HORIZONTAL CENTER OF THE LINE HL(2,5) TO BE PRINTED LATER
561
b

FIG. 17B

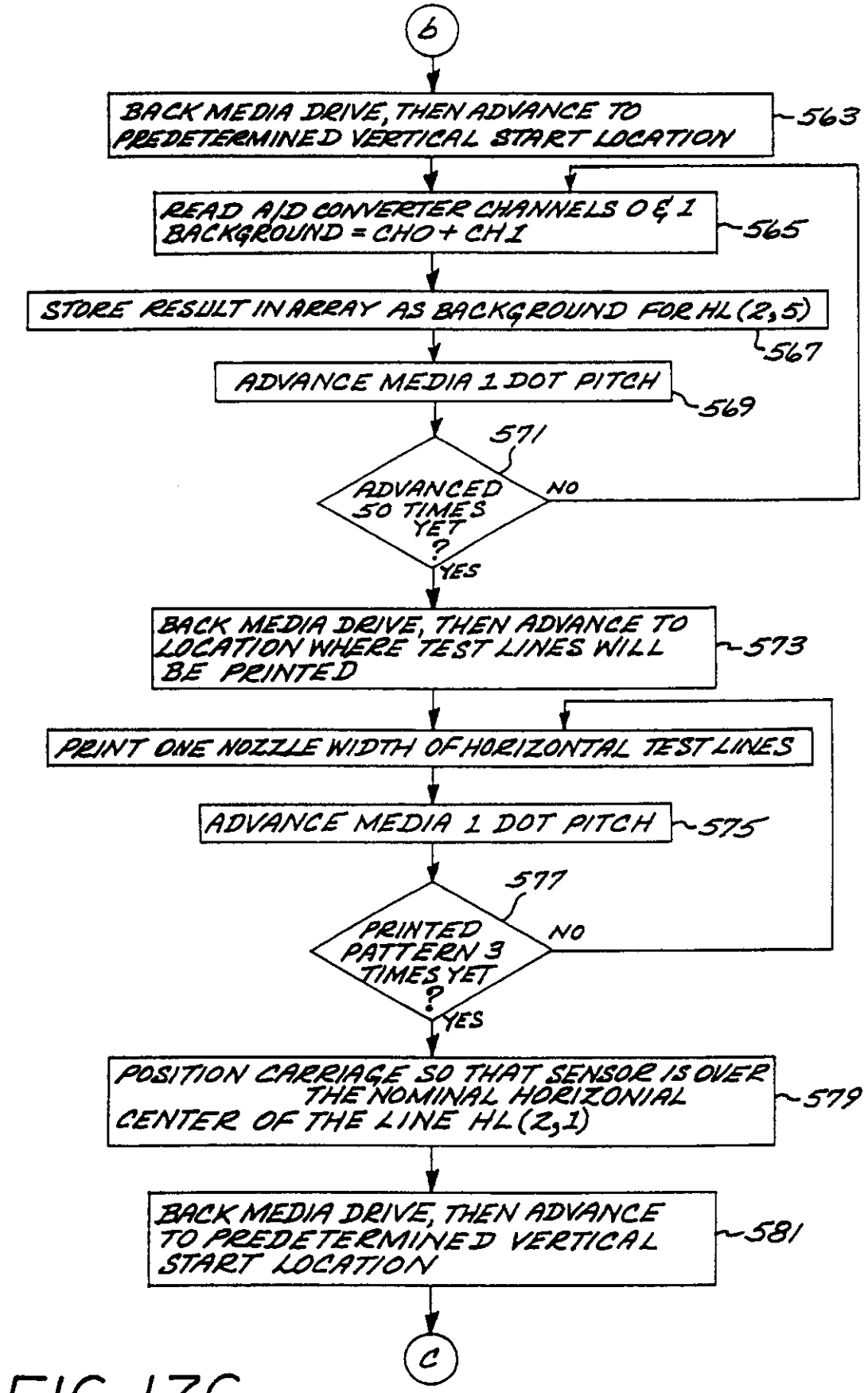
b
BACK MEDIA DRIVE, THEN ADVANCE TO PREDETERMINED VERTICAL START LOCATION
563
READ A/D CONVERTER CHANNELS 0 & 1 BACKGROUND = CH0 + CH1
565
STORE RESULT IN ARRAY AS BACKGROUND FOR HL(2,5)
567
ADVANCE MEDIA 1 DOT PITCH
569
571
ADVANCED 50 TIMES YET ?
NO
YES
BACK MEDIA DRIVE, THEN ADVANCE TO LOCATION WHERE TEST LINES WILL BE PRINTED
573
PRINT ONE NOZZLE WIDTH OF HORIZONTAL TEST LINES
ADVANCE MEDIA 1 DOT PITCH
575
577
PRINTED PATTERN 3 TIMES YET ?
NO
YES
POSITION CARRIAGE SO THAT SENSOR IS OVER THE NOMINAL HORIZONIAL CENTER OF THE LINE HL(2,1)
579
BACK MEDIA DRIVE, THEN ADVANCE TO PREDETERMINED VERTICAL START LOCATION
581
C

FIG.17C

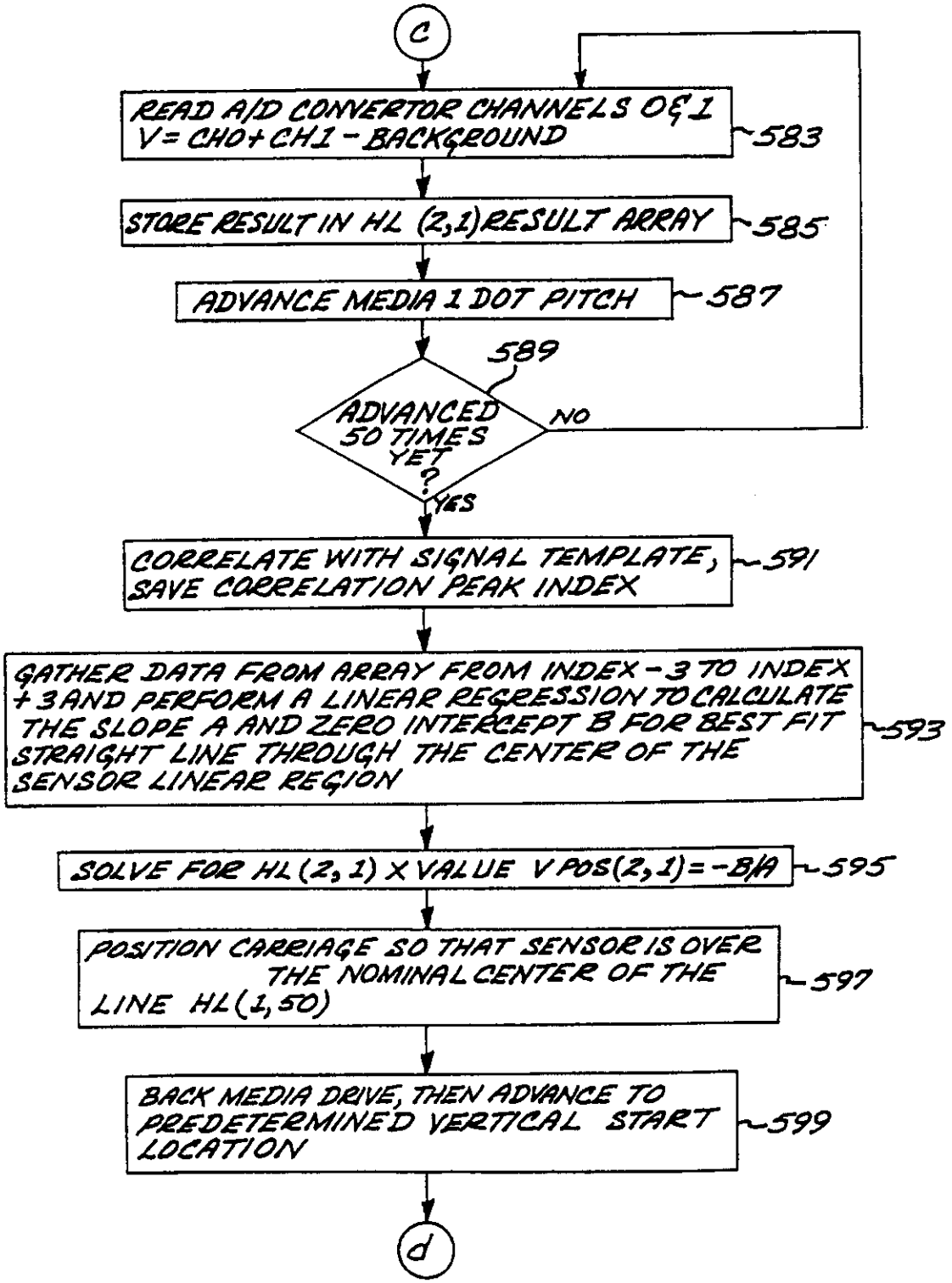
C
READ A/D CONVERTOR CHANNELS 0&1
V = CH0 + CH1 - BACKGROUND
583
STORE RESULT IN HL (2,1) RESULT ARRAY
585
ADVANCE MEDIA 1 DOT PITCH
587
589
ADVANCED 50 TIMES YET ?
NO
YES
CORRELATE WITH SIGNAL TEMPLATE, SAVE CORRELATION PEAK INDEX
591
GATHER DATA FROM ARRAY FROM INDEX - 3 TO INDEX + 3 AND PERFORM A LINEAR REGRESSION TO CALCULATE THE SLOPE A AND ZERO INTERCEPT B FOR BEST FIT STRAIGHT LINE THROUGH THE CENTER OF THE SENSOR LINEAR REGION
593
SOLVE FOR HL (2, 1) X VALUE V POS (2, 1) = -B/A
595
POSITION CARRIAGE SO THAT SENSOR IS OVER THE NOMINAL CENTER OF THE LINE HL (1, 50)
597
BACK MEDIA DRIVE, THEN ADVANCE TO PREDETERMINED VERTICAL START LOCATION
599
d

FIG. 17D

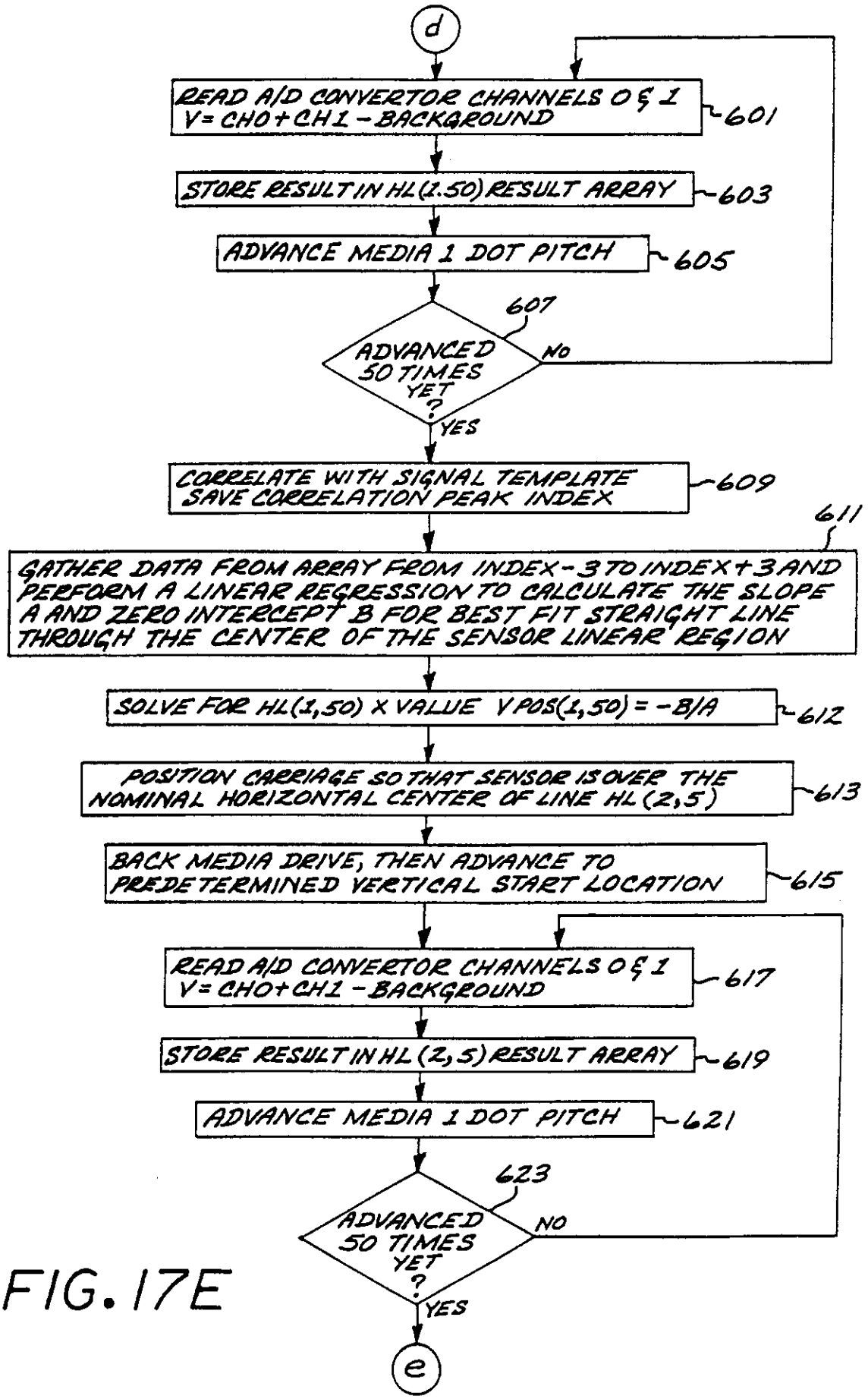
d
READ A/D CONVERTOR CHANNELS 0 & 1
V = CH0 + CH1 - BACKGROUND
601
STORE RESULT IN HL(1,50) RESULT ARRAY
603
ADVANCE MEDIA 1 DOT PITCH
605
607
ADVANCED 50 TIMES YET ?
NO
YES
CORRELATE WITH SIGNAL TEMPLATE
SAVE CORRELATION PEAK INDEX
609
611
GATHER DATA FROM ARRAY FROM INDEX-3 TO INDEX+3 AND PERFORM A LINEAR REGRESSION TO CALCULATE THE SLOPE A AND ZERO INTERCEPT B FOR BEST FIT STRAIGHT LINE THROUGH THE CENTER OF THE SENSOR LINEAR REGION
SOLVE FOR HL(1,50) X VALUE V POS(1,50) = -B/A
612
POSITION CARRIAGE SO THAT SENSOR IS OVER THE NOMINAL HORIZONTAL CENTER OF LINE HL(2,5)
613
BACK MEDIA DRIVE, THEN ADVANCE TO PREDETERMINED VERTICAL START LOCATION
615
READ A/D CONVERTOR CHANNELS 0 & 1
V = CH0 + CH1 - BACKGROUND
617
STORE RESULT IN HL(2,5) RESULT ARRAY
619
ADVANCE MEDIA 1 DOT PITCH
621
623
ADVANCED 50 TIMES YET ?
NO
YES
e

FIG. 17E

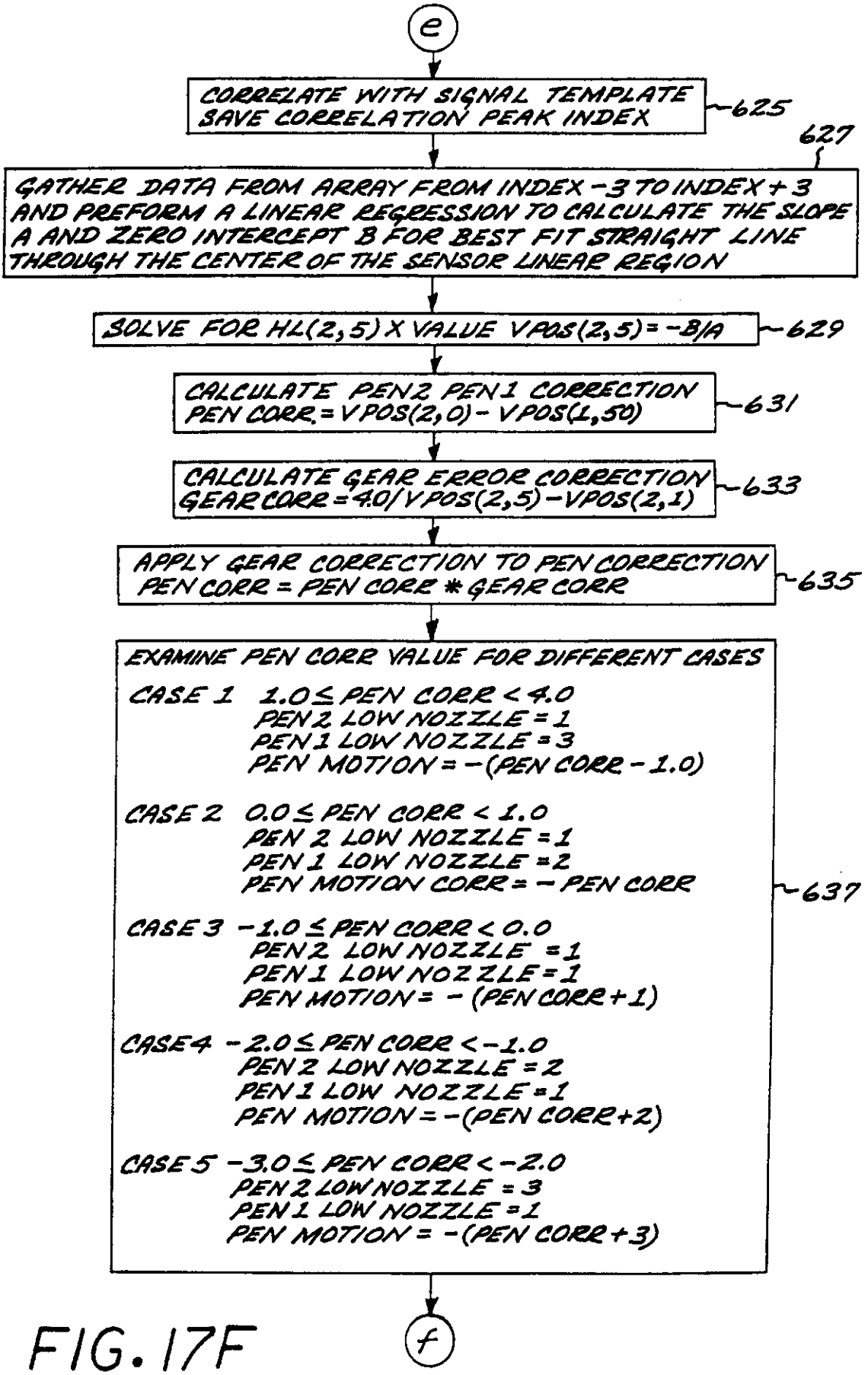
e
CORRELATE WITH SIGNAL TEMPLATE
SAVE CORRELATION PEAK INDEX
625
627
GATHER DATA FROM ARRAY FROM INDEX -3 TO INDEX + 3
AND PREFORM A LINEAR REGRESSION TO CALCULATE THE SLOPE
A AND ZERO INTERCEPT B FOR BEST FIT STRAIGHT LINE
THROUGH THE CENTER OF THE SENSOR LINEAR REGION
SOLVE FOR HL(2,5) X VALUE VPOS(2,5) = -B/A
629
CALCULATE PEN2 PEN1 CORRECTION
PEN CORR. = VPOS(2,0) - VPOS(1,50)
631
CALCULATE GEAR ERROR CORRECTION
GEAR CORR = 4.0/VPOS(2,5) - VPOS(2,1)
633
APPLY GEAR CORRECTION TO PEN CORRECTION
PEN CORR = PEN CORR * GEAR CORR
635
EXAMINE PEN CORR VALUE FOR DIFFERENT CASES
CASE 1 1.0 ≤ PEN CORR < 4.0
PEN 2 LOW NOZZLE = 1
PEN 1 LOW NOZZLE = 3
PEN MOTION = -(PEN CORR - 1.0)
CASE 2 0.0 ≤ PEN CORR < 1.0
PEN 2 LOW NOZZLE = 1
PEN 1 LOW NOZZLE = 2
PEN MOTION CORR = - PEN CORR
CASE 3 -1.0 ≤ PEN CORR < 0.0
PEN 2 LOW NOZZLE = 1
PEN 1 LOW NOZZLE = 1
PEN MOTION = - (PEN CORR + 1)
CASE 4 -2.0 ≤ PEN CORR < -1.0
PEN 2 LOW NOZZLE = 2
PEN 1 LOW NOZZLE = 1
PEN MOTION = -(PEN CORR + 2)
CASE 5 -3.0 ≤ PEN CORR < -2.0
PEN 2 LOW NOZZLE = 3
PEN 1 LOW NOZZLE = 1
PEN MOTION = -(PEN CORR + 3)
637
f

FIG. 17F

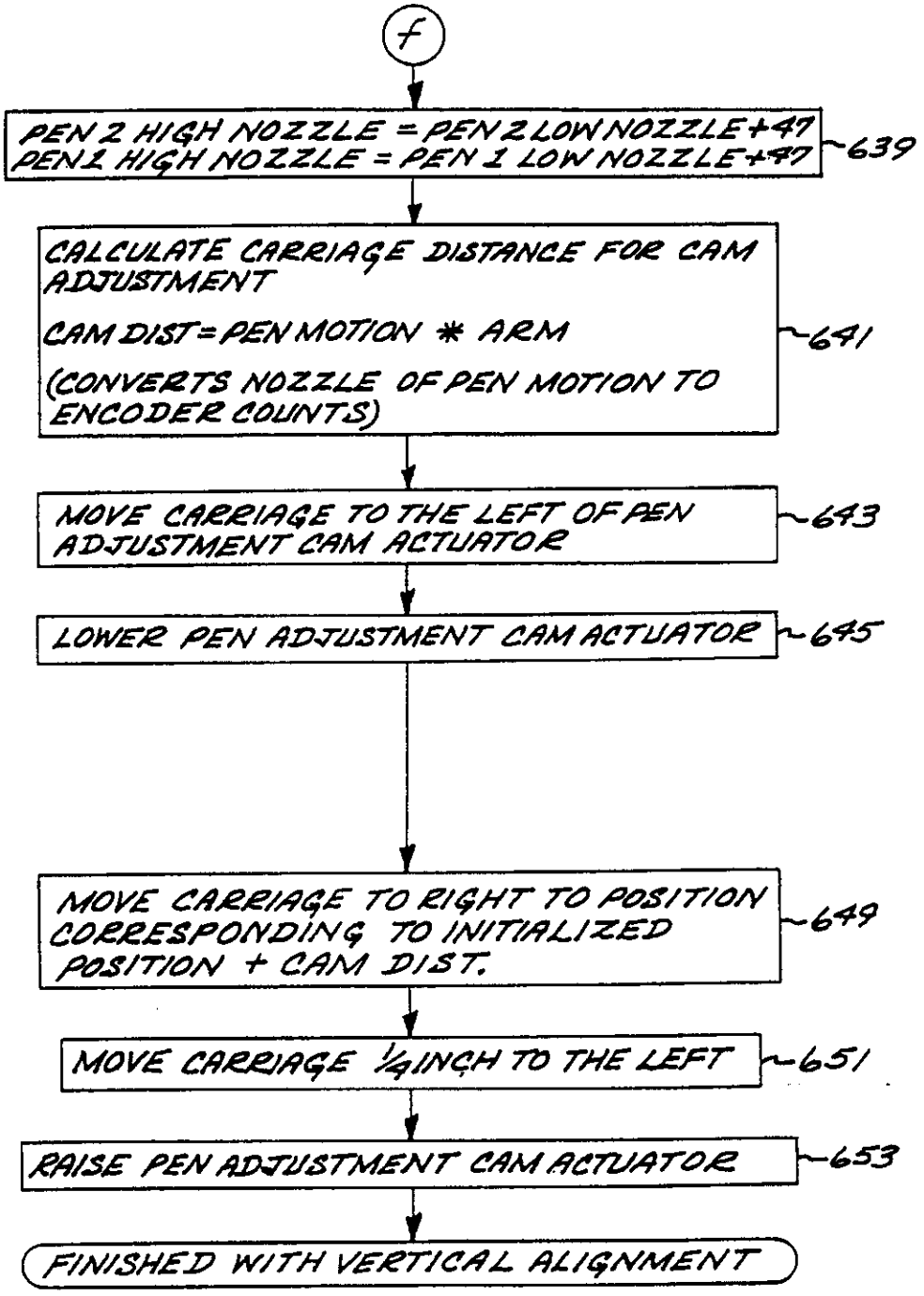
f
PEN 2 HIGH NOZZLE = PEN 2 LOW NOZZLE+47
PEN 1 HIGH NOZZLE = PEN 1 LOW NOZZLE+47
639
CALCULATE CARRIAGE DISTANCE FOR CAM ADJUSTMENT
CAM DIST = PEN MOTION * ARM
(CONVERTS NOZZLE OF PEN MOTION TO ENCODER COUNTS)
641
MOVE CARRIAGE TO THE LEFT OF PEN ADJUSTMENT CAM ACTUATOR
643
LOWER PEN ADJUSTMENT CAM ACTUATOR
645
MOVE CARRIAGE TO RIGHT TO POSITION CORRESPONDING TO INITIALIZED POSITION + CAM DIST.
649
MOVE CARRIAGE 1/4 INCH TO THE LEFT
651
RAISE PEN ADJUSTMENT CAM ACTUATOR
653
FINISHED WITH VERTICAL ALIGNMENT

FIG. 17G

REGISTER ENTRY FOR EP0540243

European Application No EP92309640.8 filing date 21.10.1992

Priority claimed:
31.10.1991 in United States of America - doc: 785650

Designated States DE FR GB IT

Title PRINT CARTRIDGE ALIGNMENT IN PAPER AXIS.

Applicant/Proprietor
HEWLETT-PACKARD COMPANY, 3000 Hanover Street, Palo Alto, California 94304-1181, United States of America [ADP No. 56257348003]

see (73)

Inventors
ROBERT D. HASELBY, 14475 Yazoo Street, San Diego, California 92129, United States of America [ADP No. 60837457001]

MICHAEL A. NGUYEN, Block 56, Cashew Park Condominum 01-01 Cashew Road, Singapore 2367, Singapore [ADP No. 60837465001]

Classified to
B41J

Address for Service
CARPMAELS & RANSFORD, 43 Bloomsbury Square, LONDON, WC1A 2RA, United Kingdom [ADP No. 00000083001]

EPO Representative
STEPHEN JAMES COLGAN, CARPMAELS & RANSFORD 43 Bloomsbury Square, London WC1A 2RA, United Kingdom [ADP No. 50906551001]

Publication No EP0540243 dated 05.05.1993
Publication in English

Examination requested 03.02.1994

Patent Granted with effect from 25.10.1995 (Section 25(1)) with title PRINT CARTRIDGE ALIGNMENT IN PAPER AXIS.

26.07.1993 EPO: Search report published on 25.08.1993
Entry Type 25.11 Staff ID. RD06 Auth ID. EPT

**** END OF REGISTER ENTRY ****

RENEWAL DETAILS

PUBLICATION NUMBER EP0540243

PROPRIETOR(S)

HEWLETT-PACKARD COMPANY, 3000 Hanover Street, Palo Alto, California 94304-1181, United States of America (see (2))

DATE FILED 21.10.1992

DATE GRANTED 25.10.1995

DATE NEXT RENEWAL DUE 21.10.1996

DATE NOT IN FORCE

DATE OF LAST RENEWAL

YEAR OF LAST RENEWAL 00

STATUS PATENT IN FORCE

**** END OF REPORT ****