E. D. LEWIS.

HYDROCARBON BURNER.

APPLICATION FILED NOV. 3, 1917.

1,299,968. Patented Apr. 8, 1919.

Fig. 1.

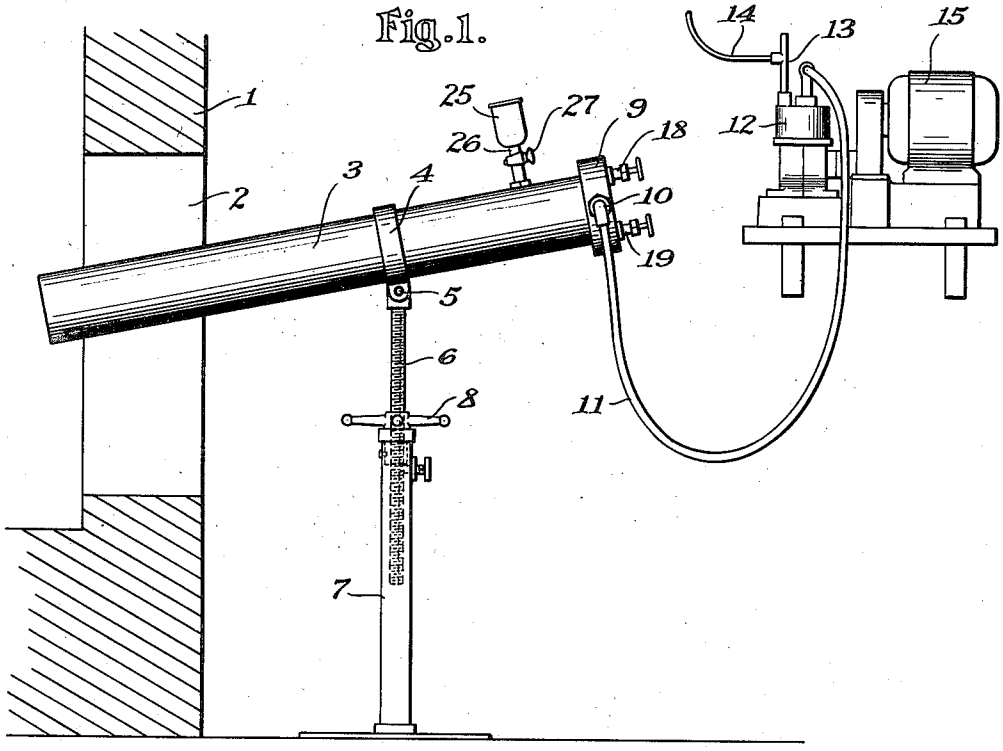

Fig. 2.

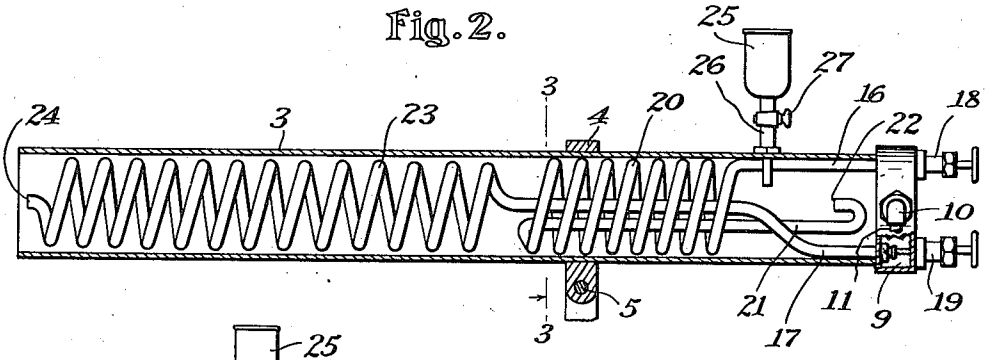

Fig. 3.

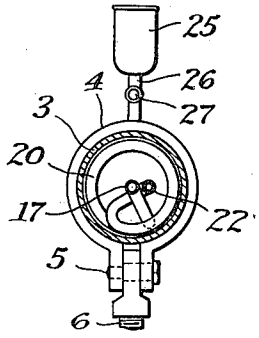

Inventor:

Edward D. Lewis

by Davis & Simmons

his attorneys

UNITED STATES PATENT OFFICE.

EDWARD DUDLEY LEWIS, OF ELMIRA, NEW YORK.

HYDROCARBON-BURNER.

1,299,968. Specification of Letters Patent. Patented Apr. 8, 1919.

Application filed November 3, 1917. Serial No. 200,179.

To all whom it may concern:

Be it known that I, EDWARD DUDLEY LEWIS, a citizen of the United States, and resident of Elmira, in the county of Chemung and State of New York, have invented certain new and useful Improvements in Hydrocarbon-Burners, of which the following is a specification.

The present invention relates to hydrocarbon burners, and an object thereof is to provide a construction which has an extremely long flame projection, such a burner being especially adapted for use in crematories of the type shown in my application #142,637, filed January 16, 1917, some of the features of this burner being illustrated and described in the before-mentioned application but not claimed therein.

To this and other ends, the invention consists of certain parts and combinations of parts all of which will be hereinafter described, the novel features being pointed out in the appended claims.

In the drawings:

Figure 1 is a side view of a burner constructed in accordance with the present invention;

Fig. 2 is a longitudinal section through the burner tube, showing the arrangement of the coils and nozzles; and

Fig. 3 is a section on the line 3—3, Fig. 2.

Referring more particularly to the drawings, 1 indicates the end wall of a crematory having a vertical slot 2 therein through which the burner tube 3 is projected. This burner tube 3 is surrounded by a collar or strap 4 which at 5 is pivoted to the upper end of a non-rotating screw 6, the latter operating within a tubular standard 7, at the upper end of which a nut 8 is mounted to rotate in order to coöperate with the screw to move the latter vertically so as to shift the vertical position of the tube 3, as well as permitting the tube to swing vertically. The rear or outer end of the tube 3 has a chamber 9 closing said tube, said chamber being provided with a valved inlet 10 to which a flexible tubing 11 is connected, said tubing leading from the discharge of a pump 12 or other air supply under pressure. The valved intake of the pump has a vertical piping 13 leading therefrom and open at its upper end, and connecting with the side of this piping 13 is a piping 14 which leads from a supply of gasolene or other hydrocarbon. The pump is driven in any suitable manner, as by the electric motor 15. It is apparent that the driving of the pump not only supplies the hydrocarbon to the chamber 9, but at the same time air is also supplied through the open upper end of the piping 13.

From the chamber 9 two pipes 16 and 17 lead, said pipes being controlled, respectively, by the valves 18 and 19. The pipe 16 has a helical coil 20 therein, the axis of which is coincident with the axis of the cylindrical tube 3. From the outer end of the coil a section 21 of the piping is extended rearwardly and then bent forwardly in line with the axis of the coil, to provide a nozzle 22 so that the flame from the nozzle will play upon the coil 20, thus heating the latter. The piping 17 is extended centrally through the coil 20, and is preferably also formed with a helical coil 23 in advance of the helical coil 20, the two coils having a common axis. At the forward end of the coil 23, and in proximity to the inner end of the tube 3, a nozzle 24 is arranged, this nozzle also being in line with the axis of the tube and the coils 20 and 23. The internal passageway through the piping 17 and its coil 23 is larger than the internal passageway through the piping 16 and its coil 20. Arranged exteriorly to the tube 3 is a cup or receptacle 25 which connects to the tube 3 near the outer end of the latter by means of a connection 26 in which a valve or turn plug 27 is arranged.

In using the burner, the receptacle or cup 25 is first filled with a priming charge which is deposited within the burner tube 3 and ignited so as to heat the coil 20. After the coil is heated, the pump 12 is started and the valve 18 is opened, thus permitting the hydrocarbon mixed with air to enter the piping 16 and its heated coil 20, where it is turned into gas and burns at the nozzle 22. This flame is projected forward by the air pressure and plays upon the coil 20 as well as that portion of the tube 17 within the coil 20, and also plays upon the coil 23 to heat the latter. After the coil 23 has been sufficiently heated the valve 19 is opened, so that the fuel with air and under pressure will enter the coil 23, where it is turned to gas and issues from the nozzle 24 under high pressure.

According to this invention it is possible to secure a flame projection of a great length. The orifice of the nozzle 24 has a diameter as large as the opening through any portion of the piping 17 or the coil therein, and the

flame issues from the nozzle under great pressure. This pressure tends also to clear the piping 17 of any hydrocarbon so that the clogging of the coil does not take place. The flame which is to be projected does not perform also the function of heating the fuel, but this heating is obtained by a separate nozzle and, as a consequence, the flame projecting nozzle has nothing to interfere with the length of its flame projection.

What I claim as my invention and desire to secure by Letters Patent is:—

1. A burner comprising a tube, a coil arranged in said tube, a nozzle connecting with said coil and adapted to distribute a flame on said coil, a second coil arranged in the tube in advance of the first named coil in a position to receive the flame from said nozzle, and a second nozzle connecting with the second named coil and discharging at the forward end of said coil.

2. A burner comprising a tube, a coil in said tube, a nozzle connecting with said coil and adapted to distribute a flame on said coil, a valve for controlling the flow through said coil and nozzle, a second nozzle arranged in the tube in advance of the first named nozzle and having a supply pipe arranged within the coil to be heated by the flame in the first named nozzle, and an independent valve for controlling the flow through the second named nozzle.

3. A burner comprising a tube, a coil arranged in said tube, a nozzle connecting with said coil and adapted to distribute a flame on the coil, a valve for controlling the flow through said nozzle and coil, a second coil arranged in the tube in line with the first named coil in a position to receive the flame from said nozzle, a second nozzle connecting with the second named coil and discharging in advance of the latter coil, and a valve for controlling the flow through the second named coil and its nozzle.

EDWARD DUDLEY LEWIS.