July 10, 1945. J. R. GASTON 2,380,300

PROCESS OF FABRICATING TRANSFORMERS

Filed Jan. 1, 1942 2 Sheets-Sheet 1

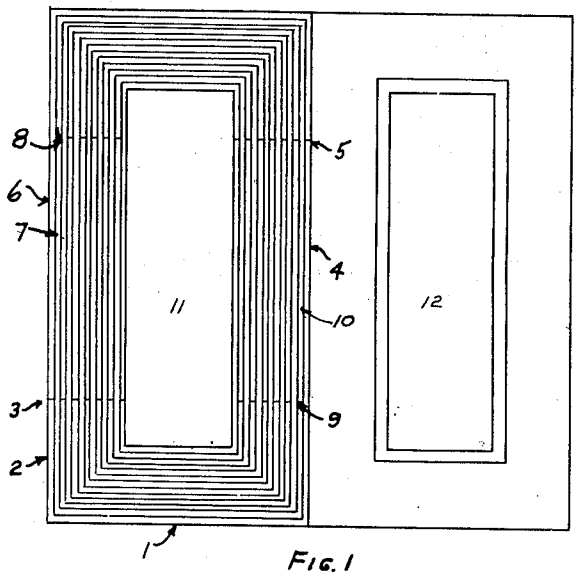

FIG. 1

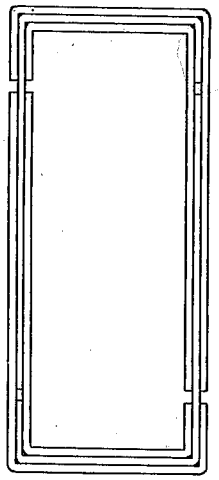

FIG. 2

FIG. 3

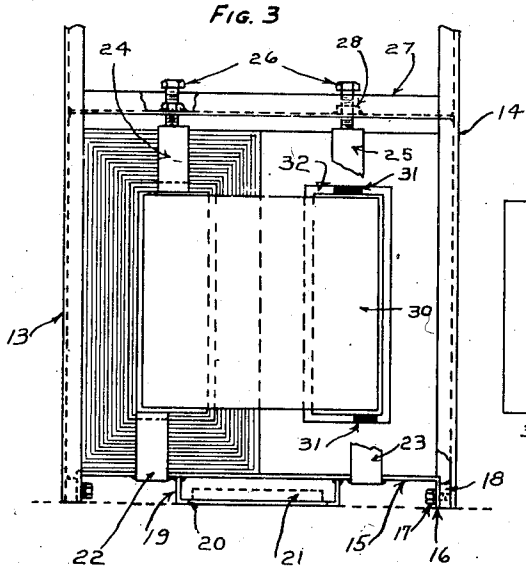

FIG. 4

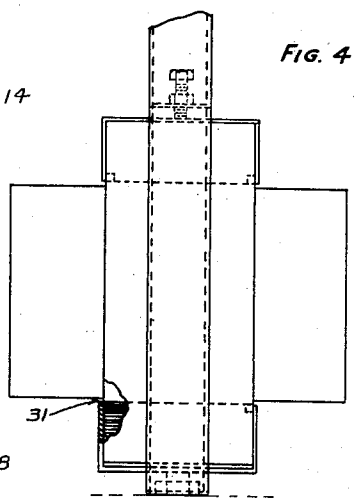

INVENTOR

BY John R. Gaston
A. Dill Libby

ATTORNEY

July 10, 1945. J. R. GASTON 2,380,300

PROCESS OF FABRICATING TRANSFORMERS

Filed Jan. 1, 1942 2 Sheets-Sheet 2

FIG. 5

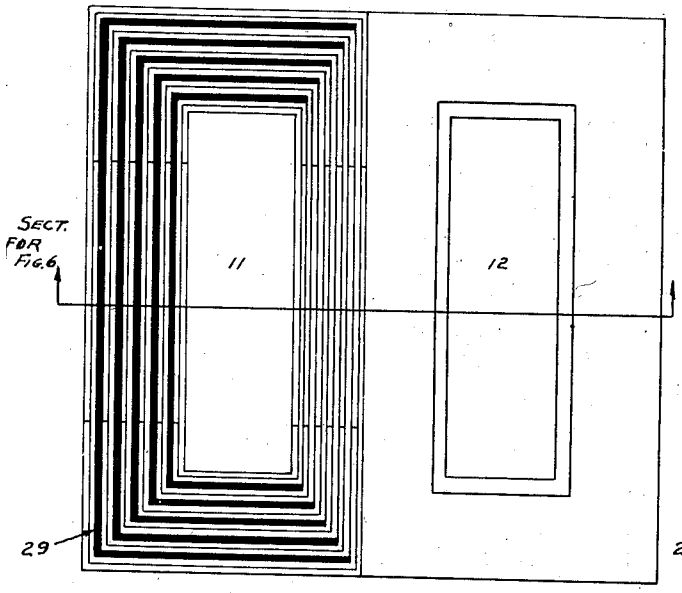

FIG. 7

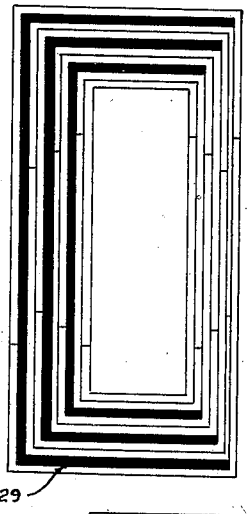

FIG. 8

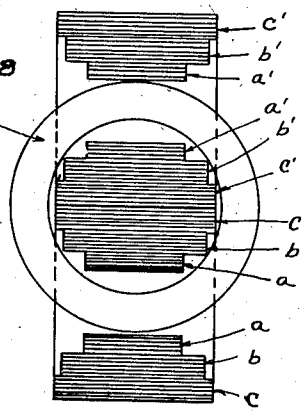

FIG. 6

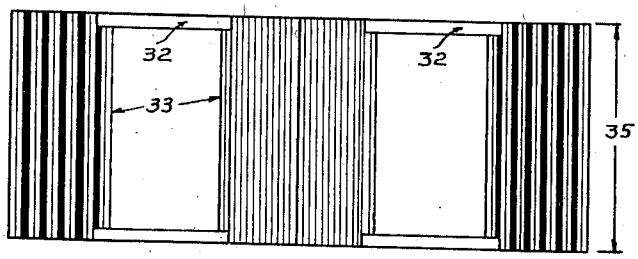

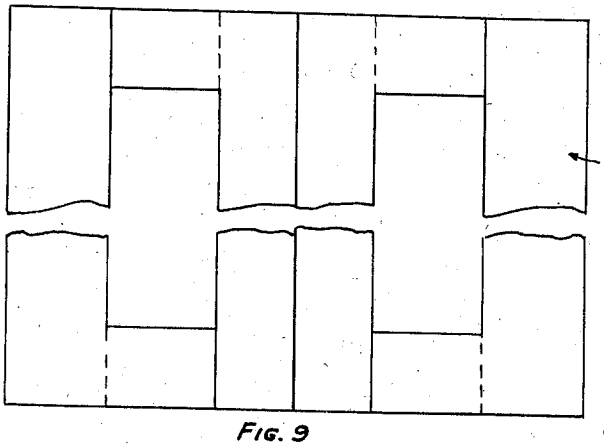

FIG. 9

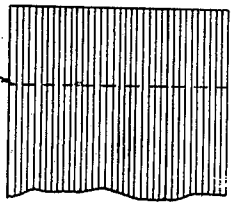

FIG. 10

INVENTOR

BY John R. Gaston

A. D. & J. Libby

ATTORNEY

Patented July 10, 1945 2,380,300

UNITED STATES PATENT OFFICE

2,380,300

PROCESS OF FABRICATING TRANSFORMERS

John R. Gaston, East Orange, N. J., assignor to American Transformer Company, Newark, N. J.

Application January 1, 1942, Serial No. 425,306

2 Claims. (Cl. 29—155.5)

This invention relates to the design of alternating current transformers but more particularly to the core used in such pieces of apparatus.

It is the general object of my present invention to provide a transformer which has numerous advantages over prior-art constructions. The principal advantages may be summarized as follows:

1. The cores may be fabricated for all commercial sizes and dimensions without the use of dies, which are more or less expensive, for punching the laminations such as are commonly used in making E and L-shaped punchings.

2. The same style core lamination may be used for shell-type, core-type, cruciform or rectangular type, single or multiple-phase.

3. The usual number of pieces required for assembling the core is less than one-half the number required in a transformer using L-shaped punchings.

4. The core construction is such that the flux lines pass through the laminations along the grain of the various laminae, thus giving minimum core losses.

5. The present construction eliminates all scrap of the lamination stock.

6. The present construction permits the use of high-flux density even above 14,000 gauss without causing the same increase in exciting current as found in prior-art structures.

7. There is no noise in this type of construction as compared to the humming noises present in prior-art structures.

8. The type of core herein described permits the use of various grades of transformer steel without changing the design of windings or coils.

9. The present design of core permits reduction in the quantity of steel and copper used in comparison to prior-art structures by the permissible increase of flux and current densities.

10. The type of core to be herein described permits a very high and efficient space factor.

11. The present type of core permits complete fabrication of the laminae on one machine preparatory to final annealing, if this is necessary, and assembly, by taking a continuous strip or roll of lamination stock and passing the same through a machine which performs various steps such as preheating, if required, cutting off pieces, removing burrs, if any, from the pieces, bending and stacking them ready for final annealing, if this is required, or assembly with the windings of the transformer.

12. The construction herein described permits the making of several cores simultaneously on one machine, carrying the laminations through the various steps listed under advantage number 11.

By way of illustrations but not of limitation, I have found that in the design of a 15 kva. transformer, according to prior-art designs with which I am familiar, using L-shaped laminations, the following is required: 75 pounds of copper; 145 pounds of steel and 20 pounds of scrap. According to my new design, using cold rolled lamination stock of the same thickness; i. e., approximately .015", I use 50 pounds of copper; 100 pounds of steel and no scrap, and it may be possible, as new transformer steels are developed, to show greater savings than above indicated.

These and other advantages can be obtained from my new and improved construction which is depicted on the annexed drawings wherein:

Figure 1 is a side elevation of a shell-type transformer without the winding and without the right half of the laminations being shown, those that are shown being on an enlarged scale to better illustrate the construction.

Figure 2 is a partial view showing a view of the laminations in the process of assembly.

Figure 3 is a view of the transformer including the windings and core set into a new type of frame.

Figure 4 is a view of Figure 3, looking from right to left.

Figure 5 is a view similar to Figure 1 but showing a modified form of construction.

Figure 6 is a view on the line 6—6 of Figure 5 with both core portions in position.

Figure 7 is a view similar to the left-hand portion of Figure 5 but showing a further modified form of construction.

Figure 8 is a view showing the application of my invention to a cruciform type of transformer.

Figure 9 is a partial plan view of an L-shaped lamination such as used in prior-art constructions.

Figure 10 is an end view of Figure 9 looking from right to left.

In the drawings wherein like numbers refer to corresponding parts, and referring to Figures 1 and 2, 1 is a generally U-shaped lamination having a short arm 2 beginning at the point 3 and a long arm 4 terminating at the point 5. A similar lamination, however numbered 6, is placed in reverse position and extends from the point 3 upwardly over the top of the stack and down to the point 5, thereby completing one layer composed of two identical laminations.

In the next inwardly positioned layer, a lamination 7 starts at the point 8 and continues to

the point 9, while a lamination 10 starts at the point 9 and continues upwardly over the top of the stack to the point 8. These two laminations 7 and 10 are identical but are placed in reverse order in the stack and each is shorter than the adjacent outside laminations in proportion to the thickness of the structure which is usually on the order of .015", but shown much thicker than this on the drawing in order to better illustrate the construction.

From what has been said it will be seen that each pair of laminae makes up a layer in the stack, these pairs differing in length from the next adjacent layer of pairs in accordance with the thickness of the stock.

In Figure 2, three sets of laminae are illustrated withdrawn a certain distance apart to better illustrate the construction, but it is to be understood that when the laminae are assembled as shown in Figure 1, the ends of the laminae form closely abutting joints; also, it will be noted that when the core laminations have been assembled in the windings which fill the spaces or windows 11 and 12, the flux path is in the direction of the grain of the lamination stock and the joints are alternated in the various layers of the stack.

In the formation of the stack as shown in Figures 1 and 2, I prefer to pass a continuous strip of lamination stock, which has previously been precoated with a mineral base coating, through a machine which wil first preheat the stock, if this is necessary, and then cut off the pieces—assuming that the machine has started to cut off the shorter pieces first—in pairs of the same length which are necessary for the shell-type core shown in Figure 1. Then the machine automatically cuts the next two pairs of a longer length in accordance with this thickness of the stock, and so progressively increases the length of the strips for the number required for a given design of transformer. It will be understood that the number of strips of the same length that are to be cut off will depend on whether or not the transformer is of the shell, core or cruciform type.

After cutting off the strips, if there are any burrs, these are eliminated in the machine, and in some cases it may be advisable to number the pieces in accordance with the position they are to occupy in the core assembly, so that if by accident during some subsequent operation such as annealing, a stack should be accidentally tipped over, the assembler will know where the numbered laminae should be used. In numbering these, I prefer to use a suitable pigment or mineral base paint.

Then the machine bends the pieces across their flat faces into U-shape, with one arm longer than the other as has been explained, and then stacks similar pieces together for transmission to an annealing oven or, if annealing is not required, to to an assembly position for assembly with the windings, the pieces after assembly being positioned as has been described with reference to Figure 1. While I have mentioned a single strip, it will be obvious that a plurality of strips may be passed through the machine simultaneously in order to speed up production.

After the core and windings have been assembled, the unit is then ready for the frame members shown in Figures 3 and 4. The frame comprises two side channel irons 13 and 14 anchored together at the bottom by a metallic strip 15 having its ends 16 bent downwardly and fastened by set screws 17 into metal blocks 18 welded to the interior portion of the channels. Welded to the strip 15 is a U-shaped member 19 which has an opening 20 therein adapted to fit over a locating member 21 which is fastened in a transformer casing.

Also welded to the strip 15 are two yokes 22 and 23 which embrace the lower portions of the laminations. Similar yokes 24 and 25 are positioned over the top portions of the laminations and are forced downwardly thereagainst by set screws 26 carried in a cross-channel 27 which has nuts or threaded members 28 welded thereto in order to give sufficient threads for the set screws 26.

Insulating strips 31 are positioned in spaces 32 (see Figure 6) to hold the narrower laminae 33 in position. These narrower laminae are used in order to make it easier for assembling the laminations in the coils or windings and without any danger of the laminations cutting into the windings. While this construction is not absolutely necessary, I prefer to use it for the reasons stated.

After the core and windings have been assembled in the frame as described, the whole unit is ready to be mounted in a transformer casing by attachment to the side channels 13 and 14 in any satisfactory manner.

In Figure 5 the construction is the same as described with respect to Figure 1, with the addition of special U-shaped inserts 29 which are shown by heavy black lines. These inserts are made as indicated; that is to say, increasing in length progressively from the inside outwardly, and U-shaped having arms or equal length. They are preferably made of the same thickness of stock as the other laminations, although they may be made of thicker material or of somewhat cheaper material, and when used are for the purpose of increasing the core area in that part of the core exterior to the part embraced or encompassed by the windings which are positioned in the windows 11 and 12. By this construction the central part of the core, or that surrounded by the windings, may be operated at a higher flux density than the exterior part of the core which is made of greater cross-sectional area by reason of the inserts 29. These inserts may be used between each second, third, fourth, fifth or any other number of layers of the regular laminations shown and described with respect to Figure 1.

In Figure 7 the inserts 29 are the same as shown in Figure 5, but the other extended laminations are formed and assembled so that the joints are in staggered relation, thus giving a better chance for the flux to disperse into adjacent laminations should, for any reason, an improper butt joint be made between two of the laminations. The same staggering of joints may of course be utilized in the construction shown in Figure 1.

In both the forms shown in Figures 1 and 5, the laminations are all of the same width but of progressively varying lengths. However, in the cruciform type of construction shown in Figure 8, the laminae are arranged in steps or groups *a*, *b*, *c*, *a'*, *b'*, *c'*. The groups *a*—*a'*, *b*—*b'* and *c*—*c'* are alike and each group contains laminae of the same width but progressively varying in length made according to the construction shown in Figure 2. If desired, suitable inserts corresponding to 29 may be used in the portions of the core outside the windings 30.

Where the construction is used in connection with a core type transformer, the laminae are the same as have been described, but where the inserts 29 are used, they will be straight pieces positioned in the yokes of the core. This type of core has not been shown as it will be readily

understood how the invention is applied thereto; neither has a multi-phase transformer been shown as its application thereto will also be readily understood.

By reference to Figures 9 and 10 which illustrate a shell-type transformer made up of conventional L-type punchings, it will be seen that the leg **34** is much narrower than the width **35** of the lamination in Figure 6, and because of this, to get the necessary amount of material to carry the same number of flux lines for the same capacity transformer, a greater number of laminations must be used. This means extra cost in fabrication of the laminations per se and a greater increase of cost in assembly as many more pieces must be handled. As will be seen by reference to Figures 9 and 10, the joints **36** must be in alignment across the core unless numerous dies be made to get the joints staggered as shown in Figure 7. In the present construction such as illustrated in Figure 7, where the joints are staggered, this merely means a difference in the bending operation.

I have found that a transformer constructed as herein shown and described will obtain all the advantages heretofore set forth.

What I claim is:

1. The process of fabricating a transformer including windings and a core, which consists in taking a flat strip of precoated lamination stock, cutting off pieces, a certain number of which are of the same length, then cutting off a certain number of other pieces differing in length from the first-mentioned pieces, bending the pieces across their flat faces into U shape, with one arm longer than the other, then building up stacks with pieces of progressively increasing length for at least the purpose of ease in assembly with the winding, also taking a similar strip of lamination stock and putting it through the same steps up to the point of bending, then bending these pieces across their flat faces into U shape with equal arms, then building up a stack with these pieces of progressively increasing length for at least the purpose of ease in assembly with the windings, then finally assembling the two types of stacks into the windings, utilizing the U-pieces with equal arms in spaced relation with the other laminations to increase the core area in the parts of the core exterior to the parts embraced by the windings as and for the purpose described.

2. The process of fabricating a transformer including windings and a core, which consists in taking a flat strip of precoated lamination stock, cutting off pieces, a certain number of which are of the same length, then cutting off a certain number of other pieces differing in length from the first-mentioned pieces, bending the pieces across their flat faces into U shape, with one arm longer than the other, then building up stacks with pieces of progressively increasing length for at least the purpose of ease in assembly with the winding, also taking a similar strip of lamination stock and cutting off straight pieces increasing progressively in length according to the position which they are to occupy in the stack, then building up a stack with these pieces in progressive order of their length for at least the purpose of ease in assembly with the windings, then finally assembling the two types of stacks into the windings, utilizing the straight pieces in spaced relation with the other laminations throughout the parts of the core exterior to the parts embraced by the windings as and for the purpose described.

JOHN R. GASTON.