C. M. LEECH.

INTERNAL COMBUSTION ENGINE.

APPLICATION FILED NOV. 25, 1911. RENEWED JUNE 12, 1913.

1,068,595. Patented July 29, 1913.

4 SHEETS—SHEET 1.

Fig. 1.

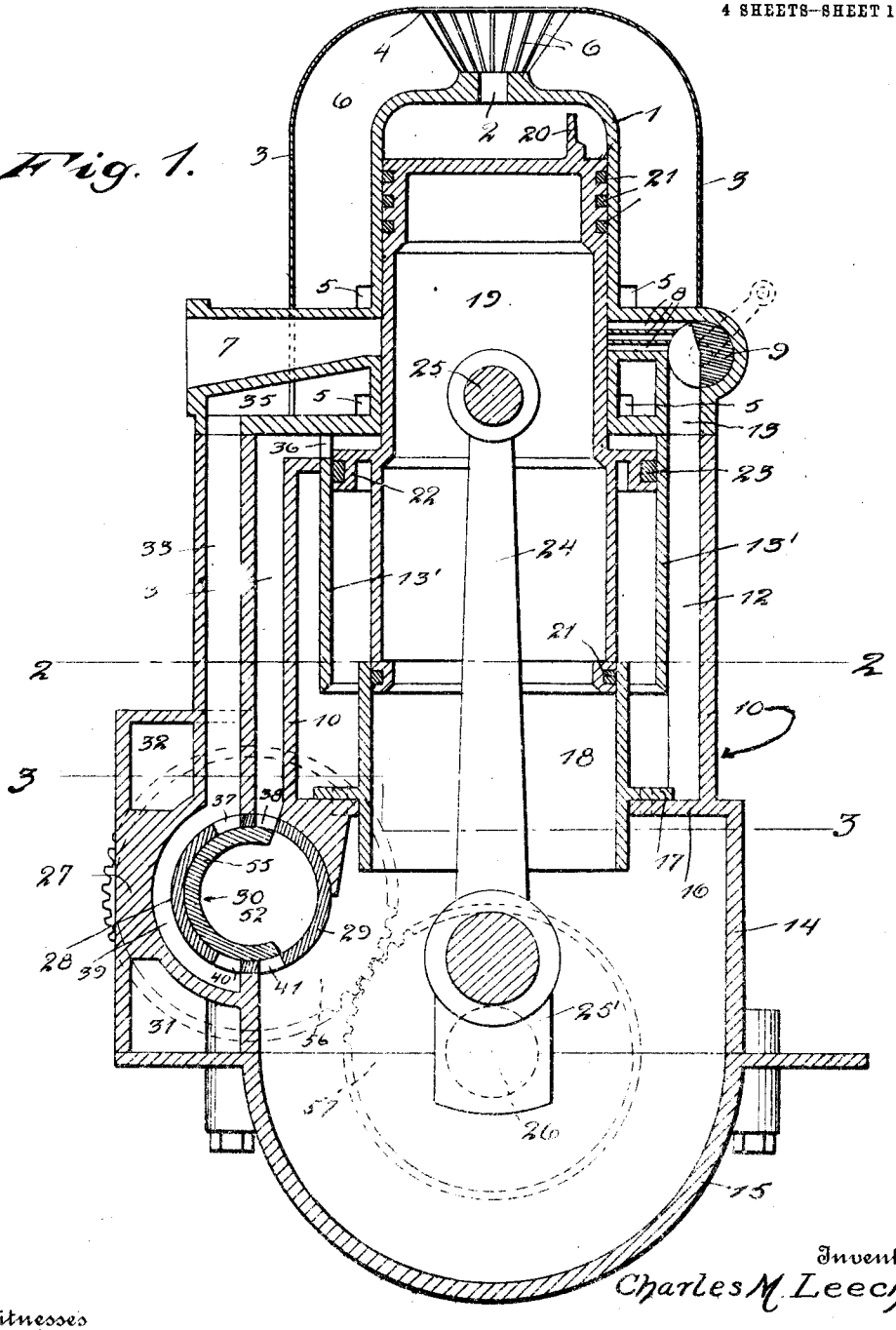

Witnesses

J. Milton Jester

B. H. Hirshheimer

Inventor

Charles M. Leech

By C. L. Parker.

Attorney

C. M. LEECH.

INTERNAL COMBUSTION ENGINE.

APPLICATION FILED NOV. 25, 1912. RENEWED JUNE 12, 1913.

1,068,595. Patented July 29, 1913.

4 SHEETS—SHEET 2.

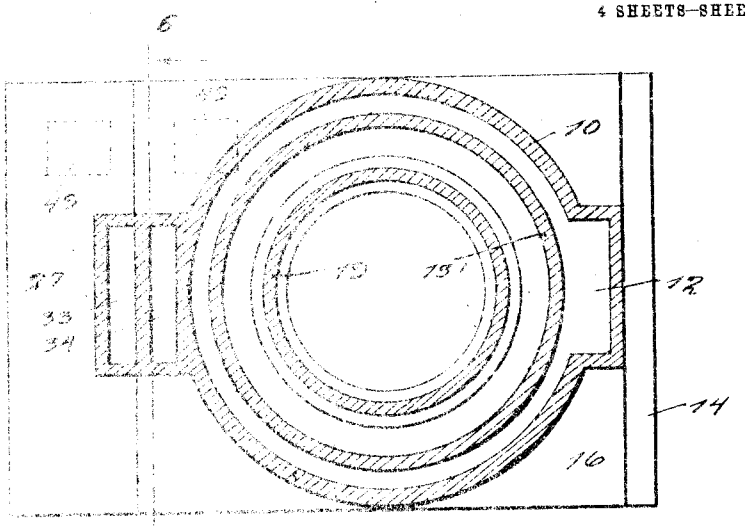

Fig. 2.

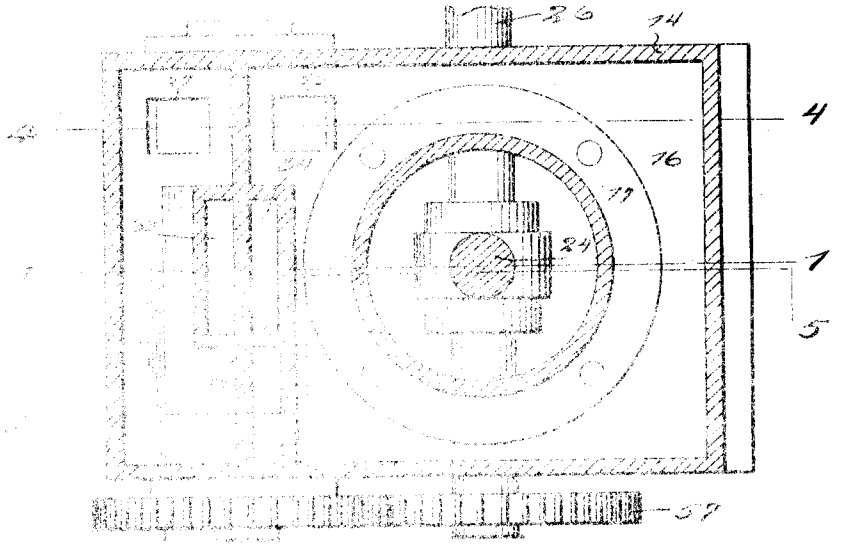

Fig. 3.

Witnesses

Inventor
Charles M. Leech.

By C. L. Parker.
Attorney

C. M. LEECH.

INTERNAL COMBUSTION ENGINE.

APPLICATION FILED NOV. 25, 1911. RENEWED JUNE 12, 1913.

1,068,595. Patented July 29, 1913.

4 SHEETS—SHEET 3.

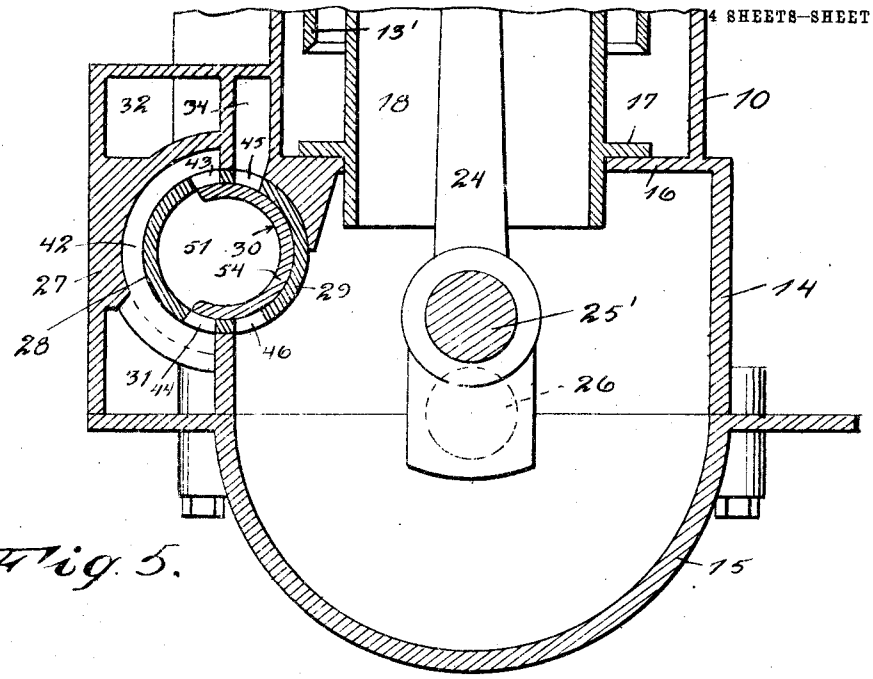

Fig. 5.

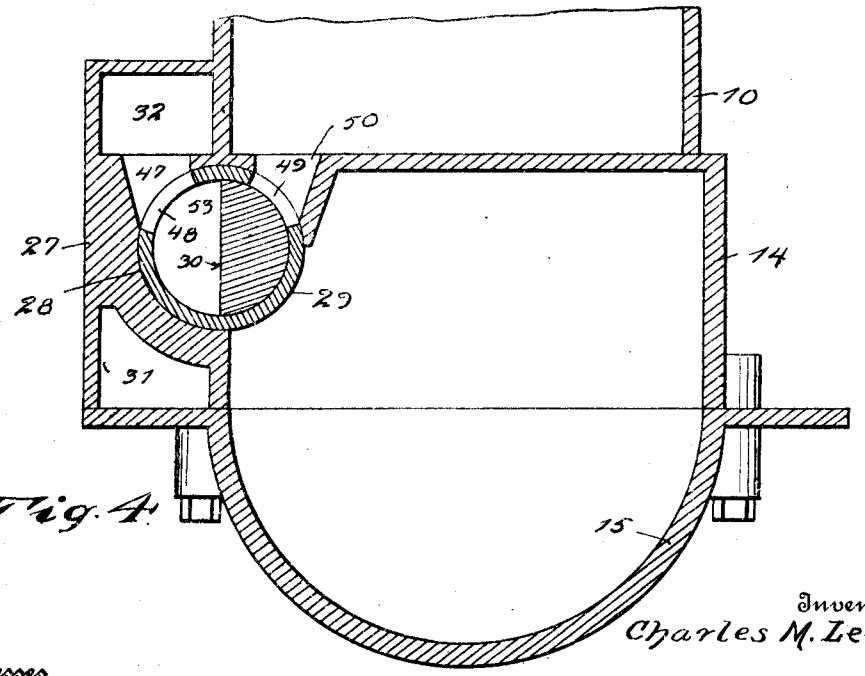

Fig. 4.

Witnesses

Milton Jester

B. F. Lehmann

Inventor

Charles M. Leech

By C. L. Parker

Attorney

C. M. LEECH.

INTERNAL COMBUSTION ENGINE.

APPLICATION FILED NOV. 25, 1911. RENEWED JUNE 19, 1913.

1,068,595.

Patented July 29, 1913.

4 SHEETS-SHEET 4.

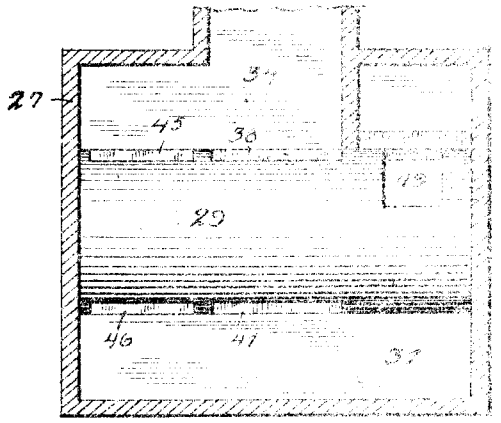

Fig. 6.

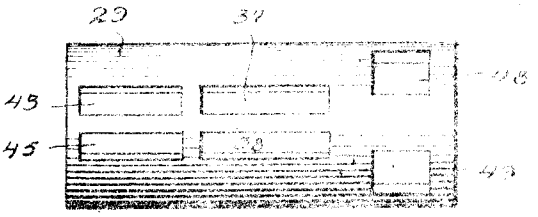

Fig. 7.

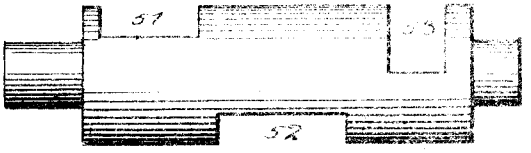

Fig. 8.

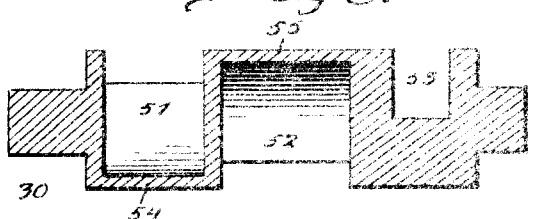

Fig. 9.

Inventor
Charles M. Leech

Witnesses
J. Milton Jester
B. F. Fuhlbrunner

By C. L. Parker
Attorney

UNITED STATES PATENT OFFICE.

CHARLES M. LEECH, OF LIMA, OHIO.

INTERNAL-COMBUSTION ENGINE.

1,068,595. Specification of Letters Patent. Patented July 29, 1913.

Application filed November 25, 1911, Serial No. 662,388. Renewed June 12, 1913. Serial No. 773,347.

To all whom it may concern:

Be it known that I, CHARLES M. LEECH, a citizen of the United States, residing at Lima, in the county of Allen and State of Ohio, have invented certain new and useful Improvements in Internal-Combustion Engines, of which the following is a specification.

The present invention relates to internal combustion engines and more particularly to a two-cycle air cooled engine.

An important object of the invention is to provide novel means for controlling the feed of the explosive charge and of air for cooling the piston and cylinder.

A further object of the invention is to provide a device of the above mentioned character, which is reliable in operation, simple in construction, and cheap to manufacture.

Other objects and advantages of this invention will be apparent during the course of the following description.

In the accompanying drawings forming a part of this specification and in which like numerals are employed to designate like parts throughout the same, Figure 1 is a vertical sectional view through the engine, taken on line 1—1 of Fig. 3, Fig. 2 is a horizontal sectional view taken on line 2—2 of Fig. 1, Fig. 3 is a similar view taken on line 3—3 of Fig. 1, Fig. 4 is a fragmentary vertical sectional view taken on line 4—4 of Fig. 3, Fig. 5 is a similar view on line 5—5 of Fig. 3, Fig. 6 is a vertical sectional view taken on line 6—6 of Fig. 2, Fig. 7 is a plan view of a valve cage or seat, Fig. 8 is a side elevation of a valve, and, Fig. 9 is a central vertical sectional view through the valve.

In the drawings wherein is illustrated a preferred embodiment of my invention, the numeral 1 designates an explosion cylinder having the ordinary opening 2 formed through its upper end for receiving a spark plug (not shown). Surrounding this cylinder is a jacket 3, provided at its upper end with a central opening 4. Interposed between this jacket and the explosion cylinder are heat radiating fins 6, radially disposed and spaced, as shown, and provided with openings 5 to establish free communication between the spaces formed between the fins 6. The explosion cylinder 1 is provided near its lower end with an exhaust port 7 and opposite this exhaust port with a plurality of gas supply ports 8. A pivoted valve 9 is positioned near the ports 8, to control the passage of material through the same, and this valve may preferably be actuated by a centrifugal governor (not shown). Connected with the cylinder 1 is an outer intermediate casing or shell 10, having free communication with a gas port or conduit 12, formed upon one side thereof. This port has communication with the ports 8 through a port 13. Disposed within the intermediate casing 10 is a compression cylinder 13′, having free communication at its lower end with said casing 10, as shown. Formed preferably integral with the lower end of the casing 10 is a crank casing section 14, to which is secured a co-acting section 15, the two sections forming a closed crank case. The casing 10 is provided at its lower end with an annular flange 16, upon which is secured a flange 17 formed upon a crank case cylinder 18, annular in horizontal cross-section, as shown. Disposed to reciprocate in the cylinder 1 is a piston 19 provided upon its head with a flange 20, as is customary. The piston 19 is formed hollow, as shown, and extends downwardly so that its lower end operates within the crank case cylinder 18. This piston may preferably be provided with ordinary packing rings 21. The piston 19 is provided substantially midway its ends with an auxiliary compression piston 22, operating in the compression cylinder 13′, as shown. The compression piston is preferably in the form of an annulus provided with a groove for receiving a packing ring 23. Extending through the piston 19 is a pitman 24, having its upper end pivotally connected with said piston through the medium of a pin 25. This pitman extends downwardly to operate in the crank case and is therein pivotally connected with a crank 25′. The crank 25′ is formed upon a crank shaft 26, which carries a fly wheel (not shown).

Disposed upon the upper crank case section 14 is housing 27, preferably in the form of a casting, made integral with said section 14, through which are formed various ports and openings to be next described.

Formed through the casting 27 is a cylindrical main or central opening 28, for receiving a valve casing or cage 29. Disposed for rotation within this valve casing or cage is a

valve 30, the detail structure of which will be given hereinafter. Formed in the lower portion of the casting 27 is a port or manifold 31, to receive cooling air exhausted from the crank case and having connection with the muffler pipe (not shown). Formed in the upper portion of the casting 27 is a port or manifold 32, having connection with the carbureter (not shown) to supply the explosive charge or gas into the casing 10.

Attention is called to the fact that Fig. 1 is a section taken on line 1—1 of Fig. 3, in which numerals 33 and 34 designate cooling air supply ports, vertically disposed, as shown. The inner wall of the port 34 is formed of a portion of the wall of the casing 10, as shown. The port 33 is in free communication at its upper end with a port 35, having free communication with the interior of the jacket 3. At its upper end the port 34 leads into an opening 36, formed through the upper end of the compression cylinder 13′, whereby cooling air may be supplied through the port 34 into the compression cylinder 13′ above the auxiliary compression piston 22, when said piston descends. The ports 33 and 34 have communication respectively at their lower ends with openings 37 and 38, formed through the valve casing 29. The port 33 is extended in the form of a curved port 39, the lower end of which is in communication with an opening 40, disposed near a coöperating opening 41. The openings 40 and 41 are formed through the valve casing 29.

Attention is now called to Figs. 3 and 5, it being remembered that Fig. 5 is a vertical section on line 5—5 of Fig. 3. The exhaust port or manifold 31 leads into an upper curved port 42, having free communication at its upper and lower ends respectively with openings 43 and 44, formed through the valve cage or casing 29. Disposed near the opening 43 is a co-acting opening 45, having free communication with the lower horizontal portion of the port 34. Disposed near the opening 44 is a co-acting opening 46 having free communication with the interior of the crank case, as shown. It is thus seen that when openings 43 and 45 are in communication, the conduit or port 34 will exhaust air into the manifold 31 and when openings 44 and 46 are in communication air will be exhausted from the crank case into the manifold 31.

Attention is now called more particularly to Figs. 3 and 4 and to the fact that Fig. 4 is a vertical section taken on line 4—4 of Fig. 3. The carbureter manifold or port 32, has free communication with a port 47, in registration with a gas supply opening 48 formed through the valve casing 29, as shown. Formed through this casing 29 and near the opening 48 is a co-acting gas supply opening 49, in registration with a port 50, which has free communication with the lower end of the outer intermediate casing 10, as shown. Attention is called to the fact that the port 50 has no communication with the crank casing. When the valve 30 is rotated so that ports 47 and 50 are brought into communication, it will be seen that the explosive charge or gas will be fed from the manifold 32 into the lower end of the casing 10.

The valve 30 is preferably formed of a solid cylinder of metal, having recesses or openings 51, 52 and 53 cut or cored out of the same. Attention is called to the fact that the openings 51 and 53 face in the same direction and that opening 52, disposed between the other openings faces in the opposite direction. The opening 51 extends through one side of the valve and forms a curved section 54. The opening 52 extends through one side or face of the valve and forms a section 55, curved, as shown. The opening 53 is semi-cylindrical, as shown. When the valve is in its operative position within the casing 29, the opening 51 is adjacent openings 43. 45, and 44, 46; opening 52 is adjacent openings 37, 38, and 40, 41; and opening 53 is adjacent openings 48 and 49.

The valve 30 has a pinion 56 rigidly connected therewith, which pinion is driven by a pinion 57, fast upon the crank shaft 26.

The operation of the engine is as follows:—When the piston 19 moves upwardly the crank shaft 26 through the medium of pinions 55 and 56, will turn the valve 30 so that the opening 53 will be positioned to establish communication between openings 48 and 49, whereby such upward movement of the piston will suck or draw the carbureted gas into the casing 10 and the compression cylinder 13′. Upon the descent of the piston the gas is somewhat compressed in cylinder 13′ and forced upwardly through the port 12 to ports 8, from which said gas is discharged into the explosion cylinder 1 after the piston uncovers the exhaust port 7 and said ports 8. Upon its upward movement the piston 19 covers ports 7 and 8 and entraps the gases introduced into the cylinder through ports 8, to highly compress the same by the time said piston has reached its uppermost position, subsequently to which said gas is fired in accordance with the ordinary practice. The piston is then driven downwardly. When the piston 19 starts on its downward travel the section 55 of the valve 29 uncovers openings 37 and 38, whereby air is drawn into the jacket 3 about the cylinder 1 and between the fins 4, through port 33, openings 37 and 38, port 34 and through opening 36 in the compression cylinder 13′ above the descending auxiliary piston 22. In this manner the cylinder 1 is cooled by the circulation of air exteriorly thereof, the compres-

sion cylinder 13′ cooled by the introduction of the air into the same, and the piston 19 cooled by circulating the air exteriorly thereof in the cylinder 13′. When the air is thus being drawn into the upper end of the cylinder 13′, cooling air is being exhausted from the crank case. Attention is called to the fact that sections 54 and 55 of the valve 29 are oppositely faced. It is thus seen that the section 54 will at this time be moved to uncover openings 44 and 46 (see Fig. 5), openings 43 and 45 being uncovered. The downward movement of the piston will now force the cooling air from the crank case, through openings 46 and 44, into the exhaust port or manifold 31. When the piston travels upwardly the section 55 is moved to uncover the openings 40 and 41, whereby air will be drawn into the crank case through ports 33, 39 and said openings 40 and 41. The openings 37 and 38 are now covered. The openings 44 and 46 (see Fig. 5) are now covered and openings 43 and 45 are uncovered, whereby the air in the compression cylinder 13′ above piston 22 may be exhausted through opening 36, port 34, openings 43 and 45, and through port 42 into the exhaust manifold 31. It is thus seen that when air is being drawn into the crank case it is being exhausted from the compression cylinder 13′ above the piston 22, and vice versa. I have found that by providing positively driven means for thus controlling the feed of the explosive charge and the feed and exhaust of the cooling air, that the engine operates in a more satisfactory manner than can be accomplished by the number of individual check valves or the like.

I wish it understood that the form of my invention herewith shown and described is to be taken as a preferred example of the same, and that certain changes in the shape, size, and arrangement of parts may be resorted to without departing from the spirit of the invention or the scope of the subjoined claims.

Having thus described my invention, I claim:—

1. In an engine of the character described, an explosion cylinder, a jacket surrounding the same and provided with an air inlet opening, an intermediate outer casing provided with means of communication with the interior of said explosion cylinder, a closed crank case having a port adapted to connect the interior thereof with the interior of said jacket, said intermediate casing having a port leading into the upper portion thereof, a piston operating in the explosion cylinder, an auxiliary piston connected with the first named piston and operating in said intermediate outer casing, a valve provided with a plurality of openings formed therein to coöperate with said ports, a crank shaft, a pitman connecting the crank shaft and first named piston, and means operated by the crank shaft to move said valve.

2. In an engine of the character described, an explosion cylinder, a jacket surrounding the same and provided with an air inlet opening, an intermediate outer casing provided with a conduit having communication with the interior of said explosion cylinder, a compression cylinder disposed within said intermediate outer casing and having the lower end thereof in free communication with said intermediate outer casing, a closed crank case having a port in communication with the interior of said jacket, said compression cylinder having a port to supply air into the upper portion thereof, a rotatable valve provided with openings to coöperate with said ports, a crank shaft, a pitman connected with said crank shaft, a piston operating in the explosion cylinder and connected with said pitman, an auxiliary piston carried by the first named piston and operating in said compression cylinder, and means operated by the crank shaft to rotate the valve.

3. In an engine of the character described, an explosion cylinder, an intermediate outer casing provided with a conduit having communication with the interior of said explosion cylinder, a compression cylinder having one end in free communication with the outer intermediate casing, a closed crank case having a port for supplying air into the same, said compression cylinder having a port to supply air into one end portion thereof, a movable valve provided with openings to coöperate with said ports, a piston operating in the explosion cylinder, an auxiliary piston carried by the first named piston and operating in said compression cylinder, a crank shaft, a pitman connecting the crank shaft and first named piston, and means operated by the crank shaft to move said valve.

4. In an engine of the character described, an explosion cylinder, an intermediate outer casing provided with a conduit having communication with the interior of said explosion cylinder, a compression cylinder having one end thereof in free communication with the outer intermediate casing, a closed crank case having a port for supplying air into the same, a crank case cylinder disposed within said intermediate outer casing, said compression cylinder having a port to supply cooling air into one end thereof, a rotatable valve to coöperate with said ports, a piston operating within the explosion cylinder and crank case cylinder, an auxiliary piston driven by said piston and operating in the compression cylinder, a crank shaft, a pitman connecting the same with the first named cylinder, and suitable driving connecting means between the crank shaft and said rotatable valve

5. In an engine of the character described, an explosion cylinder, an intermediate outer casing having a conduit in communication with the interior of said explosion cylinder, a compression cylinder having one end in communication with the interior of said intermediate outer casing, a crank case connected with said intermediate outer casing, a casting formed upon the crank casing and provided with a carbureting port and a cooling air exhaust port, said casting being provided with a main opening adapted to be placed in communication with a plurality of ports one of which leads into the compression cylinder and the other of which leads into the crank-case, a rotatable valve disposed within the main opening of said casting and provided with means for controlling the communication between the interior of the crank case and the cooling air exhaust port and between the compression chamber and said cooling air exhaust port, said valve being further provided with means for controlling communication between said carbureting port and the intermediate outer casing, a piston operating in the explosion cylinder, an auxiliary piston connected with the first named piston and operating in said compression cylinder, a crank shaft, a pitman connecting the same with the first named piston, and driving connecting means between the crank shaft and rotatable valve.

6. In an engine of the character described, an explosion cylinder, an intermediate outer casing having a gas supply conduit in communication with the interior of said explosion cylinder, a compression cylinder having one end in communication with the interior of said intermediate outer casing, a closed crank case connected with said intermediate outer casing, a housing provided with a carbureting port and a cooling air exhaust port, said housing being provided with a main opening, a valve casing disposed within the main opening and provided with a set of openings adapted when uncovered to establish communication between the interior of the crank case and said cooling air exhaust port, said housing being provided with a cooling air supply port, said valve casing being provided with a set of openings adapted when uncovered to establish communication between the interior of the crank case and said cooling air supply port, said valve casing being provided with a set of openings adapted when uncovered to establish communication between the carbureting port and the interior of said intermediate outer casing, a rotatable valve disposed in the valve casing to cover and uncover the openings, a crank shaft, a pitman connected with the same, a piston operating in the explosion cylinder and connected with the pitman, an auxiliary piston connected with the first named piston and operating in the compression cylinder, and means driven by the crank shaft to operate the rotatable valve.

7. In an engine of the character described, an explosion cylinder, an intermediate outer casing having a conduit in communication with the interior of the explosion cylinder, a compression cylinder having one end in communication with the interior of said intermediate outer casing, a closed crank case connected with said intermediate outer casing, a housing provided with a carbureter air supply port, a port leading to the lower portion of the compression cylinder, a cooling air supply port and a cooling air exhaust port, said housing being also provided with a plurality of cooling air ports, one of which leads into the upper portion of said compression cylinder and the other of which leads into the closed crank-case, said housing being provided with a central opening, a valve casing disposed therein and provided with sets of air openings registering with the cooling air supply port and the ports leading to the upper portion of the compression cylinder and the crank case, a set of carbureter air openings registering with the carbureted air supply port and the port leading to the lower portion of the compression cylinder and sets of cooling air exhaust openings registering with the port leading to the upper portion of the compression cylinder and the crank case and the air exhaust port, a rotatable valve disposed in said valve casing to cover and uncover said sets of openings, a piston operating in the explosion cylinder, an auxiliary piston operating in the compression cylinder to compress the explosive charge on the down stroke and the cooling air on the up stroke, a crank shaft, a pitman connecting the crank shaft and first named piston, and means driven by the crank shaft to rotate the valve.

8. In an engine of the character described, an explosion cylinder; an intermediate outer casing having a conduit in communication with the interior of said explosion cylinder; a compression cylinder having one end in communication with said intermediate outer casing, a closed crank case; a housing provided with sets of cooling air supply openings for alternately conducting the cooling air to the interior of the compression cylinder and the crank case, sets of cooling air exhaust openings for alternately conducting the cooling air from the compression cylinder and crank case, and a set of gas supply openings for conducting the explosive gas to the compression cylinder; a rotatable valve for covering and uncovering all of the sets of openings; a piston operating in the explosion cylinder; an auxiliary piston connected with the first named piston and operating in the compression cylinder to com-

press the explosive charge on the down stroke and the cooling air on the up stroke, a crank shaft; a pitman connecting the crank shaft with the first named piston; and driving connecting means between the crank shaft and the rotatable valve.

9. In an engine of the character described, an explosion cylinder; an intermediate outer casing having a conduit in communication with the interior of said explosion cylinder; a compression cylinder having one end in communication with said intermediate outer casing; a closed crank case; a housing provided with sets of cooling air supply openings for alternately conducting the cooling air to the interior of the compression cylinder and the crank case, sets of cooling air exhaust openings for alternately conducting the cooling air from the compression cylinder and crank case, and a set of gas supply openings for conducting the explosive gas to the interior of said compression cylinder; a movable valve for covering and uncovering said sets of openings at proper times and in proper order; a piston operating in the explosion cylinder; an auxiliary piston connected with the first named piston and operating in said compression cylinder to compress the explosive charge on the down stroke and the cooling air on the up stroke; a crank shaft; a pitman connecting the crank shaft with the first named portion, and means to move said valve.

In testimony whereof I affix my signature in presence of two witnesses.

CHARLES M. LEECH.

Witnesses:
MELVIN. C. LIGHT,
W. J. RICHIE.