US 20040163282A1

(19) **United States**

(12) **Patent Application Publication** (10) **Pub. No.: US 2004/0163282 A1**

Pan (43) **Pub. Date: Aug. 26, 2004**

(54) **SOLE SLIDE-PROOF DEVICE**

(76) Inventor: **Tang-Ma Pan**, Taipei (TW)

Correspondence Address:
Tang-Ma Pan
235 Chung-Ho
Box 8-24
Taipei (TW)

(21) Appl. No.: **10/410,840**

(22) Filed: **Apr. 11, 2003**

(30) **Foreign Application Priority Data**

Feb. 26, 2003 (TW)..... 92203023

Publication Classification

(51) **Int. Cl.**[7] **A43C 15/00**

(52) **U.S. Cl.** ..... **36/59 R**

(57) **ABSTRACT**

A sole slide-proof device comprises a sole below a shoe body; and a plurality of soft suckers installed below the sole; the sucker being a tapered disk body; and a lower side of the disk body being a concave groove; and an opening of the groove being at a lower side of the sucker. Moreover, a plurality of blocks can be mounted between the sole and the suckers. The suckers have an effect of absorbing the sole to ground so as to have the effect of slide-proof, heat-isolation, and vibration-absorption.

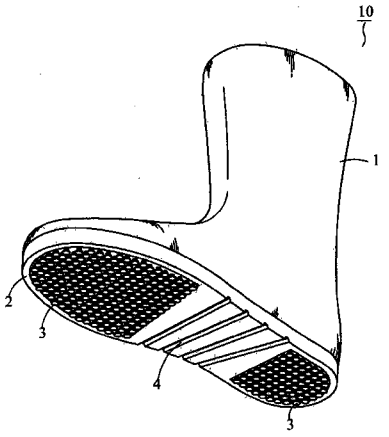

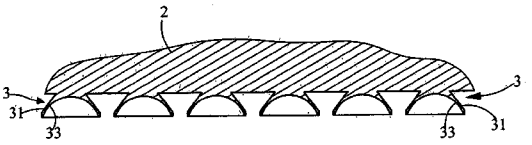

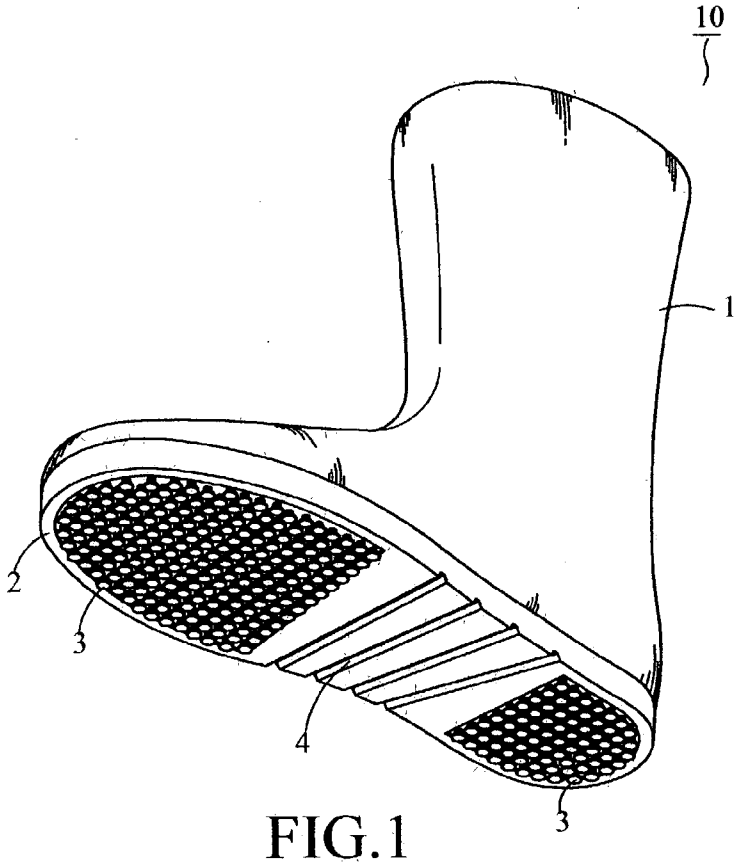

FIG.1

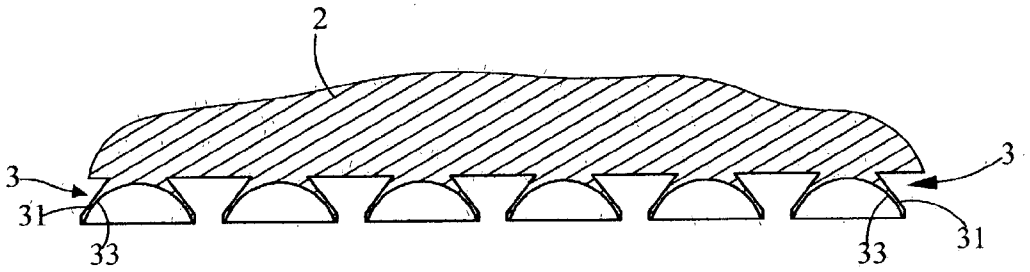

FIG.2A

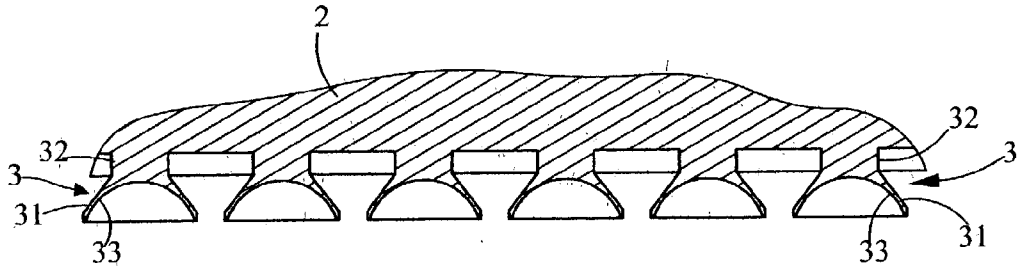

FIG.2B

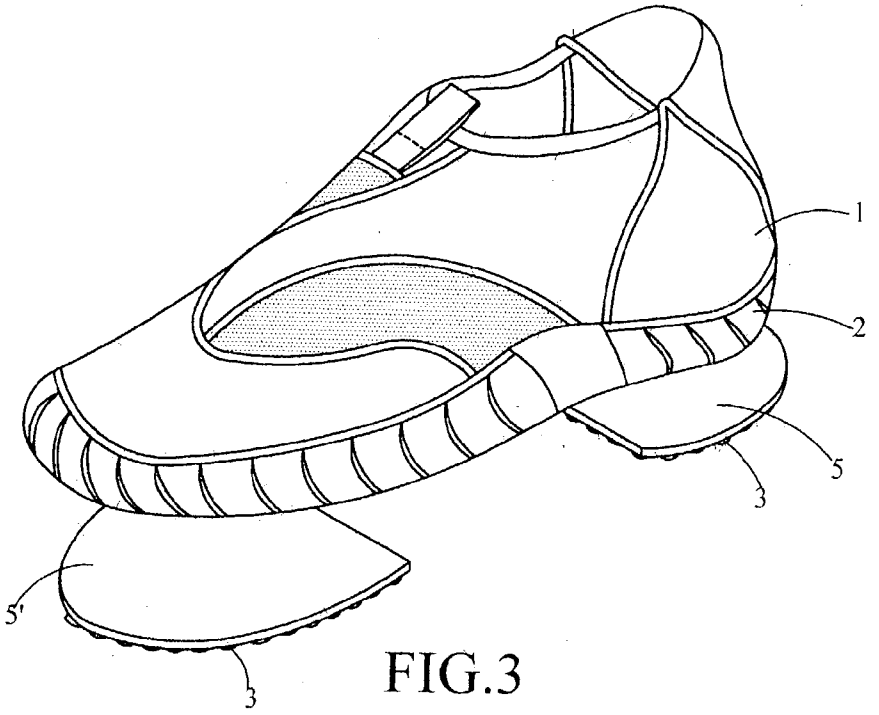

FIG.3

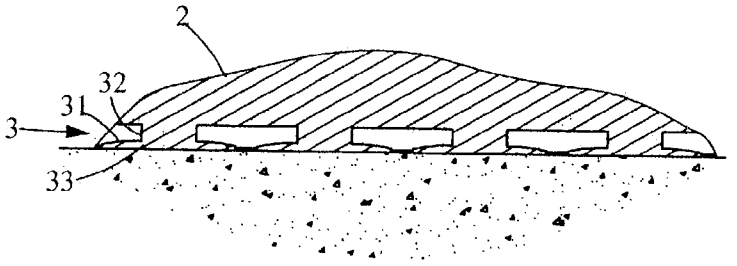

FIG.4

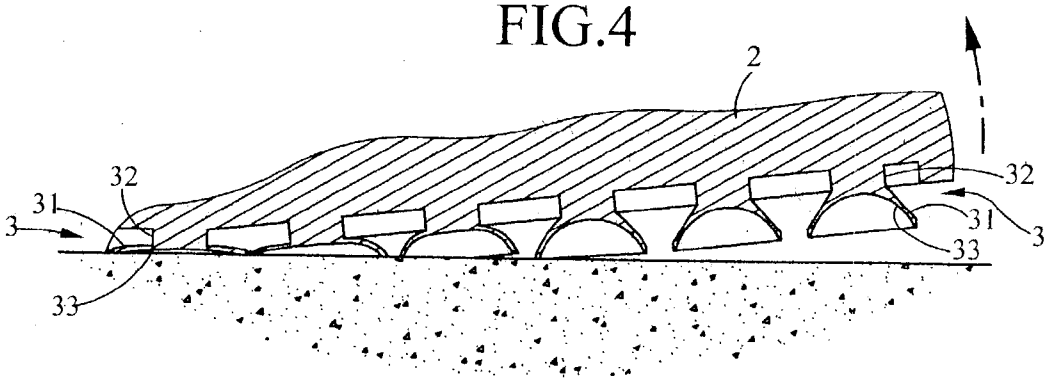

FIG.5

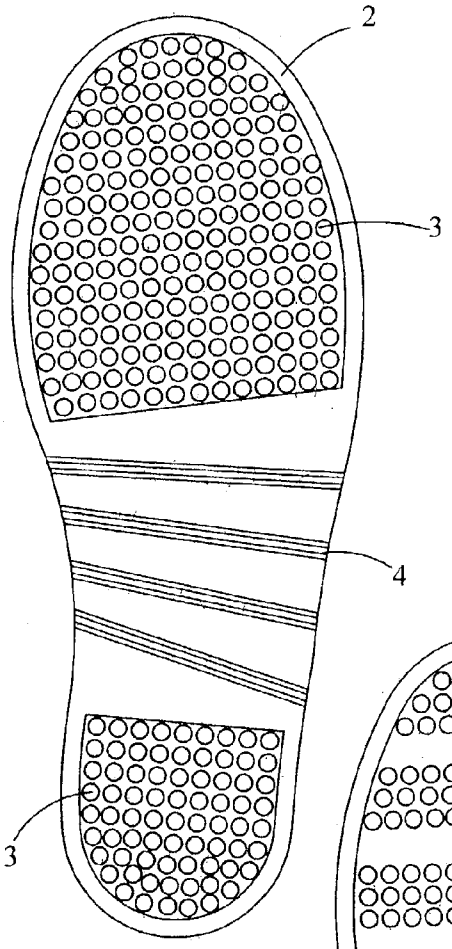

FIG.6

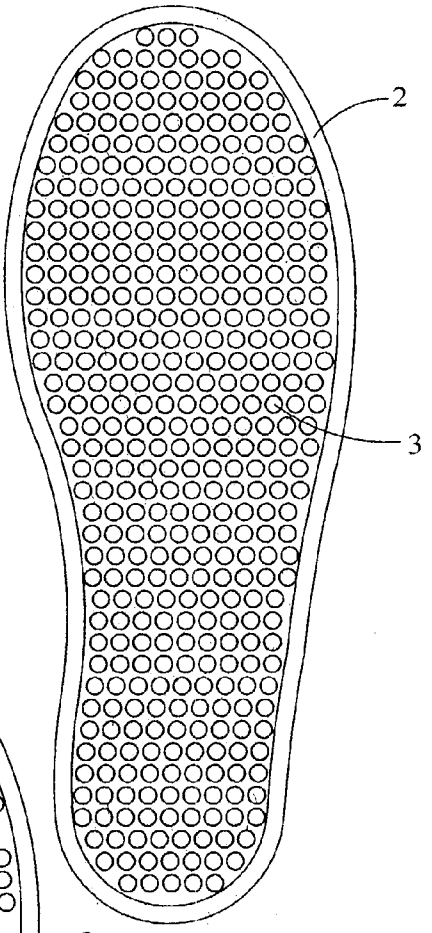

FIG.7

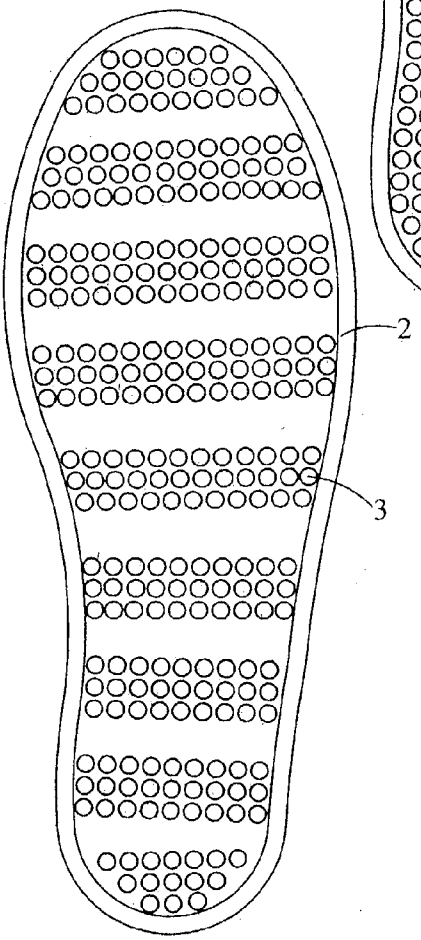

FIG.8

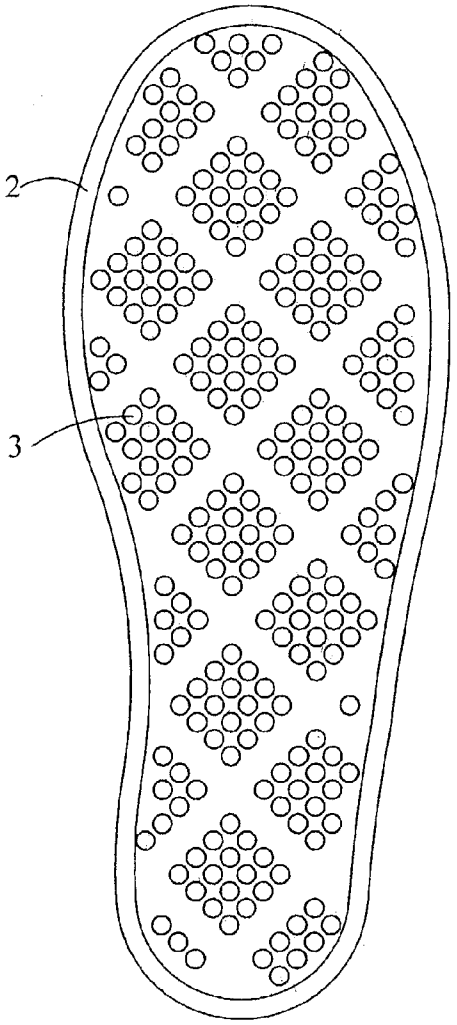

FIG.9

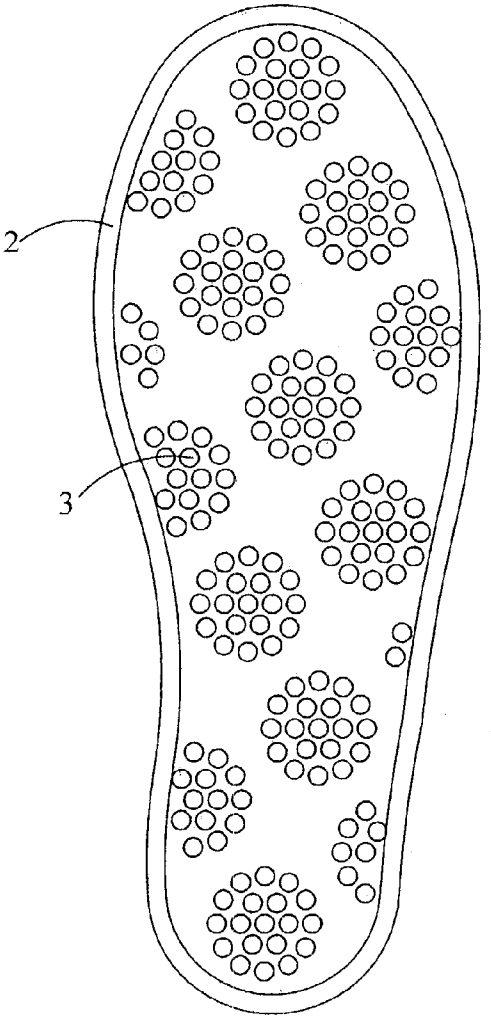

FIG.10

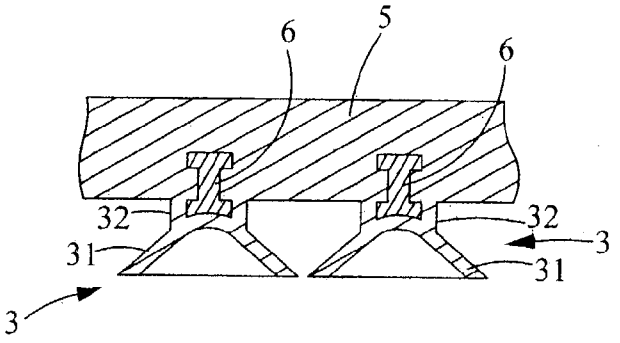

FIG.11

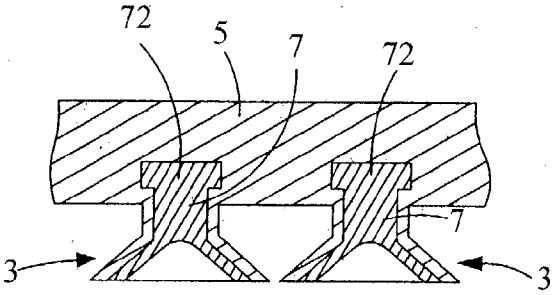

FIG.12

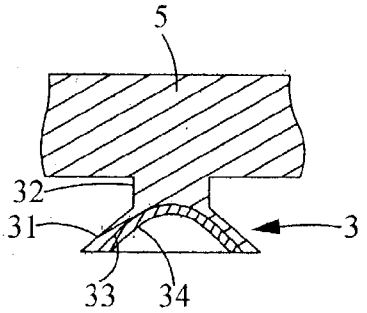

FIG.13

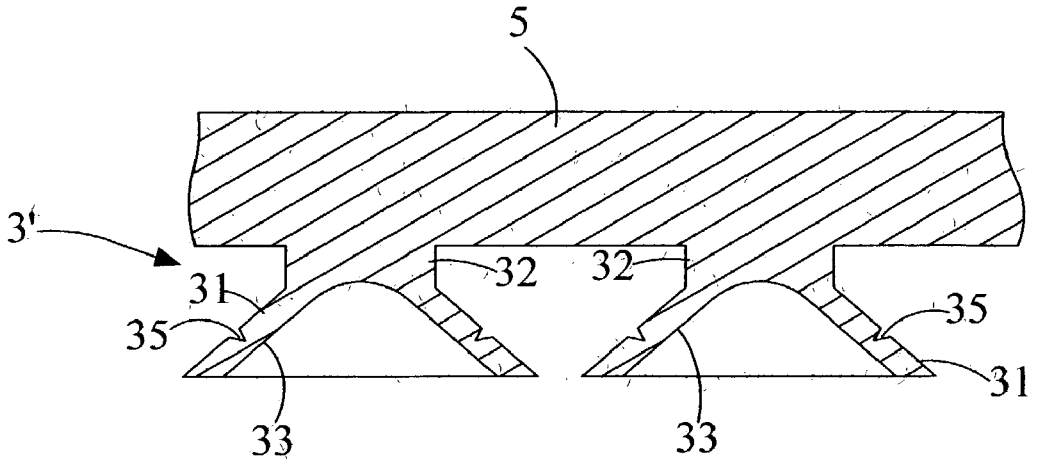

FIG.14

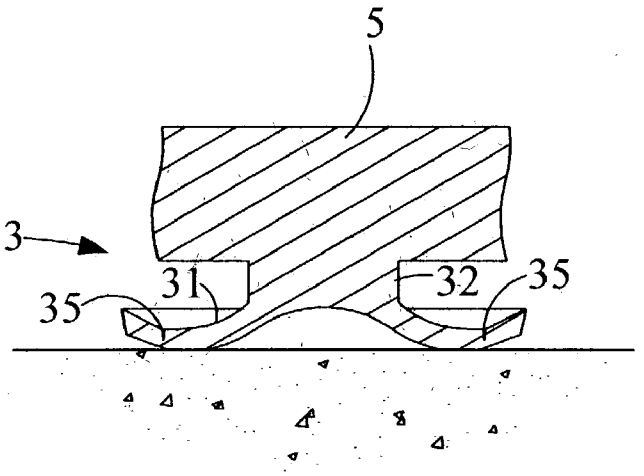

FIG.15

SOLE SLIDE-PROOF DEVICE

FIELD OF THE INVENTION

[0001] The present invention relates to sole slide-proof devices, and particularly to a sole slide-proof device which is suitable for a variety of shoes, such as rubber shoes, sports shoes, working shoes, etc. The shoes with the sole slide-proof device of the present invention has a better slide-proof effect.

BACKGROUND OF THE INVENTION

[0002] In the prior art sole slide-proof device, the slide-proof shoes are made by adding slide-proof textures, slide-proof blocks, slide-proof particles, or slide-proof nails for enhancing the friction force between the soles and ground so as to prevent the user to slide down to the ground. However these prior art slide-proof structures are not active, that is to say, they can not generate a suction force to the ground. Therefore when the ground is wet, or coated with oil, or has snows or ices, the slide-proof effect cannot be effective. Although slide-proof nails can generate preferred slide-proof effect, but it can not be used to plastic ground and wet concrete ground.

SUMMARY OF THE INVENTION

[0003] Accordingly, the primary object of the present invention is to provide a sole slide-proof device which comprises a sole below a shoe body; and a plurality of soft suckers installed below the sole; the sucker being a tapered disk body; and a lower side of the disk body being a concave groove; and an opening of the groove being at a lower side of the sucker. The suckers have an effect of absorbing the sole to ground so as to have the effect of slide-proof, heat-isolation, and vibration-absorption.

[0004] Another object of the present invention is to provide a sole slide-proof device which comprises a sole below a shoe body; a plurality of blocks below the sole; and a plurality of blocks installed below the blocks; the sucker being a tapered disk body; and a lower side of the disk body being a concave groove; and an opening of the groove being at a lower side of the sucker. The suckers has an effect of absorbing the sole to ground so as to have the effect of slide-proof, heat-isolation, and vibration-absorption.

[0005] The various objects and advantages of the present invention will be more readily understood from the following detailed description when read in conjunction with the appended drawing.

BRIEF DESCRIPTION OF THE DRAWINGS

[0006] **FIG. 1** is a schematic view showing the slide-proof structure of the present invention.

[0007] **FIG. 2A** is a cross section view showing the suckers of the present invention are not in contact with ground.

[0008] **FIG. 2B** is a cross section view showing another suckers of the present invention which are not in contact with ground.

[0009] **FIG. 3** is a schematic view of one slide-proof structure of the present invention.

[0010] **FIG. 4** is a schematic cross section view showing the contact of the small suckers **3** with a ground.

[0011] **FIG. 5** is a cross section view showing that the small suckers of the present invention separate from ground.

[0012] **FIG. 6** is a schematic view showing a first distribution of the suckers of the present invention.

[0013] **FIG. 7** is a schematic view showing a second distribution of the suckers of the present invention.

[0014] **FIG. 8** is a schematic view showing a third distribution of the suckers of the present invention.

[0015] **FIG. 9** is a schematic view showing a fourth distribution of the suckers of the present invention.

[0016] **FIG. 10** is a schematic view showing a fifth distribution of the suckers of the present invention.

[0017] **FIG. 11** is a cross section view of another embodiment of the sucker of the present invention.

[0018] **FIG. 12** is a cross section view of a further embodiment of the sucker of the present invention.

[0019] **FIG. 13** is a cross section view of a yet embodiment of the sucker of the present invention.

[0020] **FIG. 14** is a cross section view about the embodiment of large sucker of the present invention.

[0021] **FIG. 15** is a schematic view that the large sucker has in contact with ground according to the present invention.

BRIEF DESCRIPTION OF THE PREFERRED EMBODIMENTS

[0022] Referring to **FIG. 1**, the sole slide-proof device of the present invention is illustrated. A shoe **10** is formed by a shoe body **1** and a sole **2**. A plurality of soft small suckers **3** are mounted to the sole **2** The small suckers **3** are distributed on a front and a rear ends of the sole **2**, or on the front, middle and rear ends of the sole **2**, or on the front end of the sole **2**, or on the rear end of the sole **2**, or on the whole sole **2**. The small suckers **3** of the present invention can be used with a prior art sole slide-proof device to be installed on the sole **2**, the prior art sole slide-proof device is such as one of slide-proof texture, slide-proof blocks, slide-proof nails, etc. In the present invention, the slide-proof texture **4** is illustrated as one example. In the drawing, the texture is at a middle section of the sole **2**, but this is only one example, other way is permissible, which is not confined by this example.

[0023] The structure of the soft small suckers **3** is illustrated in **FIG. 2A**. A taper disk body **31** is integrally formed with the sole **2**. A lower side of the disk body **31** is a concave groove **33** with a larger opening at a lower side. The structure of the small sucker **3** is illustrated in **FIG. 2B**. A cylindrical neck **32** is installed between the upper end of the small sucker **3** and the sole **2**. The cylindrical neck **31** extends from an upper center of the small sucker **3** so as to generate the effects of buffering and vibration-absorption. Moreover, when a pressure is applied to the small sucker **3**, the small sucker **3** can expand easily.

[0024] In above structure, the small suckers **3** are integrally formed with the sole **2**. However the embodiment of

FIG. 3 can be used. That is, the small sucker **3** is integrally connected with the block **5** and block **5'** and the block **5** and block **5'** are connected to the sole **2**. In the present invention, the shoe body **1** and the sole **2** may be made by other material other than rubber.

[**0025**] Moreover, the soft small sucker **3** may be made of silicone, rubber, plastics other the combination of above materials. Further the diameter of the small sucker **3** is below 15 mm, preferably, below 10 mm. Moreover, the diameter of the disk body **31** is 8 mm, and the diameter of the cylindrical neck **32** is 5 mm. The height of the small sucker **3** is smaller than 7 mm, preferably, smaller than 5 mm. For example, the height of the disk body **31** is 2.5 mm and the height of the cylindrical neck **32** is 1.5 mm. Thereby, the height of the whole small sucker **3** is 4 mm.

[**0026**] **FIG. 4** is a schematic cross section view showing the contact of the small suckers **3** with a ground surface. It is illustrated that as a great pressure is applied to the small suckers **3**, the small suckers **3** will flatten so that air in the concave grooves **33** will be released out. Then a vacuum is formed so that the sole **2** will be adsorbed by ground tightly to generate a slide-proof effect. Moreover, the small suckers **3** isolates the sole **2** and the ground, the heat will not transfer from the sole **2** to the ground to retain the temperature of the shoe. Thereby, the cylindrical necks **32** have the functions of buffering and vibration-absorption.

[**0027**] **FIG. 5** is a cross section view showing that the small suckers of the present invention separate from ground. When the heel is lifted, the small suckers **3** at the rear end of the sole **2** will leave the ground at first, and small suckers **3** on the middle section of the sole **2** and then the small suckers **3** on the front end of the sole **2** leaves the ground. Thereby, by the action of the heel, the small suckers **3** can leave the ground easily.

[**0028**] Besides, the small suckers **3** have an effect better than installing a plurality of large suckers **3'** on the sole **2** since the small suckers **3** can leave ground easily. More small suckers **3** have the effect of slide-proof. In the following a preferred embodiment of the present invention about this will be described with reference to FIGS. **6** to **10**.

[**0029**] In **FIG. 6**, it is illustrated that the front and rear ends of the sole **2** are arranged with small suckers **3**. In **FIG. 7**, the whole surface of the sole **2** is arranged with small suckers **21**. In **FIGS. 8 and 9**, it is illustrated that the small suckers **3** are partially arranged on the sole **2**.

[**0030**] **FIG. 11** is a schematic view about the small sucker of the present invention. It is illustrated that the cylindrical neck **32** of the small sucker **3** is installed with an enhancing post **6** which can be made of metal, carbon fiber, plastics, etc. The enhancing post **6** has the effect of stabilizing the small sucker **3** so that the small sucker **3** has the effect of anti-pressure.

[**0031**] **FIG. 12** is a schematic view of the small sucker of the present invention. It is illustrated that an enhancing body **7** is installed in the cylindrical neck **31**. The enhancing body **7** has a lower taper piece **72** extending to the disk body **31** and an upper post **71** extending to the sole **2**.

[**0032**] Besides, the small suckers **3** can be made of compound material, such as the mixer of plastics and rubber so as to achieve the effect of wearing-proof. Moreover, a hetero material can be combined to the concave groove **33** of the small sucker **3**, such as the emulsion layer **34** shown in **FIG. 13** for increasing the resistance of the sole **2**.

[**0033**] Besides, in fact, the effect of the small sucker **3** is not so preferred as large sucker **3'**, but in the present invention, a plurality of small suckers **3** are used so as to have a preferred effect than using a few of large suckers **3'**. Moreover, the small suckers **3** can leave ground easily. When the disk **35** of the small sucker **3** is larger than 15 mm and moreover the height is larger than 7 mm to be as a large sucker **3'**, it has a preferred absorbing effect, but it is not ideal when the sucker **3** leaves the ground. To cause that the large sucker **3'** has a better property for leaving from ground, as shown in **FIG. 14**, an edge of the disk body **31** is installed with the annular concave disk **35**. Thereby, when the large sucker **3'** is pressed, the annular concave disk **35** will curl so that air can easily flow in the concave groove **33**. Thus the sole **2** can leave the ground easily.

[**0034**] The present invention is thus described, it will be obvious that the same may be varied in many ways. Such variations are not to be regarded as a departure from the spirit and scope of the present invention, and all such modifications as would be obvious to one skilled in the art are intended to be included within the scope of the following claims.

What is claimed is:

1. A sole slide-proof device comprising:

a sole below a shoe body; and

a plurality of soft suckers installed below the sole; each sucker being a tapered disk body; and a lower side of the disk body being a concave groove; and an opening of the groove being at a lower side of the sucker;

wherein the suckers have an effect of firmly attach the sole to ground so as to have the effect of slide-proof, heat-isolation, and vibration-absorption.

2. The sole slide-proof device as claimed in claim 1, wherein a center of an outer edge of the disk body of the sucker is formed with a cylindrical neck; and the cylindrical neck is connected to the sole.

3. The sole slide-proof device as claimed in claim 1, wherein the suckers are arranged to the sole by one of the ways containing arranged to some parts of the sole and arranged to the whole sole; the suckers are arranged as longitudinal strips, transversal strips, or blocks.

4. The sole slide-proof device as claimed in claim 1, wherein the suckers are used with a sole slide-proof device to be installed on the sole, and the sole slide-proof device is one of slide-proof textures, slide-proof blocks, slide-proof particles, and slide-proof nails.

5. The sole slide-proof device as claimed in claim 1, wherein an enhancing body is installed in each sucker; and the enhancing body has an upper post and a lower tapered piece.

6. The sole slide-proof device as claimed in claim 1, wherein an enhancing post is in the cylindrical neck.

7. The sole slide-proof device as claimed in claim 1, wherein a hetero material is combined to the concave groove of the sucker for increasing the resistance of the sole.

8. The sole slide-proof device as claimed in claim 1, wherein an edge of the disk body is installed with an annular

concave disk; thereby, when the large sucker is pressed, the annular concave disk will curl.

9. A sole slide-proof device comprising:

a sole below a shoe body;

a plurality of blocks below the sole; and

a plurality of blocks installed below the blocks; the sucker being a tapered disk body; and a lower side of the disk body being a concave groove; and an opening of the groove being at a lower side of the sucker;

wherein the suckers have an effect of absorbing the sole to ground so as to have the effect of slide-proof, heat-isolation, and vibration-absorption.

10. The sole slide-proof device as claimed in claim 9, wherein a center of an outer edge of the disk body of the sucker is formed with a cylindrical neck; and the cylindrical neck is connected to the block.

11. The sole slide-proof device as claimed in claim 9, wherein the suckers are arranged to the sole by one way selected from a group containing: arranging the suckers to some parts of the sole and arranged to a whole sole; the suckers are arranged as longitudinal strips, transversal strips, or alternatively arranged longitudinal strips and transversal strips.

12. The sole slide-proof device as claimed in claim 9, wherein the suckers are used with one of slide-proof textures, slide-proof blocks, slide-proof particles, and slide-proof nails so as to be installed below the blocks.

13. The sole slide-proof device as claimed in claim 9, wherein an enhancing body is installed in each sucker; and the enhancing body has an upper post and a lower tapered piece.

14. The sole slide-proof device as claimed in claim 9, wherein an enhancing post is in the cylindrical neck.

15. The sole slide-proof device as claimed in claim 9, wherein a hetero material is combined to the concave groove of the sucker for increasing the resistance of the sole.

16. The sole slide-proof device as claimed in claim 9, wherein an edge of the disk body is installed with an annular concave disk; thereby, when the large sucker is pressed, the annular concave disk will curl.

* * * * *