March 29, 1938. R. W. WILSON 2,112,548

CLOSURE FOR CONTAINERS

Filed Jan. 29, 1937 2 Sheets-Sheet 1

Fig. 1

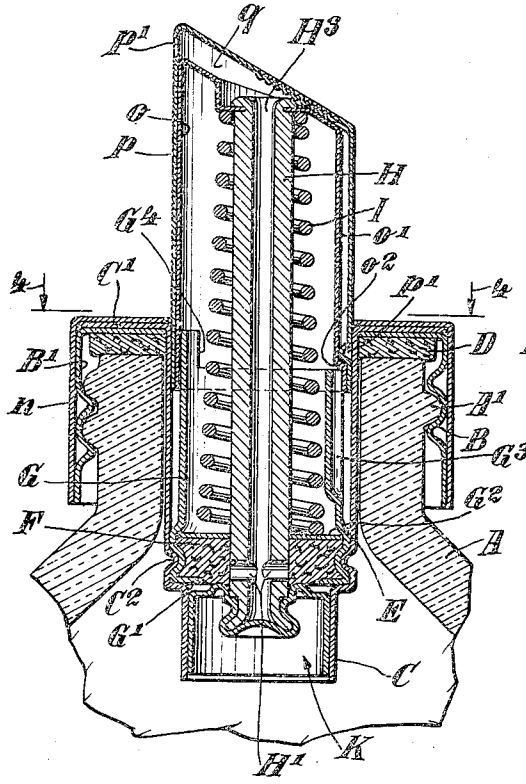

Fig. 2

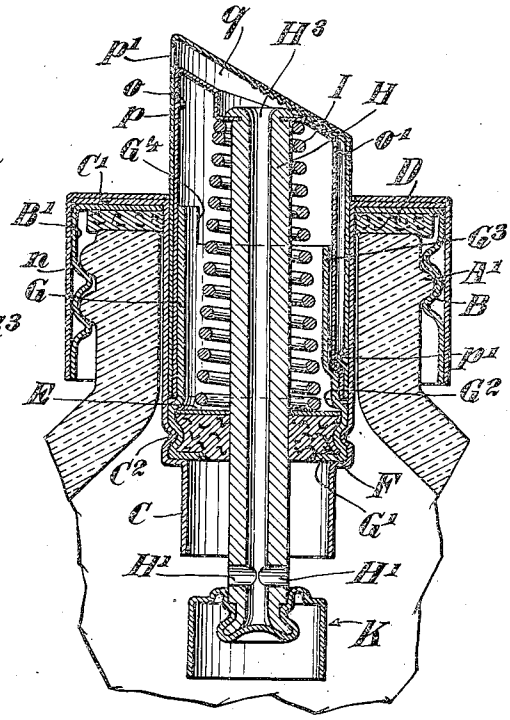

Fig. 3

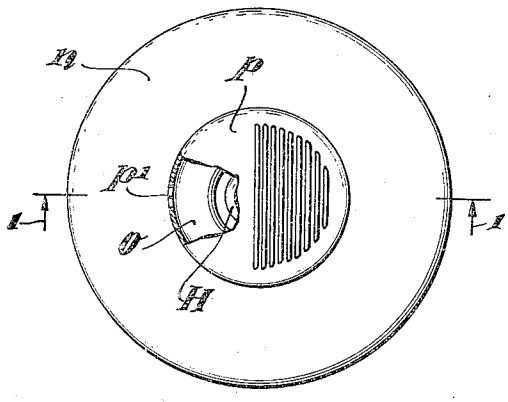

Fig. 4

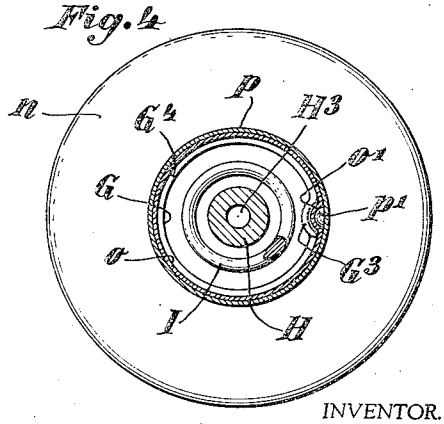

INVENTOR.
Ralph W. Wilson,
BY Hoguet, Neary & Campbell,
His ATTORNEYS

March 29, 1938. R. W. WILSON 2,112,548

CLOSURE FOR CONTAINERS

Filed Jan. 29, 1937 2 Sheets-Sheet 2

Fig. 5

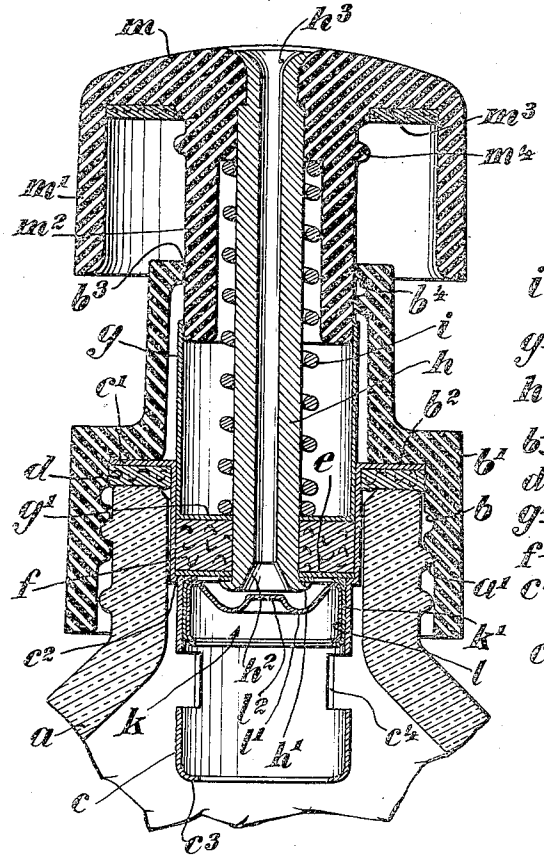

Fig. 6

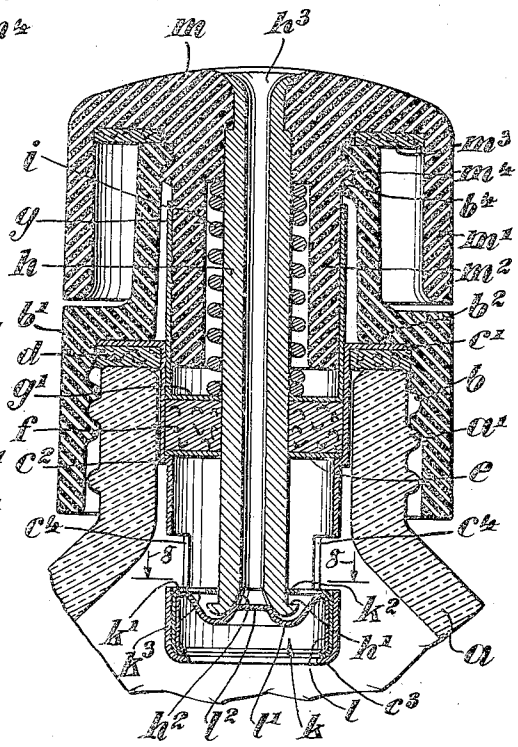

Fig. 7

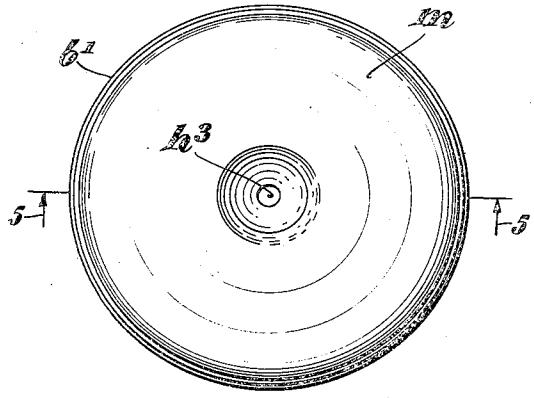

Fig. 8

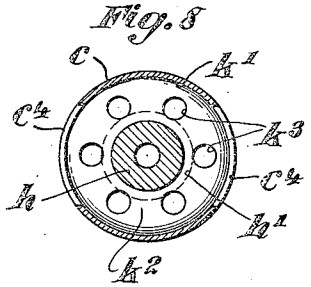

INVENTOR.
Ralph W. Wilson,
BY Paget, Neary & Campbell,
HIS ATTORNEYS

Patented Mar. 29, 1938 2,112,548

UNITED STATES PATENT OFFICE

2,112,548

CLOSURE FOR CONTAINERS

Ralph W. Wilson, New York, N. Y.

Application January 29, 1937, Serial No. 122,903

7 Claims. (Cl. 221—147)

In an application filed by the present applicant on February 25, 1936, Serial No. 65,541 there is disclosed a closure especially adapted for use on containers for liquid or viscous cosmetic preparations which is characterized by means for the positive expulsion of material in predetermined quantities. The present invention relates to improvements on the construction of the device disclosed in said application tending towards simplicity in design and assembly, cheapness in cost and certainty and convenience in use.

The principal object of the present invention is to provide improved means for maintaining the operative parts in the most favorable relationship during non-use of the closure to the end that accidental leakage of material is effectively prevented. In accordance with the invention the means for maintaining the parts in predetermined sealed relation during non-use are positive in character but readily operable to facilitate the dispensing of liquid or, in the alternative, to lock them against dispensing and leakage.

A further object of the invention is to provide a cylinder of non-yielding material and a piston of non-yielding material reciprocable therein with a hollow dispensing stem for the positive expulsion of a predetermined quantity of liquid and also to provide in association with such elements means whereby the hollow stem is effectively sealed when in non-use from the entry of liquid, as by leakage or otherwise.

A further object is to provide in one embodiment of the invention means for locking the dispensing piston when in non-use at the inner end of the cylinder whereby upon release of the locking means the piston will immediately be moved forwardly under the influence of the power spring to discharge the liquid. This relationship of parts results in a more compact container of minimum over-all length when not in use.

A further object in a dispensing closure of the character indicated is to provide a floating piston that has predetermined limited relative movement with relation to the hollow dispensing stem so as to permit the expulsion of material therethrough when the piston moves in one direction while permitting a sealing engagement between the stem and the piston when the latter is moved in the opposite direction. By this relation the piston itself serves as the sealing means for the hollow dispensing stem.

These and other objects and purposes of the invention will appear more fully in connection with the detailed description of the illustrated embodiments shown in the drawings, in which:

Figure 1 is a view in vertical section through a dispensing closure embodying the present inventions and improvements, a fragment of the container being indicated, the section being taken on the line 1—1 of Figure 3 and looking in the direction of the arrows.

Figure 2 is a view in vertical section showing the parts illustrated in Figure 1 and with the piston forced inwardly ready for expulsion of material from the cylinder upon outward movement.

Figure 3 is a view in plan of the closure illustrated in Figures 1 and 2, part of the outer shell being broken away.

Figure 4 is a view in horizontal section through the closure shown in Figure 1 and taken on the plane indicated by the line 4—4 and looking in the direction of the arrows.

Figure 5 is a view in vertical section through a closure having generally similar parts to those shown in Figure 1 but embodying certain modifications, the view being taken on the plane indicated by the line 5—5 of Figure 7 and looking in the direction of the arrows.

Figure 6 is a view similar to Figure 5 but showing the parts of the closure locked against relative movement as is their relation during non-use.

Figure 7 is a view in plan of the closure illustrated in Figure 5.

Figure 8 is a horizontal sectional view through the cylinder illustrated in Figure 6 and taken on the plane indicated by the line 8—8 and looking in the direction of the arrows.

Referring first to the embodiment shown in Figures 1–4, the neck of the container A has threads A′ thereon with which engage the threads B of an inner cap B′. The inner cap clamps a gasket D on the end of the neck of the container to seal the same. Within the container is disposed a cylinder C at the upper end of which is formed a flange C′ secured between the inner cap B′ and an outer cap *n* which is permanently attached to the inner cap. The parts just described, accordingly, constitute a unitary assembly.

Disposed within the upper portion of the cylinder C and spaced therefrom is a cylindrical guide shell G, the lower end of which is secured to the cylinder as by means of circumferential beading or crimping indicated at C^2. The guide shell G is formed at its lower end with a circular flange G′ which engages a yielding gasket F held in place by a plate E. The shell G is crimped over the plate E to hold it in place on the gasket F, the crimping being illustrated at G^2.

The gasket F and the retaining plate E have

central openings therein through which extends a hollow dispensing stem H. On the lower end of the stem is secured a piston K which fits snugly and reciprocably within the cylinder C. Lateral ducts H′ in the stem H communicate with the central bore H^3 of the stem H. A spring I is interposed operatively between the plate E and the stem H so as to urge the piston K to the inner end of the cylinder C as indicated in Figure 1. When the parts are in this relation the ducts H′ are housed within the gasket F and the accidental discharge or leakage of liquid from the interior of the container through the hollow stem is effectively prevented. However, when the stem is moved inwardly it carries the piston K out of the cylinder C as illustrated in Figure 2, so that liquid may flow into the cylinder when the container is inverted.

At the upper end of the stem H is secured an inner tubular guide shell *o* and to this shell is secured an outer tubular guide shell *p*, the two constituting a unitary structure. The lower end of the skirt of these shells is disposed between the upper portion of the cylinder C and the guide shell G. The spring I seats on the end wall of the inner shell *o*. The assembly thus described is capable of reciprocating movements when depressed against the action of the spring I. The inner and outer shells *o*, *p*, being disposed between the guide shell G and the cylinder C restrained in their movements and guided so that their reciprocation is truly axial along with the stem H which is further guided by the plate E and the gasket F. For convenience in assembly the inner shell *o* is formed with a longitudinally extending groove *o′* at one side thereof, and the outer shell has an inwardly extending dimple *p′* which rests within this groove. The bottom of the groove *o′* terminates in a shoulder o^2. The guide shell G has a longitudinally extending groove G^3 which receives the rib *o′* in nested relation. This relation between the rib *o′* and the groove G^3 holds the shells *o*, *p*, against relative rotation with relation to the guide shell G during reciprocating movements.

The upper end of the guide shell G is cut away through an angle of 180° as indicated at G^4. This cut away edge is normally at such a level that when the piston K is within the cylinder C as shown in Figure 1 the shoulder o^2 at the bottom of the groove *o′* is slightly above this edge. If the parts are to be locked against reciprocating movements it will be evident from Figure 1 that the shells *o* and *p* which are secured together as a unit can be rotated in a counterclockwise direction so as to bring the shoulder o^2 out of line with the guide groove G^3 in the guide shell G. When the shoulder is out of line with this guide groove it will overlie the cut away edge G^4 of the guide shell G and prevent downward movement of the shells *o*, *p*, with the tubular stem H. This is the relation established when the dispensing closure is not in use. Since the ducts H^1 are at that time nested within the sealing gasket F and the piston K is in its uppermost position within the cylinder C, there can be no discharge or leakage of liquid from the container through the dispensing orifice H^3.

It is to be noted that the end walls of the inner and outer shells *o*, *p*, are angularly disposed so as to leave a space *q* therebetween which communicates with the dispensing orifice H^3. The outer shell *p* has in its side wall a dispensing orifice *p′* which communicates with the space *q*. Thus the liquid expelled through the discharge duct H^3 escapes through the side hole *p′* as is convenient in a device of this sort.

In operation, the inner and outer shells *o*, *p*, are rotated in a clockwise direction until the rib *o′* bears against the cut away portion G^4 at the upper end of the guide shell G. In this position the rib is in line with the guide groove G^3. The container may then be inverted and pressure applied to the exterior of the shell *p*, as by the palm of the hand so as to force the stem H inwardly and carry the piston K out of the cylinder C thus admitting liquid into it. The spring I is compressed by this movement. When pressure is relieved on the outer shell *p* the spring urges the parts outwardly. The piston K when it enters the cylinder C forces the liquid positively through the ducts H′ and the central opening H^3 in the stem H so as to expel it through the side hole *p′*. The plunger action is a positive one. A predetermined quantity of liquid equal to the volumetric content of the cylinder C is thus delivered.

As has been pointed out before if the parts are to be locked against such reciprocating movement the shells *o* and *p* are rotated in counterclockwise directions to bring the groove *o′* out of line with the groove G^3 and the shoulder o^2 over the upper edge of the guide shell G.

In the embodiment illustrated in Figures 5–8 there is shown the neck of a container *a* to which is secured the improved assembly as by means of threads *a′* on the neck which engage threads *b* on the cap *b′*. Within the neck is disposed a cylinder *c* at the upper edge of which is formed a circular flange *c′* adapted to be clamped between an interior shoulder b^2 on the cap *b′* and the neck of the container. A yielding gasket *d* is interposed between the flange *c′* and the neck of the container for sealing. The cylinder *c* is formed with an annular shoulder c^2 below the flange *c′* and on this shoulder is seated a circular disk *e* to support a gasket *f*. The gasket is retained in place by means of a cylindrical shell *g* at the lower end of which is a circular flange *g′* overlying the gasket *f* and confining it in place between the plate *e* and the flange *g′*. The shell *g* is secured fixedly in place in the upper end of the cylinder *c* and extends upwardly for a purpose that will be later described.

The disk *e*, gasket *f* and flange *g′* are formed with central openings to receive a reciprocable hollow stem *h* through which liquid can be expelled. The stem *h* is urged outwardly by a spiral spring *i* which encircles it and seats on the flange *g′*.

The inner end of the hollow stem is engaged with a piston represented generally at *k*. This piston fits snugly within the lower end of the cylinder *c* and is capable of reciprocating movements therein to expel the liquid positively through the hollow stem. In the preferred form of piston construction there is provided an outer circular member *k′* which is formed with a flat end wall k^2 having perforations k^3 therein through which the liquid can flow. The end portion k^2 of the piston has a circular opening therein to receive the hollow stem *h* with capacity for relative movement between the stem and the piston. The inner end of the stem has a circular shoulder *h′* which engages the end wall k^2 of the shell *k′*, when the piston is at the upper end of the cylinder as shown in Figure 1. Movement of the piston under the influence of the spring *i* is positively limited by the disk e^2. The pressure of the spring *i* on the stem *h* causes the shoulder *h′* to

seat on the inner face of the end wall k^2 of the piston when the parts are in this position. Within the outer piston shell k' is secured an inner shell l which has an imperforate transverse end wall l' disposed below the bottom end of the stem h. The end wall l' is formed centrally in cross section as a truncated cone l^2 and the stem h is formed at its lower end with a tapered mouth h^2. The shape and size of the tapered mouth h^2 and the tapered section l^2 are substantially the same so that the conical section is free to seat within the flaring mouth so intimately as to cut off the flow of liquid into the dispensing stem h when the piston is in the lower end of the cylinder c, as illustrated in Figure 6. Viewing the positions of the piston in Figures 5 and 6 it will be seen that the stem can move axially with relation to the piston from the end wall k^2 to the end wall l' when the stem is urged into the container against the action of the spring i.

On the outer end of the stem h is secured a cap m which has a peripheral depending skirt m'. Centrally of the cap there is formed a depending tubular skirt m^2, the lower end of which extends into the guide shell g. The upper end of the cap b' has a central opening b^3 to receive and guide the depending skirt m^2 of the cap m. The depending skirt m^2 has a central bore which is of such size as to receive the spring i so that the spring can seat at the bottom of this bore on the interior of the cap m. Thus it will be seen that the action of the spring is to urge the cap m outwardly together with the stem h. The stem extends through the cap m and has a discharge orifice h^3 at its outer end through which liquid may flow.

From the aforegoing description of the structure of the associated elements the operation can now be understood.

With the parts shown in Figure 5 in which the piston k is seated on the disk e material on the interior of the container is occluded by the piston from the hollow stem h so that none can escape. With the container inverted pressure may be applied to the cap m, as by the palm of the hand, so as to force it inwardly together with the stem h against the action of the spring i. The first movement of the stem will carry it from engagement with the end wall k^2 of the shell of the piston into engagement with the central tapered portion l^2 of the shell l of the piston. In this relation a seal is established which will exclude the passage of material into the stem. Continued movement of the stem inwardly will force the piston to the lower end of the cylinder c. This movement is positively arrested in the embodiment illustrated by two stops. One is provided by a flange c^3 at the lower end of the cylinder which is engaged by the piston when it reaches the end of its travel. Another is provided by engagement of the cap m with the upper end of the cap b'. A resilient gasket m^3 may be secured within the cap m so as to engage the upper end of the cap b' as illustrated in Figure 6, when the piston has traveled the desired predetermined distance.

The relation of parts is shown in Figure 6 when the piston is at the extreme end of its travel. In this position with the container inverted liquid may flow through ports c^4 in the wall of the cylinder to the interior of the cylinder. When pressure on the cap m is released the spring i will drive the stem h outwardly until the shoulder h' engages the end plate k^2 of the piston and picks it up. Thereafter, pressure of the spring will be impressed on the piston and it will be urged inwardly. The pressure of the piston on the liquid entrapped within the cylinder c will positively cause the expulsion of the liquid through the only available channel of escape which is the opening through the stem h. Thus the liquid will be quickly and positively expelled. When the piston is forced to its extreme position within the cylinder c and the inner end of the cylinder filled with liquid it is evident that a predetermined quantity of liquid measured by the volumetric content of the cylinder will be expelled. Less than that maximum quantity can obviously be expelled by a circular movement of the piston and the admission of less liquid into the inner end of the cylinder.

In the inward movement of the cap m it will be guided by engagement of the inner tubular skirt m^2 with the central opening in the cap b' and its engagement within the guide shell g as clearly appears from Figures 5 and 6.

One feature of the improvement resides in the inclusion of means for locking the parts in inoperative relation when the cap m is intimately nested with the cap b' as shown in Figure 6. Since such a locking is provided for when the closure is not in use it is obviously essential that leakage of the material through the hollow dispensing stem h shall be prevented. This function is served by the engagement of the tapered bore h^2 at the lower end of the stem h with the coacting central tapered portion l^2 on the piston shell. This engagement affords a satisfactory valve seat which will prevent leakage. At that time the piston shell is seated on the flange c^3 of the cylinder and can move no further and the stem h is urged into seating engagement with the tapered portion l^2 of the piston. The parts are locked in this relation by means of coacting threads m^4 on the exterior of the tubular skirt m^2 of the cap m and threads b^4 on the interior of the tubular portion of the upwardly extending cap b'. Engagement of the threads is effected by rotation of the cap m. The threads are steep so comparatively little rotating movement is required for the purpose. Conversely, disengagement can be readily effected by opposite rotation.

It will be apparent to one skilled in the art that changes in relationship and construction may be made without departing from the functional cooperation of the elements disclosed.

I claim:

1. In a dispensing closure for liquid containers, an open ended cylinder of rigid material extending into the container and having a supporting shell terminating in a peripheral flange, a cap engaged with the container and with said flange to clamp the cylinder rigidly within the container, a yielding gasket carried within the said supporting shell for the cylinder to seal the cylinder, a reciprocable plunger extending through said gasket and having a dispensing orifice therethrough, a piston engaged with the plunger and mounted reciprocably within the cylinder, movement of the plunger into the container serving to move the piston within the cylinder and admit liquid thereto and movement of the piston in the opposite direction serving to force the entrapped liquid through the dispensing orifice and prevent the admission of any additional liquid from the container into the cylinder.

2. A dispensing closure of the character described comprising an open ended cylinder mounted within a container, a supporting shell for the cylinder, a sealing gasket mounted in the shell at

one end of the cylinder, a rigid plunger extending through said gasket and having a dispensing orifice therethrough, a piston carried on the lower end of the plunger and movable within the cylinder, ports in the plunger communicating with the discharge orifice, said ports being sealed by the gasket when the piston is within the cylinder and receiving liquid when the plunger with the piston is moved inwardly.

3. In a dispensing closure for liquids, a cylinder mounted within the container, a supporting shell for the cylinder, a guide shell supported within the first named shell and having a longitudinal groove formed therein, a reciprocable plunger mounted within said guide shell, a third shell carried on the outer end of the plunger and nested between the first named and the second named shell, a longitudinal rib received within the said longitudinal groove to guide the third named shell in its reciprocating movements with the plunger and a shouldered edge at the outer end of the second named shell for engagement by the end of said guide rib when the plunger is moved angularly to bring the shells into locking relation and hold the plunger against reciprocation.

4. A dispensing closure for liquids including a cylinder mounted within the container, a piston mounted reciprocably within the cylinder, a rigid plunger connected operatively with the piston to cause its reciprocating movements and having a central dispensing opening therethrough whereby liquid from the cylinder may be positively expelled by the piston through said dispensing opening, a guide shell for the plunger carried at its outer end and cooperating with the container to insure truly axial movements of the plunger, an imperforate outer end wall for said shell, a dispensing opening in the side wall of said shell, said opening being in communication with the dispensing orifice within the plunger whereby said dispensing of the liquid is obtained.

5. In a dispensing closure for containers, a cylinder mounted within the container and opened to receive liquid therefrom, a piston disposed reciprocably within the cylinder, a rigid plunger having a dispensing orifice therethrough engaged with the piston to move it into one extreme position within the cylinder and exclude liquid from the cylinder, said plunger being movable relatively to the piston a limited distance for sealing engagement of the dispensing orifice with a portion of the piston to prevent passage of liquid through said orifice.

6. In a dispensing closure, a cylinder mounted within a container, a piston mounted within the cylinder, a rigid plunger having a discharge orifice therethrough engageable with the piston impositively upon movement in one direction or the other whereby the piston is moved in the cylinder and an imperforate cut off portion formed with the piston to cooperate with the discharge orifice when the plunger is moved in one direction and cut off the passage of liquid into the discharge orifice.

7. A dispensing closure for containers including a cylinder extending into the container, a cap engaged with the container to secure the cylinder fixedly in place, a piston mounted reciprocably within the cylinder, a rigid plunger having a dispensing opening therethrough engaged with the piston, a spring to hold the plunger in its outermost position normally, a guide cap carried with the outer end of the plunger whereby pressure may be applied to force the plunger inwardly against the action of the spring, means carried by the piston and engageable by the plunger when the latter is moved inwardly to cause the piston to move in the cylinder and at the same time cut off the flow of liquid from the cylinder into the dispensing orifice and coacting means carried by the first named cap and by the second named cap to secure the plunger in its innermost position of travel whereby accidental discharge of liquid is prevented.

RALPH W. WILSON.