US00D362252S

United States Patent [19]

Ansell et al.

[11] **Patent Number: Des. 362,252**

[45] **Date of Patent: ** Sep. 12, 1995**

[54] **COMPUTERIZED MOBILE TELEPHONE**

[75] Inventors: **Daniel F. Ansell,** Coral Springs; **James D. Childs, Jr.,** Palm Beach Gardens; **Hunter T. Foy; Michael S. Miller,** both of Boca Raton, all of Fla.

[73] Assignee: **International Business Machines Corporation,** Armonk, N.Y.

[**] Term: **14 Years**

[21] Appl. No.: **14,890**

[22] Filed: **Nov. 2, 1993**

[52] **U.S. Cl.** **D14/144;** D14/100; D14/138

[58] **Field of Search** D14/100, 107, 114, 116, D14/118, 137, 138, 140, 142, 144, 147, 148, 240, 248; 379/58–61, 419, 420, 428, 440, 433–436; D18/7; 455/90

[56] **References Cited**

U.S. PATENT DOCUMENTS

D. 300,431	3/1989	Sube et al.	D14/138
D. 305,533	1/1990	Perkins et al.	D14/248 X
D. 309,302	7/1990	Dickson	D14/248 X
D. 325,730	4/1992	van der Zon	D14/248 X
D. 327,064	6/1992	Ditzig et al.	D14/140 X
D. 330,023	10/1992	Kikuchi et al.	D14/138
D. 340,228	10/1993	Clark	D14/100
D. 350,119	8/1994	Kumar et al.	D14/100
D. 351,144	10/1994	Fishbine et al.	D14/100 X
5,265,158	11/1993	Tattari	455/90 X

Primary Examiner—Jeffrey Asch
Attorney, Agent, or Firm—George E. Grosser

[57] **CLAIM**

The ornamental design for a computerized mobile telephone, as shown and described.

DESCRIPTION

FIG. **1** is a bottom, front, left perspective view of a computerized mobile telephone according to the invention;
FIG. **2** is a top, rear, right perspective thereof;
FIG. **3** is a left elevational view thereof;
FIG. **4** is a right elevational view thereof;
FIG. **5** is a front elevational view thereof;
FIG. **6** is a rear elevational view thereof;
FIG. **7** is a bottom plan view thereof; and,
FIG. **8** is a top plan view thereof.

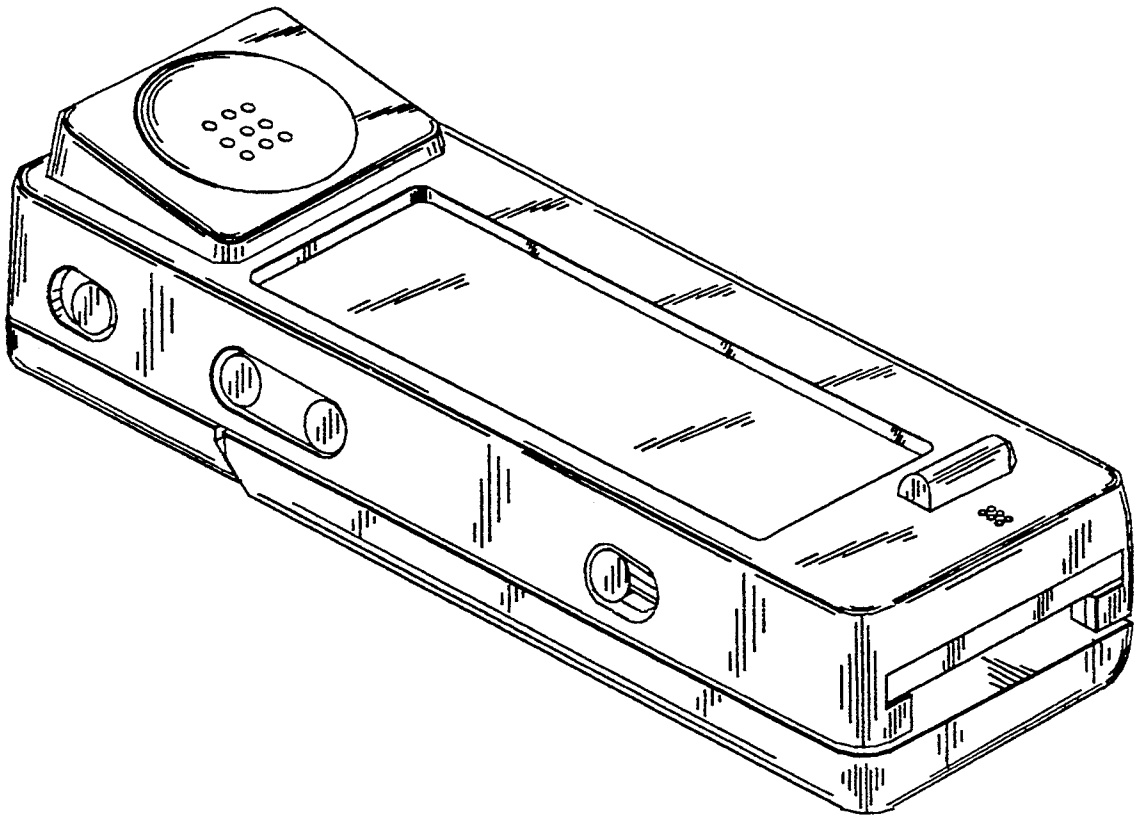

FIG. 1

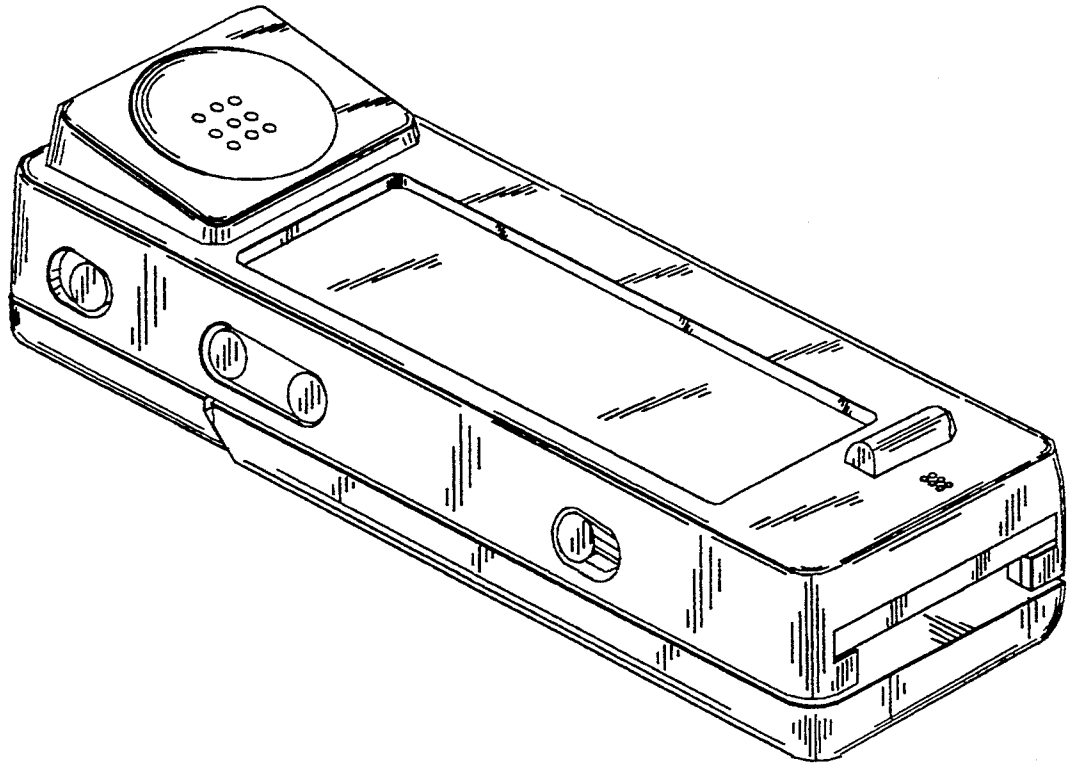

FIG. 2

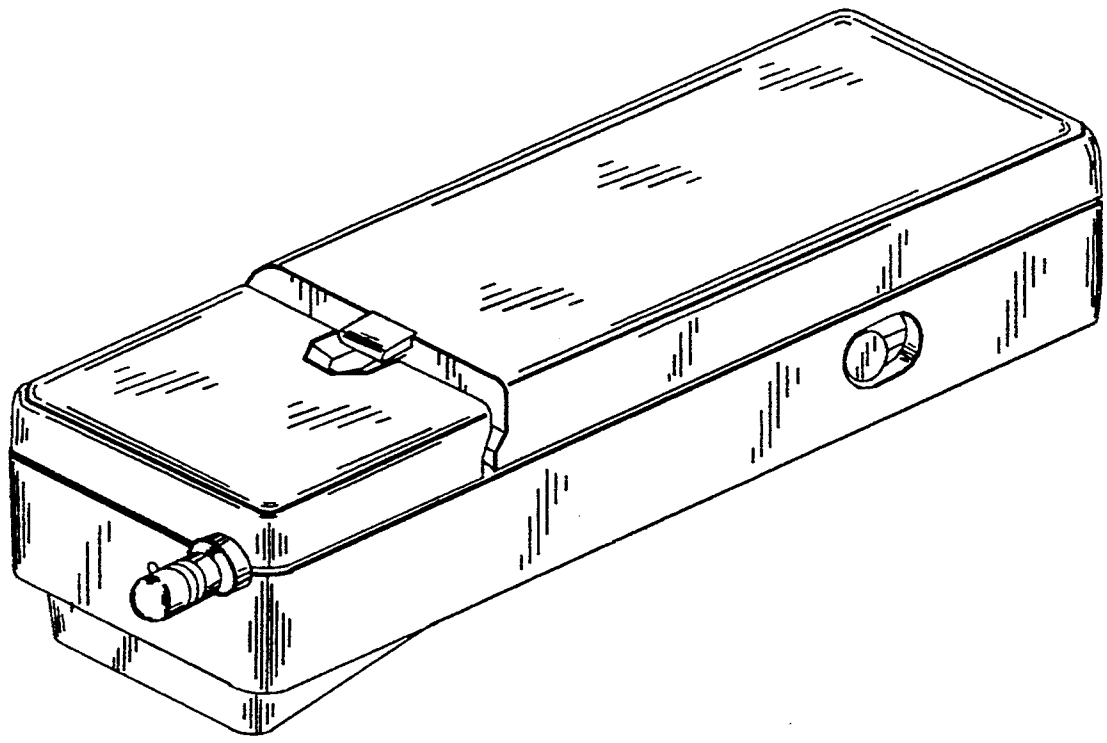

FIG. 3

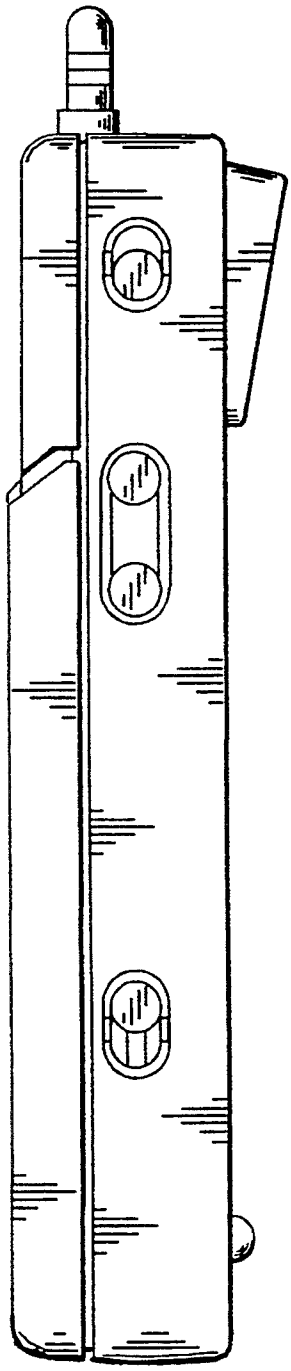

FIG. 4

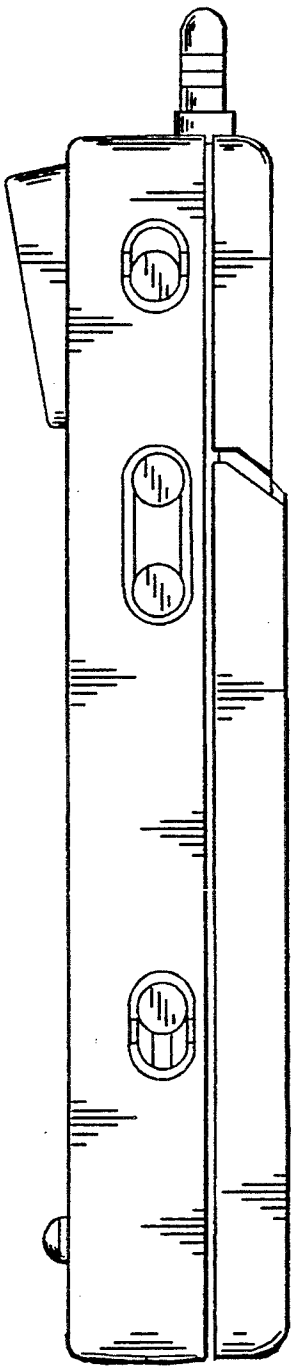

FIG. 5

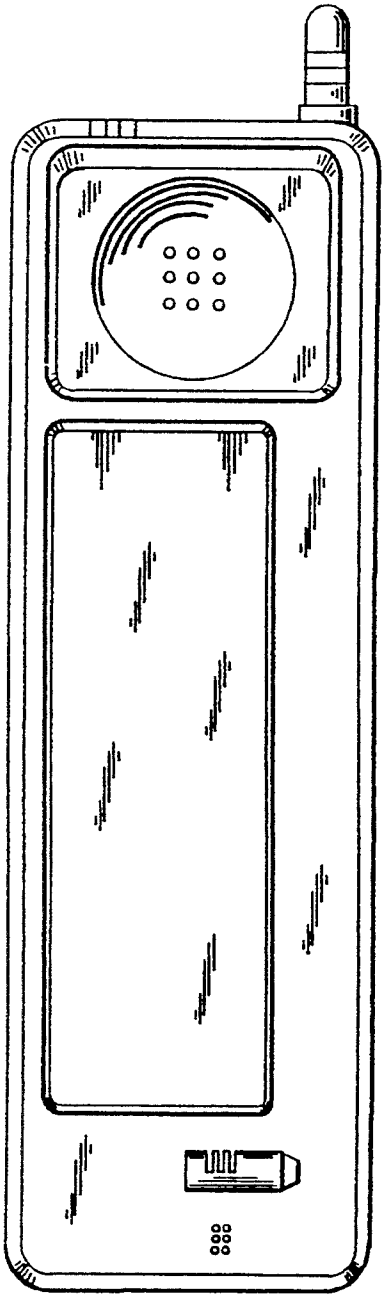

FIG. 6

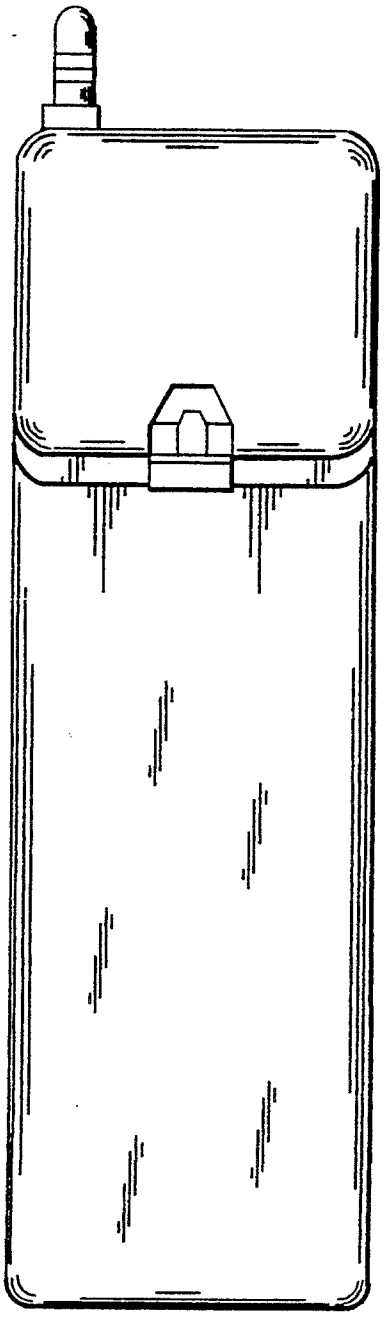

FIG. 7

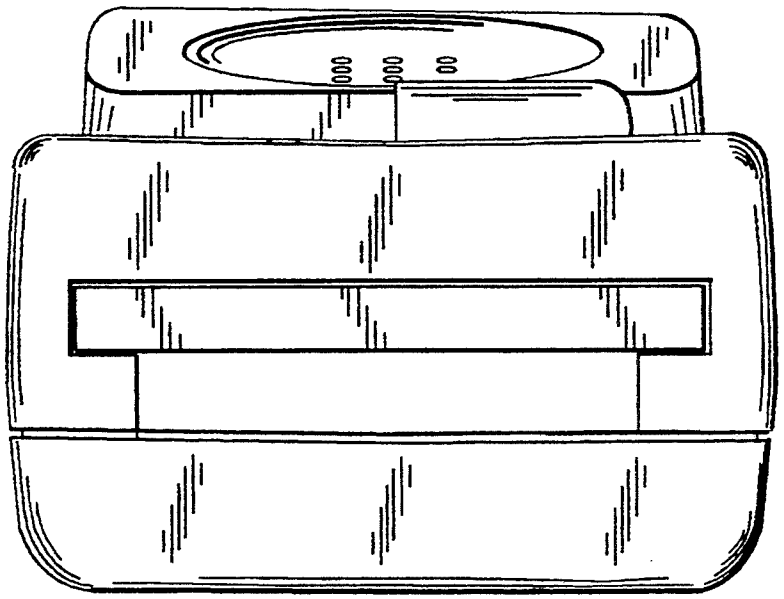

FIG. 8

