Jan. 27, 1942. J. A. GITS 2,271,421

FLASHLIGHT

Filed Jan. 29, 1940

Fig. 1.

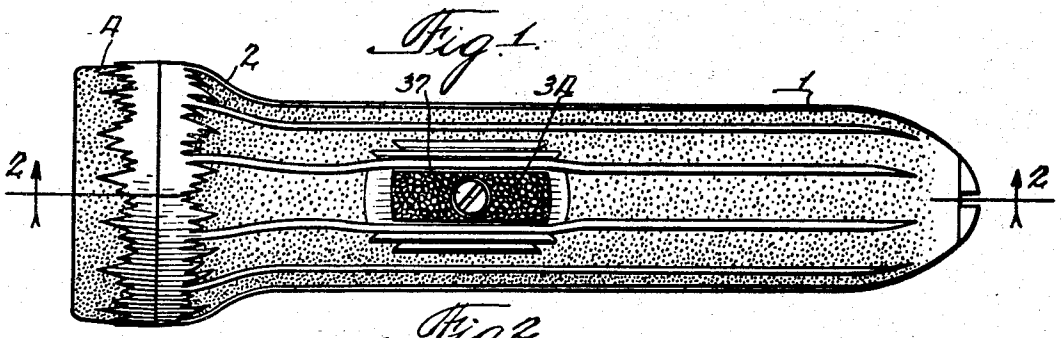

Fig. 2.

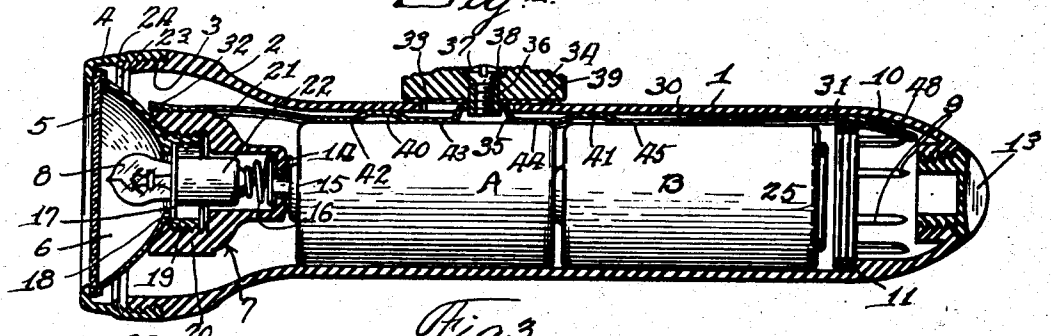

Fig. 3.

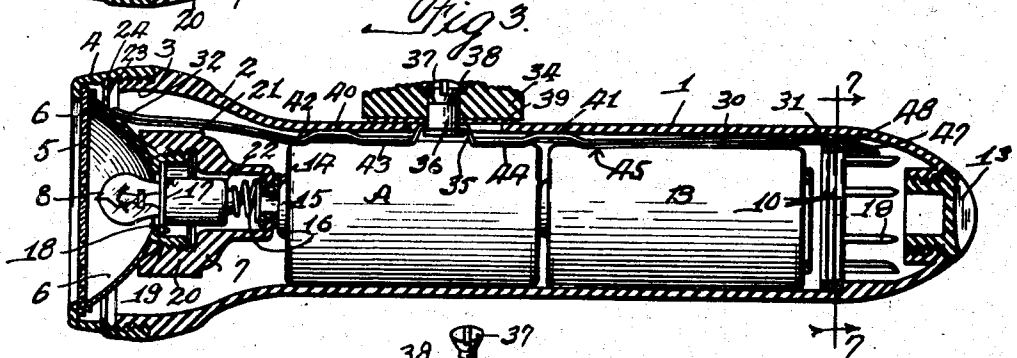

Fig. 4.

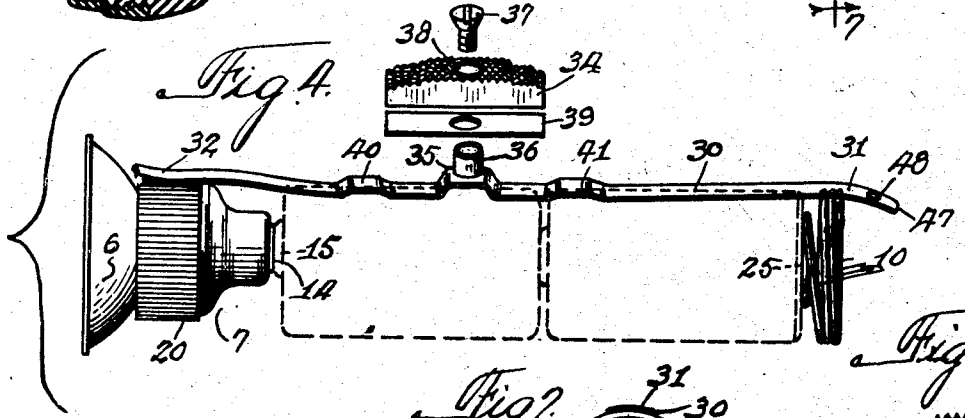

Fig. 5.

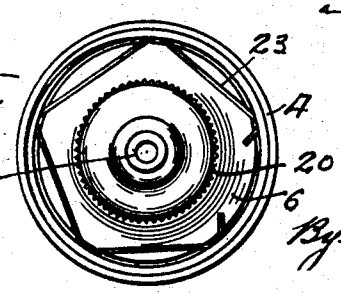

Fig. 7.

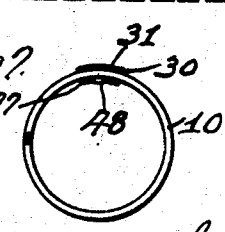

Fig. 6.

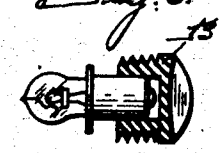

Inventor
Joseph A. Gits.
By: Ames, Thiess, Olson & Mecklenburger
Attys

Patented Jan. 27, 1942 2,271,421

UNITED STATES PATENT OFFICE

2,271,421

FLASHLIGHT

Joseph A. Gits, Chicago, Ill., assignor to Gits Molding Corporation, Chicago, Ill., a corporation of Illinois

Application January 29, 1940, Serial No. 316,122

7 Claims. (Cl. 240—10.66)

This invention relates to a flashlight and more particularly to a new and improved construction of flashlight.

In devices of this type, numerous parts including a switch assembly have heretofore been used to complete the circuit between the battery terminals and the light bulb. The switch was disposed intermediate the ends of the device, either exteriorly upon the shell to be gripped by the user so as to be readily accessible for operation or interiorly within the shell with the handle of the switch protruding. This location of the switch, as well as the use of a separate circuit making and breaking device comprising the assembly, resulted in the employment of numerous intermediate current-conducting parts and end bushings acting as terminal ends, all arranged in a manner to increase cost of manufacture and provide a design that is less reliable in operation and easily apt to become inoperative after use for a short time. On the other hand, the presence of a separate switch structure upon the handle and the requirement of numerous intermediate current-conducting parts presented certain insulation problems between these parts, the batteries and the shell.

An object of the invention resides broadly in providing a new and improved construction of flashlight that provides for a simple, inexpensive and efficient form of structure including preferably a longitudinally disposed contact bar adapted to be slidably operated within and lengthwise of the shell to make and break the circuit at one end and to maintain its circuit relation at the opposite end by the riding engagement whereby the various and numerous current-conducting parts and the switch, heretofore carried by the shell, are eliminated and a more reliable and sturdy device provided.

A further object of the invention resides in the provision of an improved type of handle or shell in connection with the current-carrying parts provided therein whereby the problem of insulation is simplified and a simple, efficient and inexpensive arrangement of parts may be provided.

A further object of the invention resides in providing in combination with the arrangement of parts within, a new and improved form of shell whereby an exceptionally simple design of current-carrying means may be provided between the ends of the device and the usual relatively expensive form of switch carried upon the body eliminated.

A still further object of the invention resides in providing a simple construction involving the employment of an inexpensive form of current-conducting member that may be disposed lengthwise of the device and movable longitudinally whereby a simple form of manually operable actuating means may also be employed to make and break the circuit through a sliding movement of this member lengthwise of the device whereby it will maintain a closed circuit relation at the rear end with a coil spring holding the batteries and bulb assembled in axial alignment, and make and break the circuit at the front end by a sliding engagement with a current-conducting part connected to one side of the bulb. This part is usually the reflector that forms a part of the assembly carrying the bulb and attached to the cap. However, any other part may be used instead in the present construction.

Other objects and advantages of the invention will be apparent from the following detail description taken in connection with the accompanying drawing in which:

Figure 1 illustrates in elevation a flashlight embodying the present invention;

Fig. 2 is a longitudinal section taken on line 2—2 of Fig. 1, the current-carrying parts being in open circuit position;

Fig. 3 is a similar view illustrating these parts in closed circuit position;

Fig. 4 illustrates the parts employed to conduct the current between opposite battery terminals in their assembled relation, this view omitting the shell and cap but showing the manual actuating means in a somewhat exploded position to illustrate its construction and manner of assembly;

Fig. 5 is a view looking into the end cap to show the manner of holding the reflector and light socket assembly therein;

Fig. 6 illustrates the threaded plug carried at the rear or tapered end of the shell carrying an extra light bulb;

Fig. 7 is a detail view with the current conducting member in cross section to illustrate the manner in which it is bowed or curved cross-sectionally to secure a firm surface engagement with the coil spring at the rear end of the shell.

A flashlight embodying the present invention is illustrated in the drawing and comprises an elongated shell 1 flared at the front end as indicated at 2, and threaded at 3 to receive an internally threaded cap 4 adapted to carry a lens 5 and an assembly comprising a reflector 6, a light socket 7 and a bulb 8. It will be understood that shell 1 is elongated to receive one or more batter-

ies arranged therein in stacked relation so that the terminals of the batteries are at or near the opposite ends of shell 1. I do not intend, however, to limit the present disclosure to a flashlight structure that necessarily has the batteries arranged in end to end relation, or requires the use of more than one battery, because it will be apparent at the outset that certain novel features of the invention with respect to the design and arrangement of parts may be used in a flashligh structure employing only one battery or employing batteries of different design that require a different stacking arrangement within shell 1.

Shell 1 is preferably made of insulation material. It is found that thermo-plastic material is very suitable for the purpose. It may be molded in the form shown at low cost, particularly if molded under pressure by injection. Any suitable thermo-plastic material may be used that has suitable insulation qualities. I find that thermo-plastic material has an additional advantage of being somewhat yieldable or resilient so that it will not fracture, chip or be dented when the device is dropped. Cap 4 may be made of the same material. I also find that lens 5 may be made of a transparent thermo-plastic material that has the same index of refraction as glass in order to reduce the possibility of breakage of lens 5 in the event the device is dropped. The method of molding shell 1 is disclosed and claimed in my copending application, Serial No. 350,379, filed August 3, 1940.

At the rear end of this elongated or cylindrical shell, a plurality of ribs 9 is formed upon the inner wall. Ribs 9 act as a seat or stop against which a coil spring 10 abuts. Ribs 9 provide a plurality of shoulders 11 of a dimension adapted to permit coil spring 10 to nest thereagainst so that it will be firmly held in its seated position at this end of shell 1 when the batteries are inserted and cap 4 threaded upon the front end of shell 1 with lens 5 and the reflector and socket assembly in position, as shown in Figs. 1 to 4, inclusive. If desirable, the rear end of shell 1 may have a threaded plug 13 that is readily removable either for the purpose of affording access to the interior of shell 1 at the rear end or for the purpose of carrying an extra light bulb at this end of the shell, as illustrated in Fig. 6.

Any suitable form of reflector 6 and socket 7 may be employed, although I prefer that reflector 6 be somewhat arcuate in shape about its periphery and socket 7 be preferably provided with a terminal 14. Terminal 14 may be formed by riveting a collar or the like, so that its ends form upturned flanges, as shown in Figs. 2 and 3, the outside flange preferably abutting one of the battery terminals 15, while the inside flange may receive one terminal of the circuit of light bulb 8 in current conducting relation as by an interposed coil spring 16. Coil spring 16 exerts pressure axially with respect to bulb 8 so that its flange 17 forming the other side of the light circuit abuts an annular flange 18 of reflector 6. Thus, reflector 6 is placed in the circuit of light bulb 8. Reflector 6 continues in its formation from annular flange 18 in an exteriorly threaded annular extension 19 adapted to be received in a correspondingly threaded head portion 20 of socket 7. Head portion 20 has in effect a chamber 21 which continues inwardly in reduced form to carry shank 22 of bulb 8 and coil spring 16 interposed between bulb 8 and terminal 14. In placing the parts of this assembly together, bulb 8 is inserted into reflector 6 through the rear end until flange 17 abuts seat 18. Socket 7 is then threaded into position upon annular extensions 19, spring 16 being interposed so as to provide good electrical contact between terminal 14 and the end terminal of bulb 8. This reflector and bulb socket assembly is then secured to cap 4 by means of a spring wire 23 shaped in any suitable manner, so that it will properly seat in an annular groove 24 in cap 4. As shown in Fig. 5, portions of the wire will seat in groove 24 and other portions will bear against the outside peripheral surface of reflector 6. In assembling this structure, as above described, lens 5 is first placed into cap 4, so that the reflector and socket assembly holds lens 5 in position.

When batteries designated A and B are arranged in end to end relation, as illustrated in the drawing, the rear battery terminal 25 may comprise the end plate of battery B, as is well known in battery construction of the type disclosed, which terminal 25 will firmly press against coil spring 10 to compress the same and hold it against seat 11. Coil spring 10 may be slightly smaller in diameter than the interior diameter of shell 1.

A longitudinally movable current carrying contact bar 30 is disposed lengthwise of shell 1 between this shell and batteries A and B, the rear end 31 of bar 30 being adapted for riding engagement over one or more convolutions of coil spring 10 and the front end 32 of contact bar 30 being adapted to engage the curved peripheral surface of reflector 6 when contact bar 30 is actuated to circuit closing position. Shell 1 is formed with an opening 33 therein and a manually operated actuating member 34 is adapted to ride upon the outer surface of shell 1 over opening 33. Any suitable connection may be provided between actuating member 34 and contact bar 30 whereby the latter will longitudinally move back and forth between the wall of shell 1 and batteries A and B and maintain good electrical contact at its rear end 31 with coil spring 10 and make and break the circuit at its front end 32 with reflector 6 when actuating member 34 is manually operated exteriorly of shell 1. A very efficient form of simple and inexpensive construction of bar 30 may include a raised portion 35 that will ride in slot 33. A collar 36 may be secured to raised portion 35. Collar 36 may be internally threaded to receive a screw 37. Actuating member 34 may be provided with a central opening 38 to receive collar 36 and screw 37, as illustrated in Figs. 2 and 3. If actuating member 34 is made of thermo-plastic material, or the same material as shell 1, it is desirable to employ an anti-friction strip 39 between actuating member 34 and shell 1, so as to make the movement of actuating member 34 easy to effect by the hand of the operator gripping shell 1.

The exact manner of disposition of contact bar 30 between batteries A and wall of shell 1 might be different in certain instances from that shown in the drawing, but I find that a very efficient and easy longitudinal movement of this contact bar 30 may be obtained by providing raised portions 40 and 41, whereby this contact bar engages the inner surface of shell 1 at a number of points and likewise engages batteries A and B at a number of points. With respect to shell 1, contact bar 30 will engage at points 40, 41 and at rear end 31. With respect to batteries A and B, contact bar 30 will engage at points 42, 43, 44 and 45. With contact bar 30 made resilient or out of spring material, it will be apparent that batteries A and

B will be firmly held together in stacked relation against the opposite side of shell 1. Expressed differently, contact bar 30 will be disposed in yieldable relation betwen shell 1 and the batteries whereby it may be easily moved longitudinally between these parts without interference and maintain good electrical contact with coil spring 10 at the rear end and in good electrical contact with reflector 6 at the front end when in closed circuit position.

It will be observed in Figs. 3, 4 and 7 that I prefer to make the contact bar slightly arcuate in cross section whereby to conform its surfaces somewhat to the peripheries of the batteries and the inner surface of shell 1 at points of engagement, and also to conform its surface at the front end 32 particularly to the peripheral surface of reflector 6 and its surface at its rear end 31 to the contour of the convolutions of coil spring 10 Fig. 4 very aptly illustrates the relation of contact bar 30 with the parts contained within shell 1. This figure also illustrates the few parts required in a flashlight structure embodying my invention. The shell thereof is omitted for the purpose of clearly illustrating the part employed to conduct the current between opposite battery terminals 15 and 25 and the light bulb interposed in the circuit. The bowed or arcuated formation cross sectionally of rear end 31 may be slightly greater than the remaining forward part, this rear end 31 also being bent, as indicated at tip 47, so as to bear slightly downwardly. A downwardly formed bead 48 is provided in rear end 31 for the purpose of abutting or locking against the rearmost convolution of coil spring 10 that rests against seat 11 of ribs 9. Bead 48 functions therefore to assure good electric contact with coil spring 10 and also to prevent contact bar 30 from being moved forwardly too far to be disengaged from coil spring 10. Forward end 32 of contact bar 30 is bowed slightly, as stated above, to make surface contact with the periphery of reflector 6, as shown in Fig. 3. It will be observed that forward end 32 may ride the periphery of head 20 of socket 7 and conform to the shape thereof by reason of its arcuate shape cross section. When moved to circuit closing position through forward movement of actuating member 34, front end 32 of contact bar 30 slides forwardly upon the peripheral surface of reflector 6, thereby closing the circuit of light bulb 8. Socket 7 is preferably of insulation material so that the circuit is only closed when forward end 32 is brought to bear against the periphery of reflector 6.

From the foregoing description it will be apparent that a very simple and efficient form of construction for a flashlight is disclosed herein. Aside from coil spring 10 in the rear end of shell 1 for the purpose of holding batteries in axial alignment and one terminal of the light bulb in current conducting relation with one of the battery terminals, longitudinally disposed contact bar 30 is the only current conducting member employed between opposite sides of the circuit. Contact bar 30 novelly maintains electrical relation with coil sprng 10, so that by movement forwardly it may close the circuit when brought into contact with the periphery of reflector 6. By means of this sliding contact bar 30, I am able to eliminate a switch member usually disposed upon or within the shell to open and close the light circuit. Shell 1 may be molded in a single operation and does not require metallic inserts in the form of bushings or the like. It permits coil spring 10 to novelly maintain electrical relation with contact bar 30 so that the current may be conducted forwardly to the front end through this member and close the circuit when the latter is slidably moved forwardly to contact reflector 6, without the use of insulation members and other parts that add to the cost and make the device less reliable in operation.

In the present construction, bar 30 is the only current conducting part between opposite ends of the device. When the outer covering of batteries A and B is made of insulating material and shell 1 is of thermo-plastic material, a structure is provided that requires no insulation for bar 30 other than the parts themselves. Riding engagement of end 31 of bar 30 over several of the convolutions of spring 10 eliminates any requirement for metallic bushing inserts within the shell 1 at this end in order to complete the circuit with rear terminal 25 of battery B. Only spring 10 seated against shoulders 11, which, being of thermo-plastic material, eliminates the need of insulation therefore, is necessary at the rear end of the batteries. Also, no parts other than the reflector itself are necessary at the front end, bar 30 making and breaking contact and lying between two insulating members, namely, the shell and batteries. Hence, a simple structure is provided that is inexpensive and very efficient.

Without further elaboration, the foregoing will so fully explain the gist of my invention that others may, by applying current knowledge, readily adopt the same for use under varying conditions of service, without eliminating certain features, which may properly be said to constitute the essential items of novelty involved, which items are intended to be defined and secured to me by the following claims.

I claim:

1. A flashlight comprising a shell of insulation material, a lens carrying cap at one end, an assembly comprising a reflector, bulb and socket also carried by said cap, a coil spring mounted within said shell at its opposite end, the space between said socket and said spring adapted to receive batteries or the like therein, and an elongated bar riding over and upon said coil spring in contactual engagement therewith and being movable forwardly without breaking said contactual engagement whereby to make electrical contactual engagement at its opposite end with said reflector, and means accessible exteriorly of said shell and connected to said bar for actuating the same.

2. A flashlight comprising a shell of insulation material adapted to receive one or more batteries or the like providing battery terminals for the opposite sides of a light circuit, a reflector at one end, a bulb adapted for electrical connection with said reflector and one of said battery terminals, a coil spring at the opposite end of said shell acting as a stop for said batteries and engaging said other battery terminal, and an elongated contact bar movably engaging said coil spring to slidably ride thereover to maintain electrical contact therewith and being movable forward without breaking said movable engagement at said coil spring to engage said reflector at the opposite end, and manual means accessible exteriorly of said shell and connected to said bar for actuating the same.

3. A flashlight comprising a shell of insulation material adapted to receive and carry one or more batteries or the like providing battery terminals for the opposite sides of a light circuit, a reflector at one end of said shell, a bulb adapted for electrical connection with said reflector and

one of said battery terminals, a coil spring at the opposite end engaging another of the battery terminals and holding said batteries in circuit-making relation between said bulb and said coil spring, and a longitudinally movable contact bar slidably riding over and upon said coil spring forwardly to said reflector for engagement therewith, said contact bar being somewhat resilient and arcuate in cross section so as to nest between said shell and said batteries and make maximum contactual engagement with said coil spring and said reflector.

4. A flashlight comprising a shell of insulation material adapted to receive and carry one or more batteries or the like, a reflector at one end, a bulb adapted to make electrical connection with said reflector and to be electrically connected to one of the terminals of the batteries, a coil spring against which said batteries are adapted to be pressed at the opposite end of said shell, a shoulder at said opposite end of said shell forming a seat for said coil spring, said coil spring making electrical connection with another of the terminals of said batteries, and a longitudinally movable contact bar slidably riding over and upon said coil spring forwardly to said reflector for engagement therewith, said shell having an opening therein, a manually operated member adapted to ride exteriorly upon said shell over said opening, and a mechanical connection extending from said manual member through said opening to said contact bar.

5. A flashlight comprising a shell adapted to receive and carry one or more batteries or the like, a bulb and lens assembly at one end of said shell adapted for contact with one of the terminals of said batteries, a coil spring seated in the opposite end of said shell and making electrical contact with one of the other terminals of said batteries, a longitudinally slidable contact bar nested between said shell and batteries and having riding contact at one end upon the periphery of at least one of the convolutions of said coil spring, said contact bar being so shaped that it firmly presses against the periphery of said spring, said assembly including a contact surface, said contact bar having its opposite end so shaped that it firmly presses against said contact surface for surface engagement therewith when said contact bar is moved longitudinally forward, and means for actuating said contact bar.

6. A flashlight comprising a shell adapted to receive and carry one or more batteries or the like, a bulb and lens assembly at one end of said shell adapted to contact with one of the terminals of said batteries, a coil spring seated in the opposite end of said shell and making electrical contact with the opposite terminal of said batteries, and current conducting means between said coil spring and said assembly comprising a longitudinally slidable contact bar having permanent riding engagement upon the periphery of said coil spring at one end thereof and a make and break engagement with said assembly at the opposite end thereof, said contact bar being slidable along the inner surface of said shell, and slidable means exterior of said shell, said means being connected to said contact bar for actuating the same.

7. A flashlight comprising an elongated cylindrical shell of thermo-plastic material having a cap at one end of the same or like material, said cylindrical shell being adapted to receive one or more batteries of substantially cylindrical shape therein, ribs formed at the opposite end within said shell, a coil spring seated against said ribs to make contact with one of the terminals of said batteries, an assembly at the cap end of said shell including a metallic arcuate shaped reflector and a bulb in electrical relation on one side of its circuit with said reflector, the opposite side of the circuit of said bulb being in electrical relation with the other terminal of said batteries, and a metallic bar comprising current carrying means between said coil spring and said reflector, said metallic bar being curved in cross section to adapt itself longitudinally between said shell and said batteries and to be readily slidable longitudinally between the same, the cross section of said metallic bar at its ends providing surface engagement with the periphery of said coil spring and said arcuate reflector when actuated to close the circuit of said bulb, and manual means actuable from the exterior of said shell for actuating said metallic bar.

JOSEPH A. GITS.