US 20060294272A1

(19) **United States**

(12) **Patent Application Publication** (10) **Pub. No.: US 2006/0294272 A1**

**Chou et al.** (43) **Pub. Date: Dec. 28, 2006**

(54) **EXTENDED USB PROTOCOL CONNECTOR AND SOCKET FOR IMPLEMENTING MULTI-MODE COMMUNICATION**

(76) Inventors: **Horng-Yee Chou**, Palo Alto, CA (US); **Ren-Kang Chiou**, Fremont, CA (US); **Szu-Kuang Chou**, Cupertino, CA (US)

Correspondence Address:
**IPSG, P.C.**
**P.O. BOX 700640**
**SAN JOSE, CA 95170-0640 (US)**

(21) Appl. No.: **11/467,134**

(22) Filed: **Aug. 24, 2006**

**Related U.S. Application Data**

(63) Continuation of application No. 10/835,423, filed on Apr. 28, 2004, now Pat. No. 7,104,848, which is a continuation-in-part of application No. 10/708,172, filed on Feb. 12, 2004, now Pat. No. 7,021,971, which is a continuation-in-part of application No. 10/605,146, filed on Sep. 11, 2003, now Pat. No. 6,854,984.

**Publication Classification**

(51) **Int. Cl.**
***G06F 13/38*** (2006.01)

(52) **U.S. Cl.** ..... **710/62**

(57) **ABSTRACT**

Host computers and peripheral devices communicating through extended USB connectors and plugs are disclosed. The host computer and peripheral device are capable of communicating via multiple communication modes, using the extended capability of the extended USB connectors and plugs. Software and hardware to facilitate such communication are also disclosed.

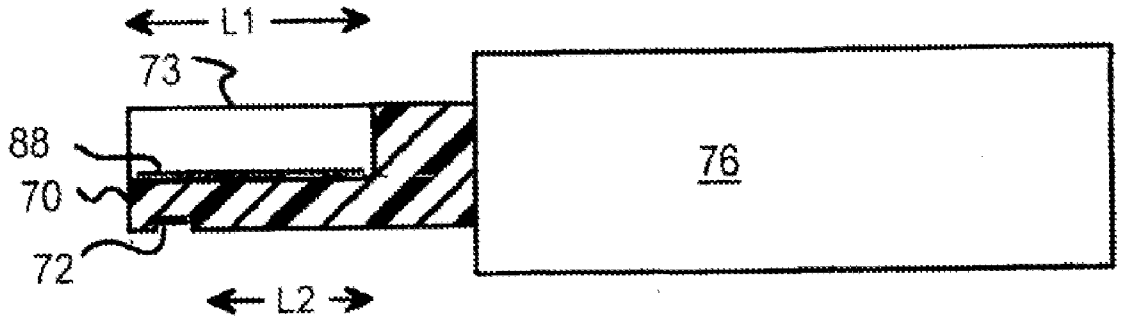

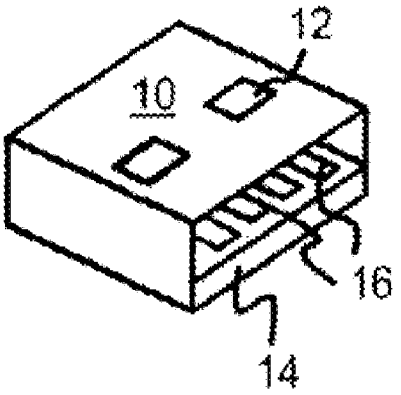


PRIOR ART

FIG. 1A

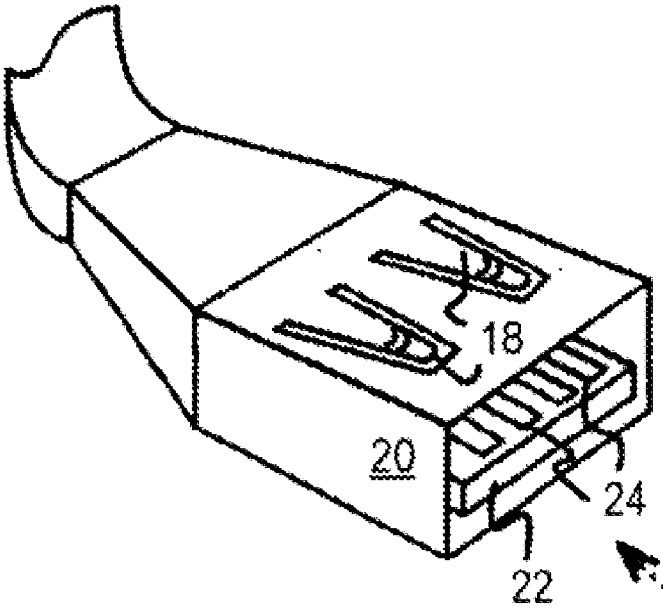


PRIOR ART

FIG. 1B

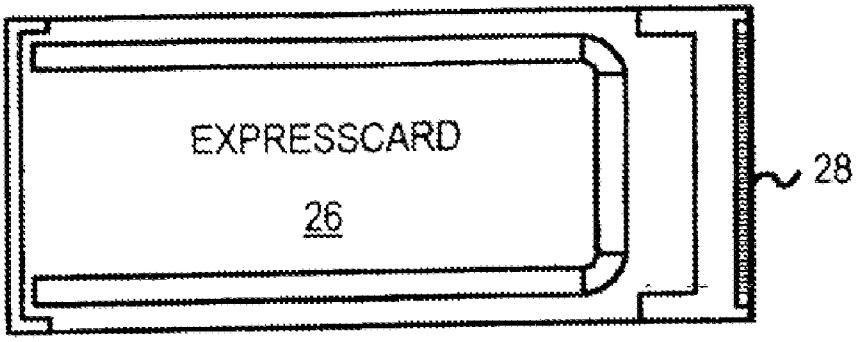


PRIOR ART

FIG. 2A

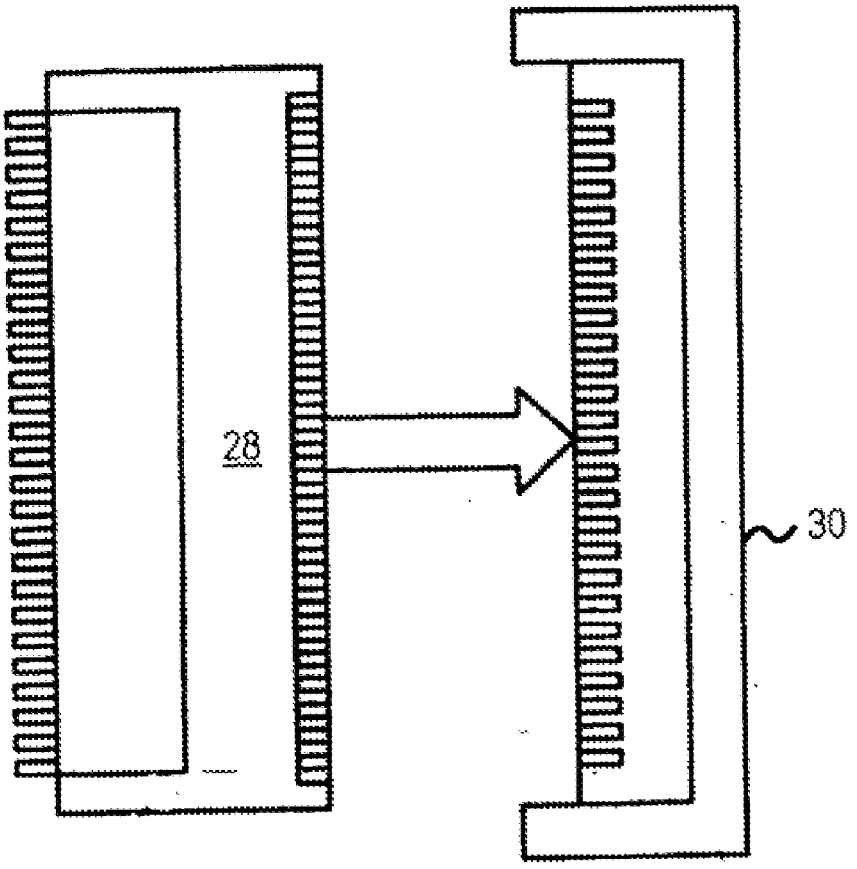


PRIOR ART

FIG. 2B

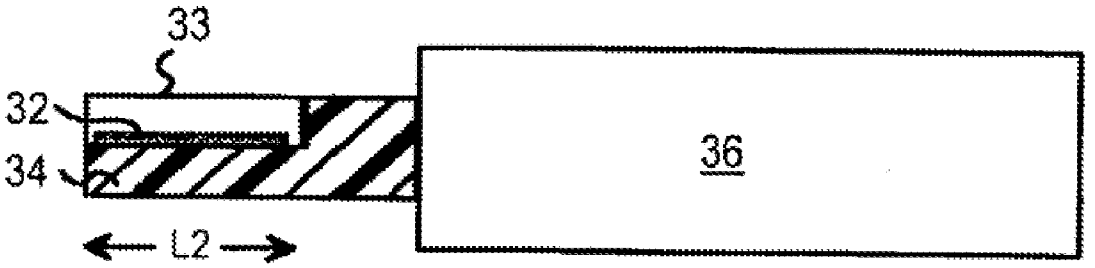


FIG. 3A PRIOR ART

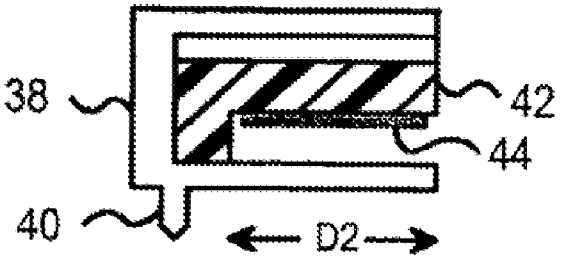


FIG. 3B PRIOR ART

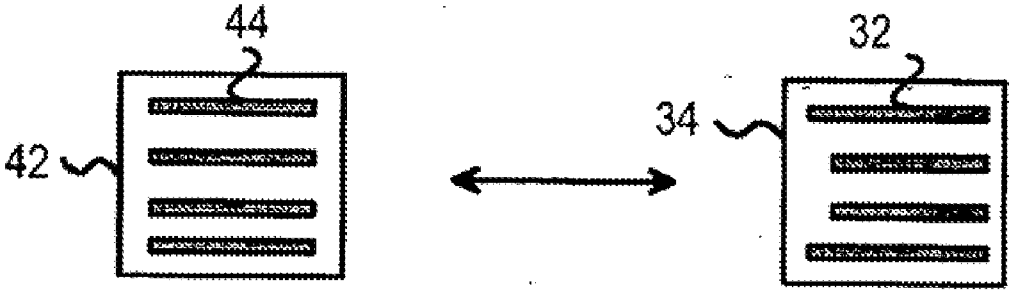


PRIOR ART

FIG. 3C

FIG. 3D

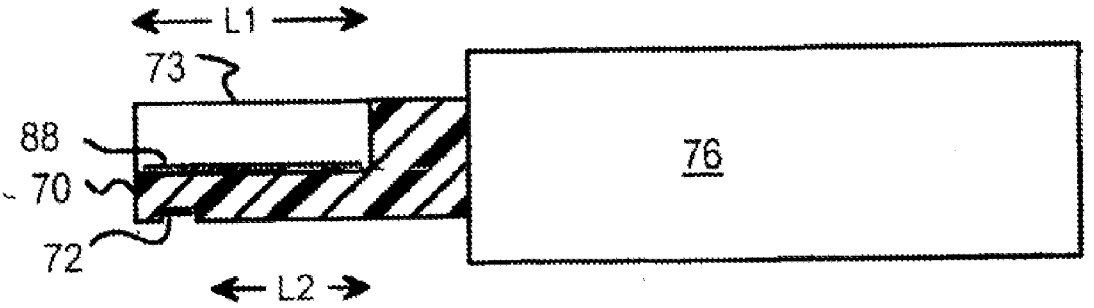


FIG. 4A

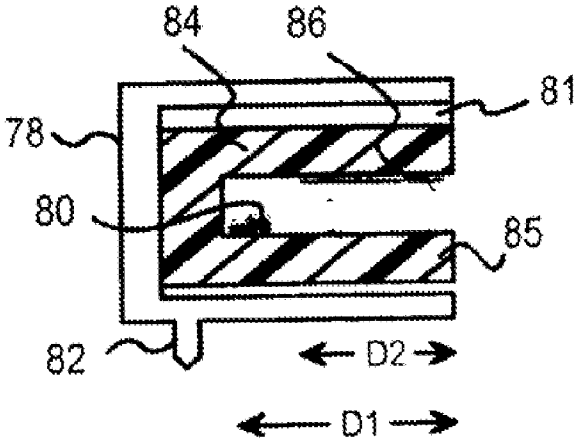


FIG. 4B

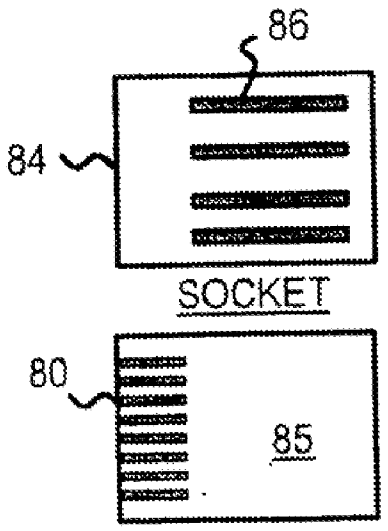


FIG. 4C

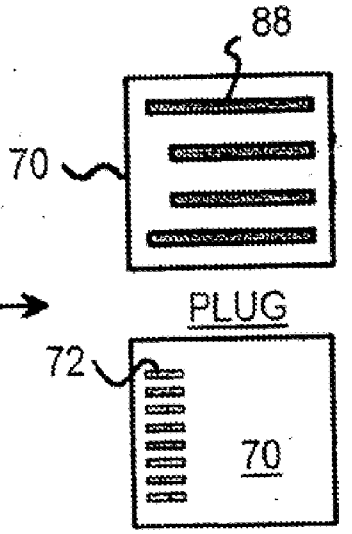


FIG. 4D

TOP

BOTTOM

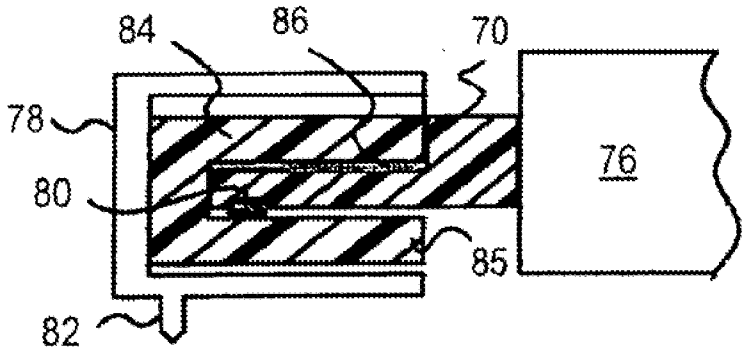


FIG. 4E

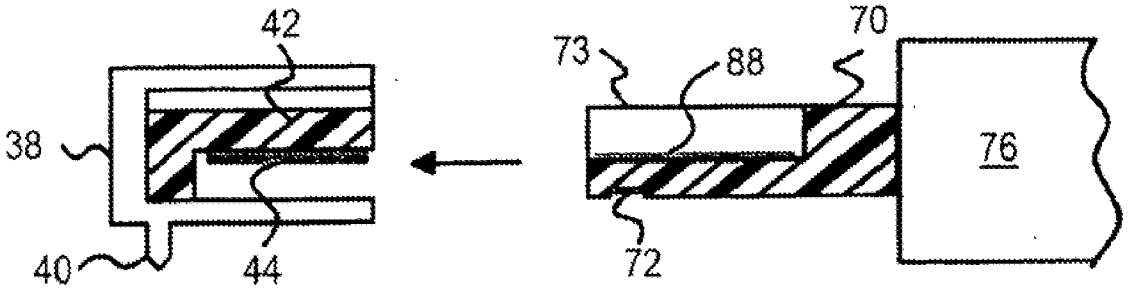


FIG. 4F

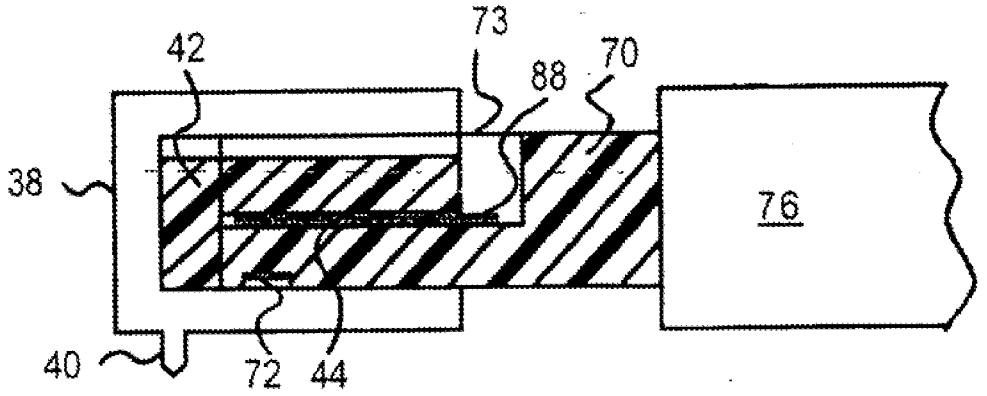


FIG. 4G

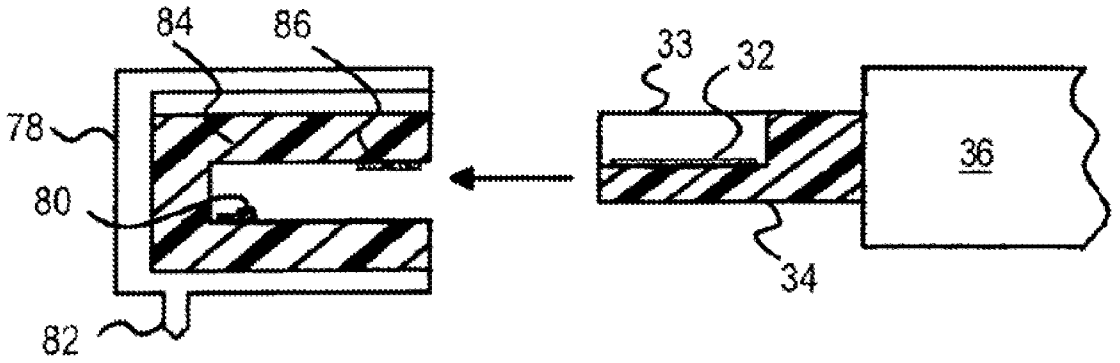


FIG. 4H

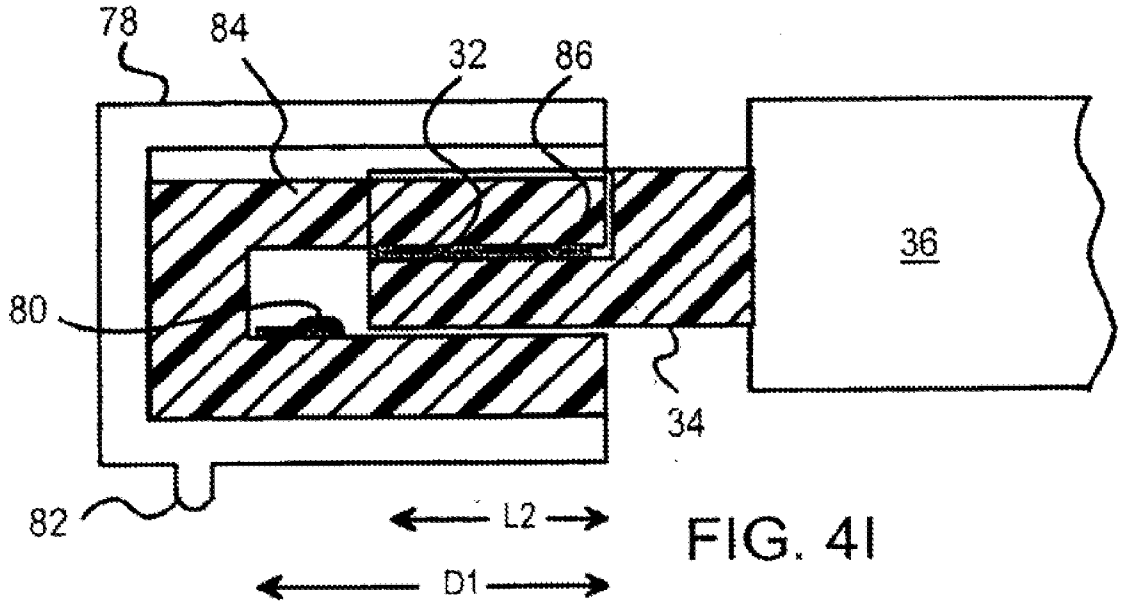


FIG. 4I

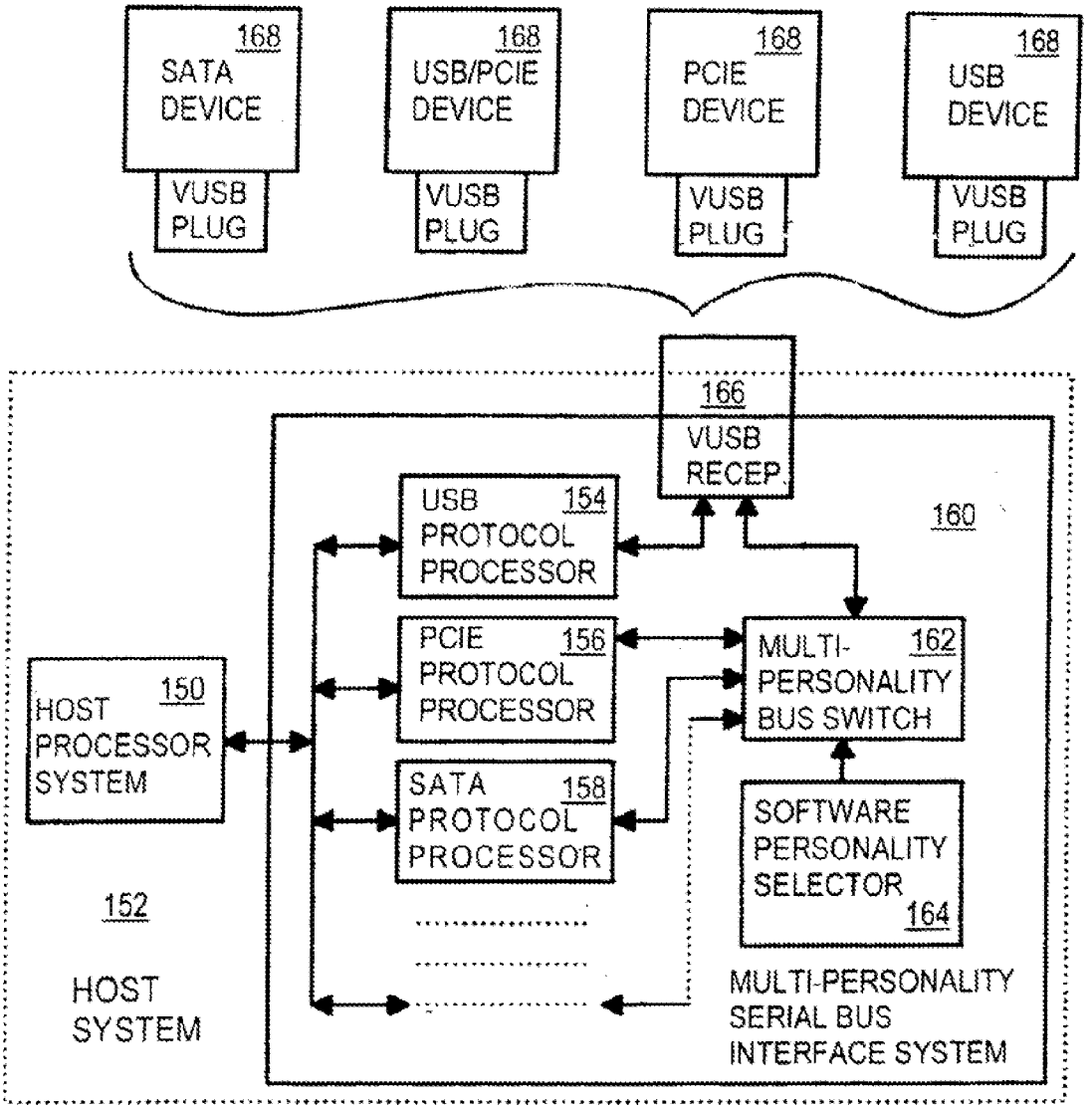
168
SATA DEVICE
VUSB PLUG
168
USB/PCIE DEVICE
VUSB PLUG
168
PCIE DEVICE
VUSB PLUG
168
USB DEVICE
VUSB PLUG
166
VUSB RECEP.
160
USB 154
PROTOCOL PROCESSOR
PCIE 156
PROTOCOL PROCESSOR
SATA 158
PROTOCOL PROCESSOR
MULTI- 162
PERSONALITY BUS SWITCH
SOFTWARE PERSONALITY SELECTOR 164
HOST PROCESSOR SYSTEM 150
152
HOST SYSTEM
MULTI-PERSONALITY SERIAL BUS INTERFACE SYSTEM

FIG. 5A

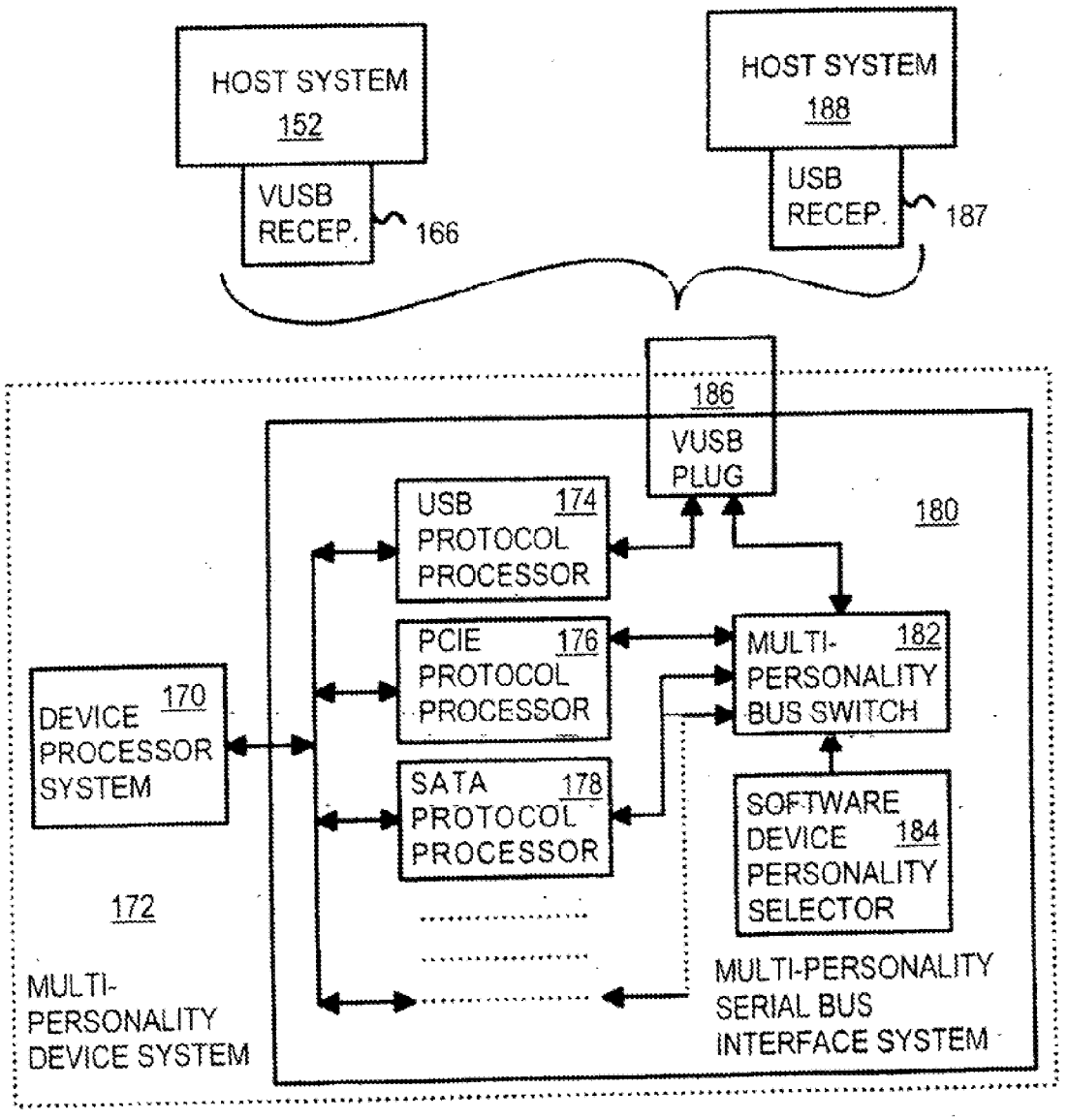
HOST SYSTEM
152
VUSB
RECEP.
166
HOST SYSTEM
188
USB
RECEP.
187
186
VUSB
PLUG
180
USB
174
PROTOCOL
PROCESSOR
PCIE
176
PROTOCOL
PROCESSOR
SATA
178
PROTOCOL
PROCESSOR
MULTI-
182
PERSONALITY
BUS SWITCH
SOFTWARE
DEVICE
184
PERSONALITY
SELECTOR
DEVICE
170
PROCESSOR
SYSTEM
172
MULTI-
PERSONALITY
DEVICE SYSTEM
MULTI-PERSONALITY
SERIAL BUS
INTERFACE SYSTEM

FIG. 5B

| SIDE | PIN-OUT | USB | PCI EX | SATA | 1394 |
|---|---|---|---|---|---|
| A | 1 | 5V | 5V | 5V | 5V |
| A | 2 | D- | D- | D- | D- |
| A | 3 | D+ | D+ | D+ | D+ |
| A | 4 | GND | GND | GND | GND |
| B | 1 | 3.3V | 3.3V | 3.3V | 3.3V |
| B | 2 | 1.5V | 1.5V | 1.5V | 1.5V |
| B | 3 | Default | PETn | T- | TPB* |
| B | 4 | Default | PETp | T+ | TPB |
| B | 5 | GND | GND | GND | GND |
| B | 6 | Default | PERn | R- | TPA* |
| B | 7 | Default | PERp | R+ | TPA |
| B | 8 | 12V | 12V | 12V | 12V |

FIG. 6

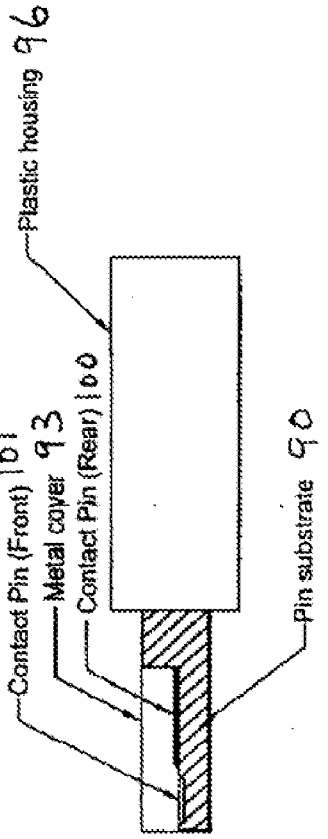


FIG.7A

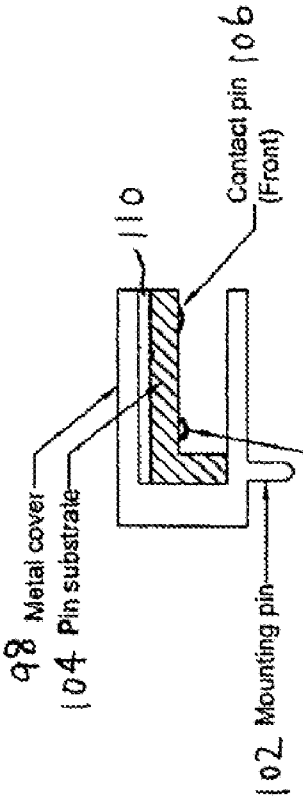


FIG.7B

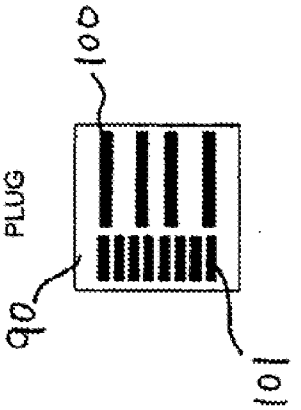


FIG.7D

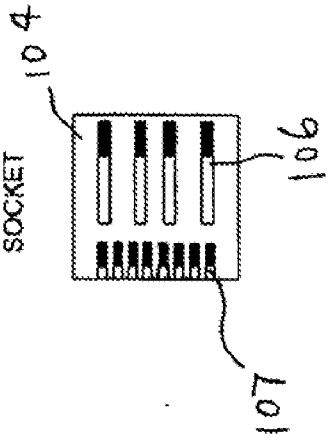


FIG.7C

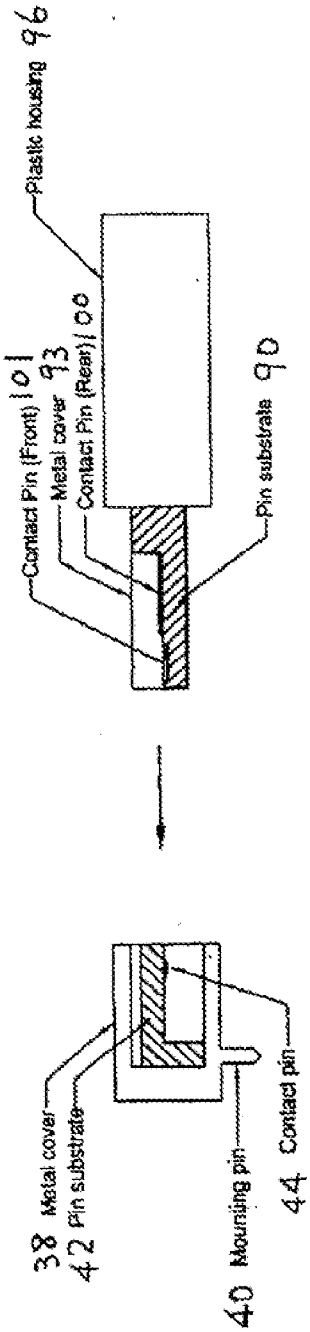
96 Plastic housing
101 Contact Pin (Front)
93 Metal cover
100 Contact Pin (Rear)
90 Pin substrate
38 Metal cover
42 Pin substrate
40 Mounting pin
44 Contact pin

FIG.7E

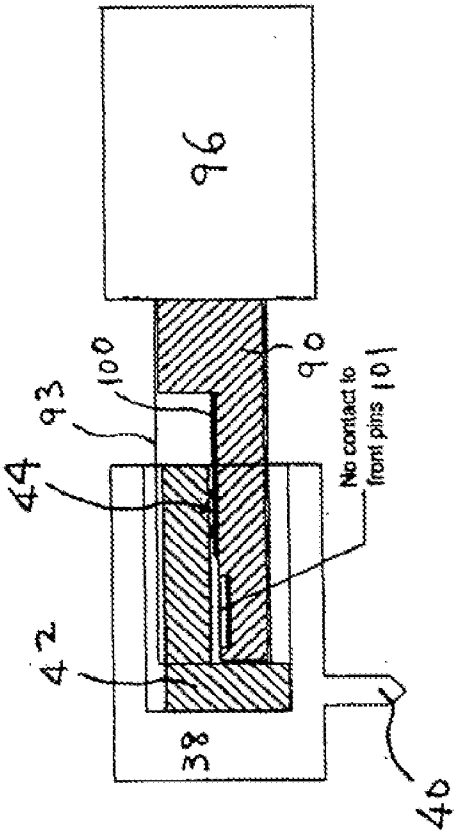
96
90
100
93
44
No contact to front pins 101
42
38
40

FIG.7F

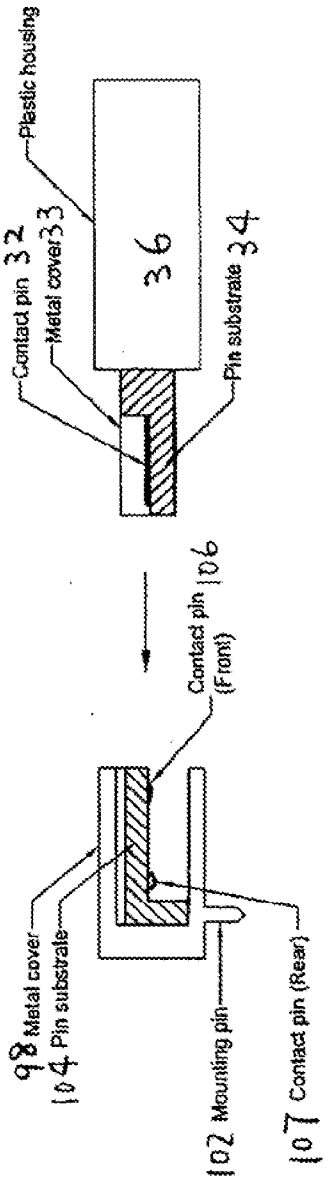
Plastic housing
Contact pin 32
Metal cover 33
36
Pin substrate 34
Contact pin (Front) 106
98 Metal cover
104 Pin substrate
102 Mounting pin
107 Contact pin (Rear)

FIG.7G

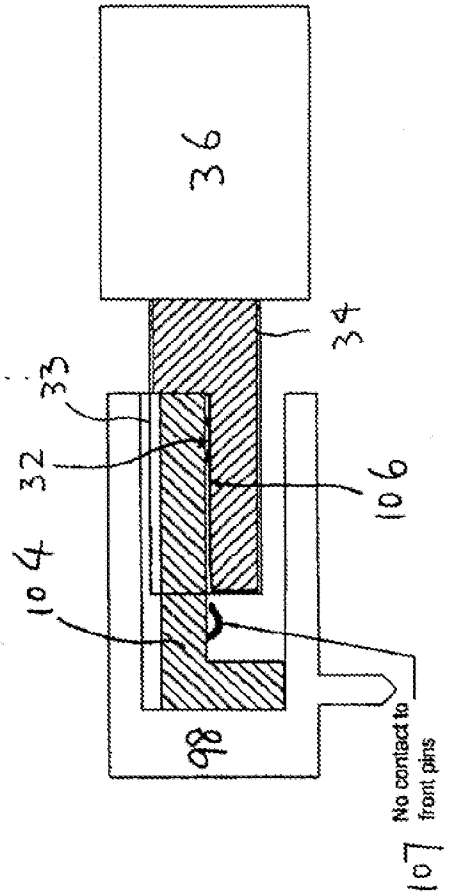
36
34
33
32
106
104
98
No contact to front pins
107

FIG.7H

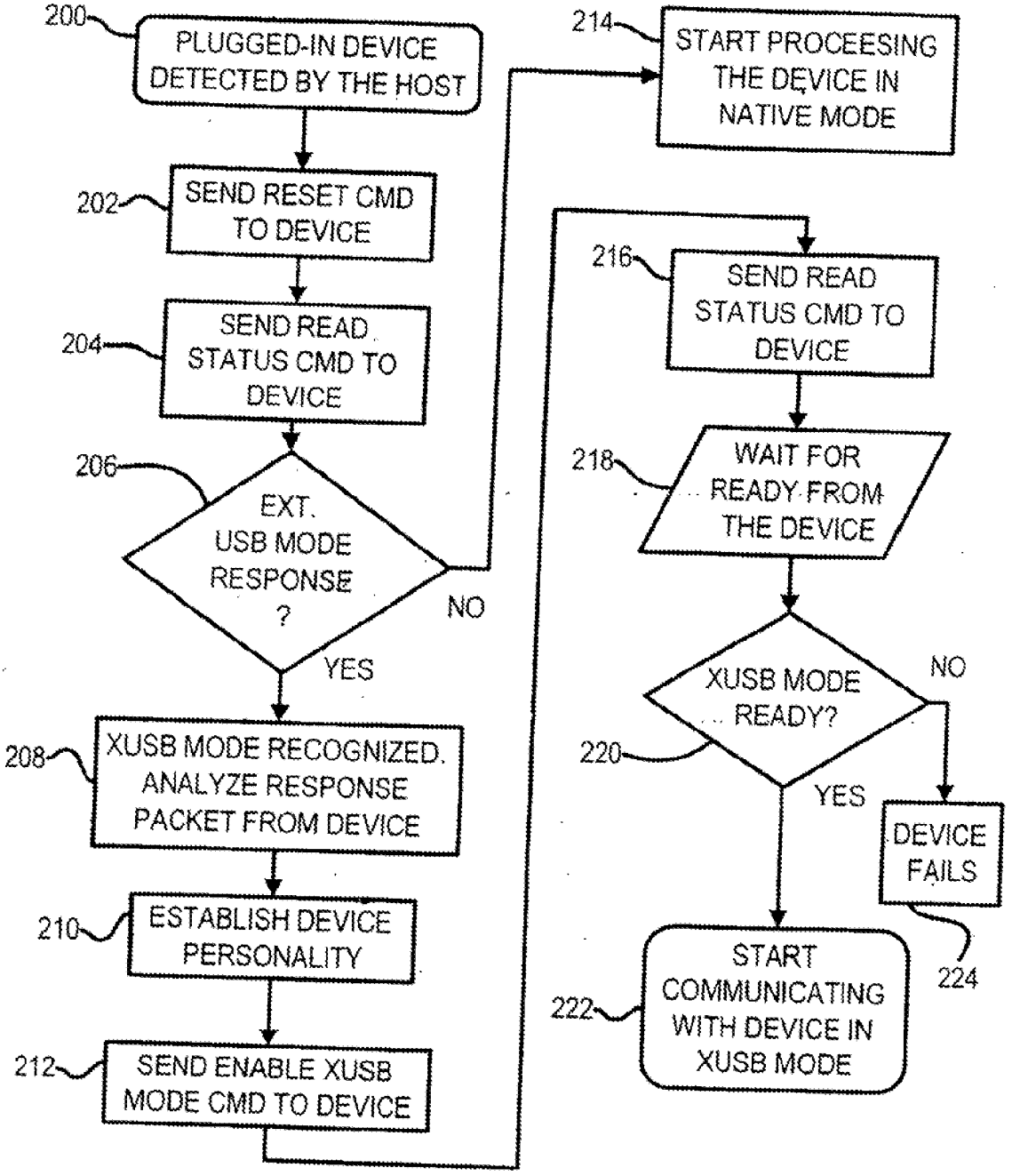
200
PLUGGED-IN DEVICE DETECTED BY THE HOST
202
SEND RESET CMD TO DEVICE
204
SEND READ STATUS CMD TO DEVICE
206
EXT. USB MODE RESPONSE ?
NO
YES
208
XUSB MODE RECOGNIZED. ANALYZE RESPONSE PACKET FROM DEVICE
210
ESTABLISH DEVICE PERSONALITY
212
SEND ENABLE XUSB MODE CMD TO DEVICE
214
START PROCEESING THE DEVICE IN NATIVE MODE
216
SEND READ STATUS CMD TO DEVICE
218
WAIT FOR READY FROM THE DEVICE
XUSB MODE READY?
220
NO
YES
DEVICE FAILS
224
222
START COMMUNICATING WITH DEVICE IN XUSB MODE

FIG. 8

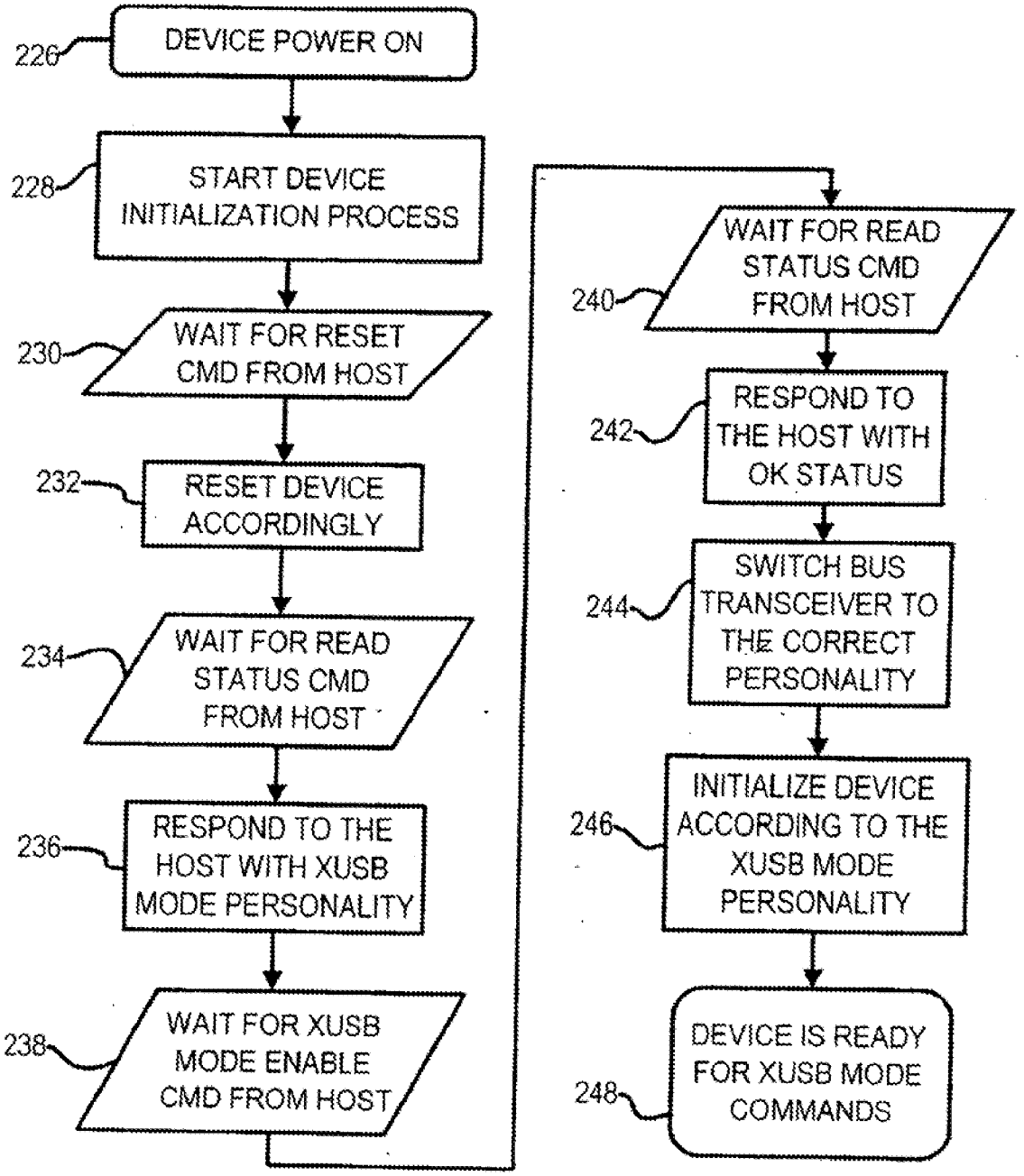
226
DEVICE POWER ON
228
START DEVICE INITIALIZATION PROCESS
230
WAIT FOR RESET CMD FROM HOST
232
RESET DEVICE ACCORDINGLY
234
WAIT FOR READ STATUS CMD FROM HOST
236
RESPOND TO THE HOST WITH XUSB MODE PERSONALITY
238
WAIT FOR XUSB MODE ENABLE CMD FROM HOST
240
WAIT FOR READ STATUS CMD FROM HOST
242
RESPOND TO THE HOST WITH OK STATUS
244
SWITCH BUS TRANSCEIVER TO THE CORRECT PERSONALITY
246
INITIALIZE DEVICE ACCORDING TO THE XUSB MODE PERSONALITY
248
DEVICE IS READY FOR XUSB MODE COMMANDS

FIG. 9

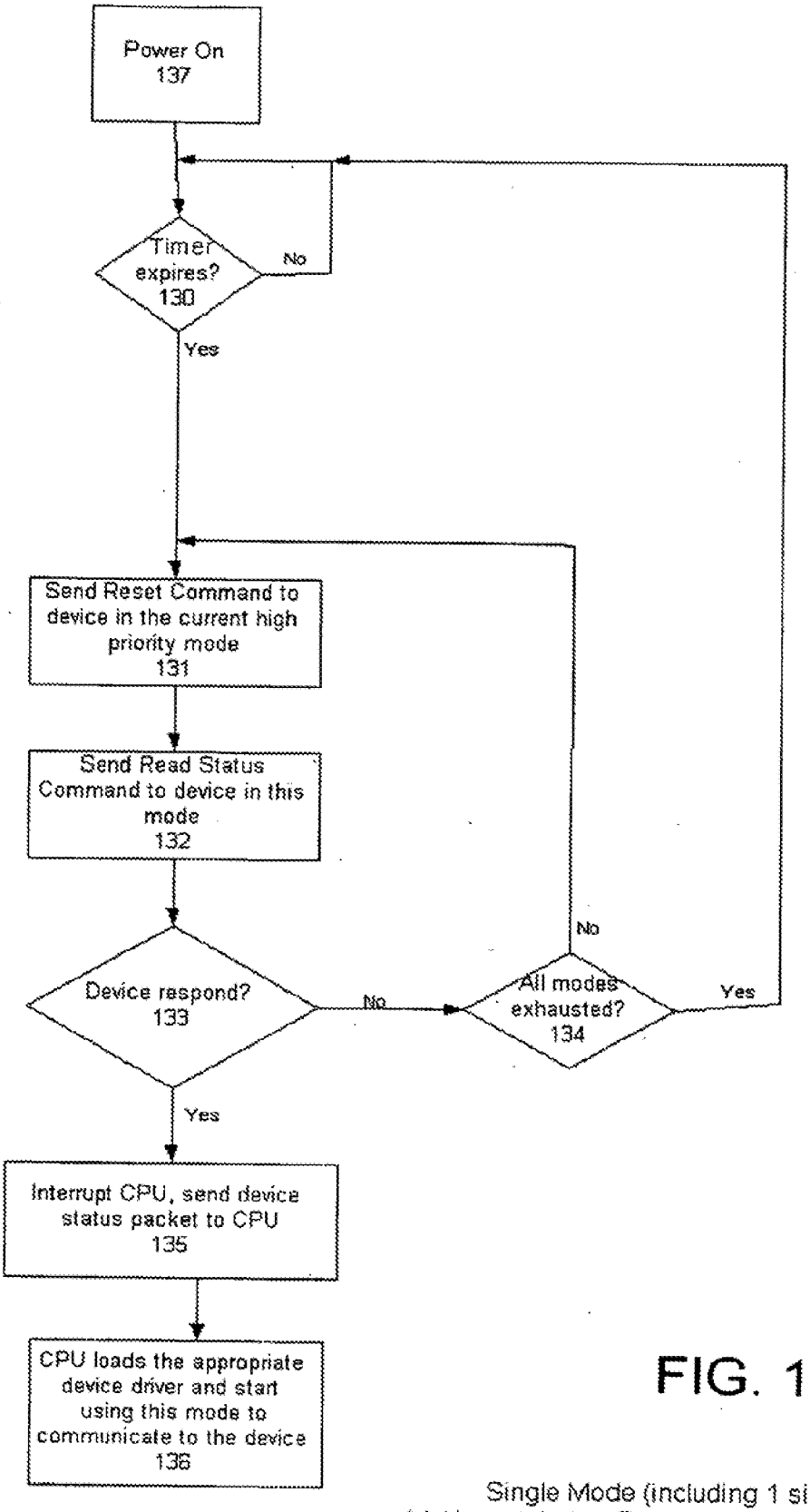


FIG. 10

Single Mode (including 1 side Multi-mode) Host Detecting Device

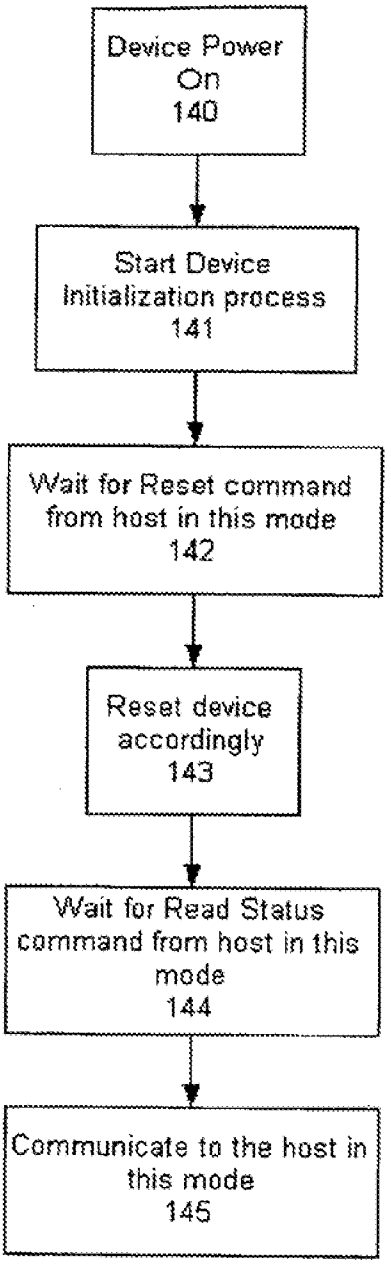


FIG. 11

Single Mode Device Power-on Sequence

| SIDE | PIN-OUT | USB | PCI EX | SATA | 1394 |
|---|---|---|---|---|---|
| A | 1 | 5V | 5V | 5V | 5V |
| A | 2 | D- | PETn | T- | TPB* |
| A | 3 | D+ | PETp | T+ | TPB |
| A | 4 | GND | GND | GND | GND |
| B | 1 | 3.3V | 3.3V | 3.3V | 3.3V |
| B | 2 | 1.5V | 1.5V | 1.5V | 1.5V |
| B | 3 | GND | GND | GND | GND |
| B | 4 | Default | PERn | R- | TPA* |
| B | 5 | Default | PERp | R+ | TPA |
| B | 6 | 12V | 12V | 12V | 12V |

FIG. 12

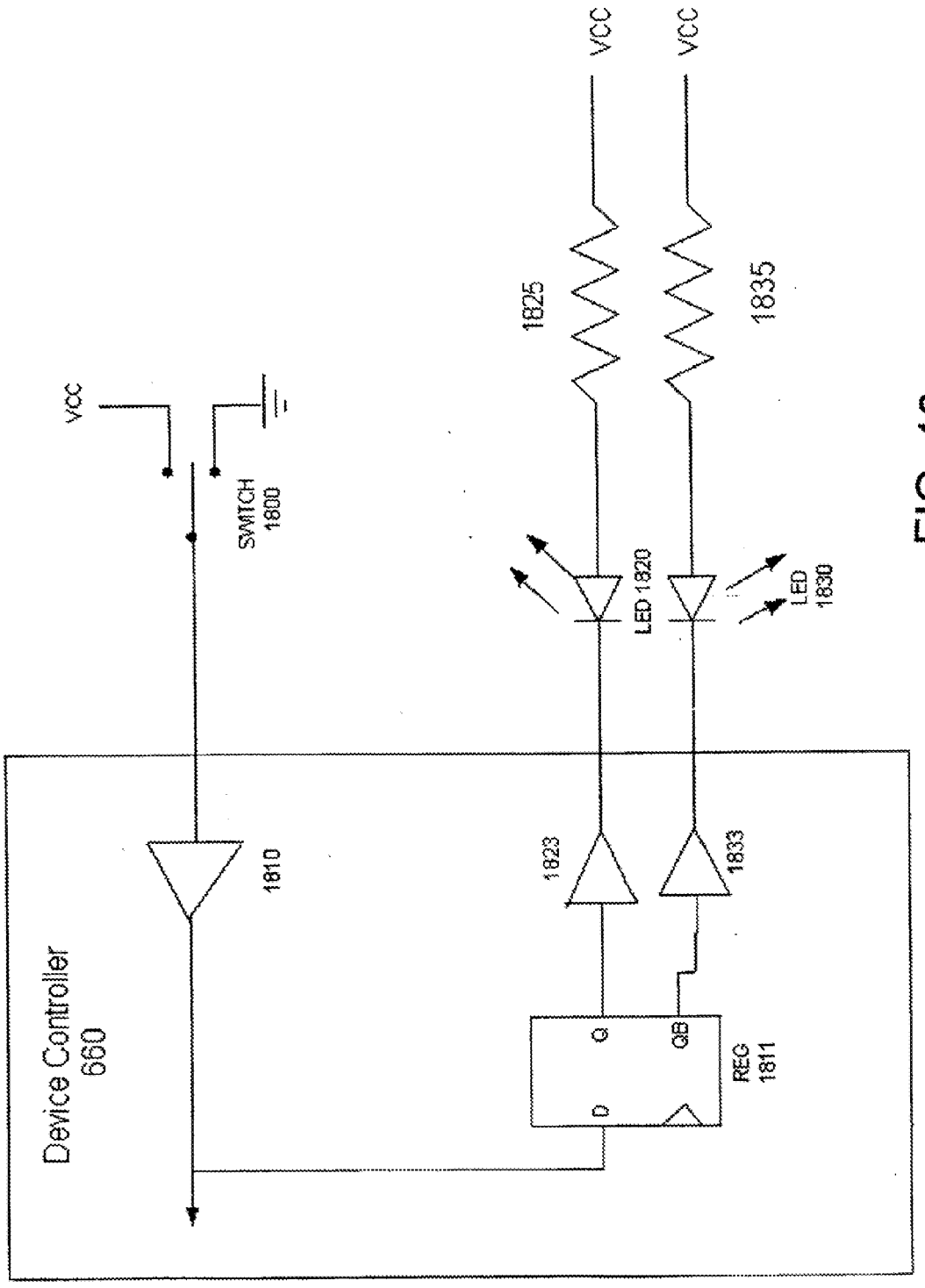
VCC
VCC
1825
1835
VCC
SWITCH
1800
LED 1820
LED
1830
1810
1823
1833
Device Controller
660
Q
QB
D
REG
1811

FIG. 13

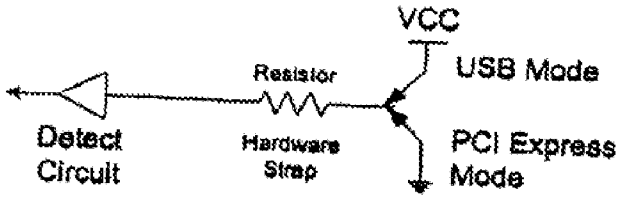
VCC
USB Mode
Resistor
Detect
Circuit
Hardware
Strap
PCI Express
Mode

FIG. 14

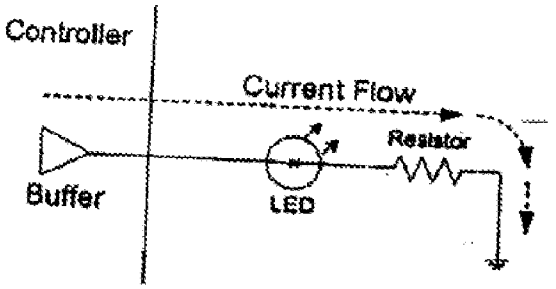
Controller
Current Flow
Resistor
Buffer
LED

FIG. 15

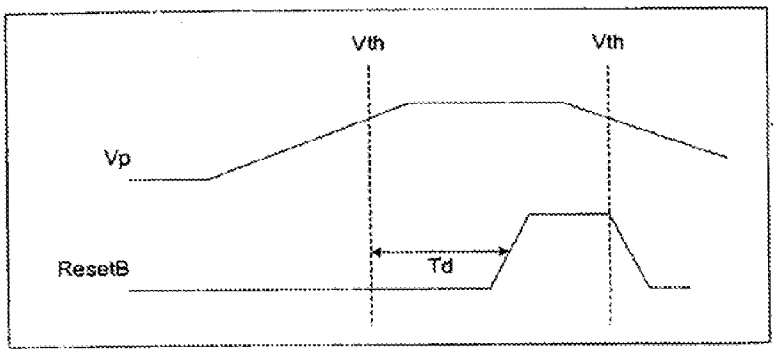


FIG. 16

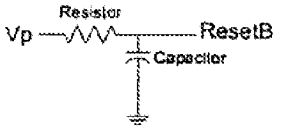


FIG. 17

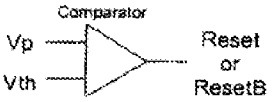


FIG. 18

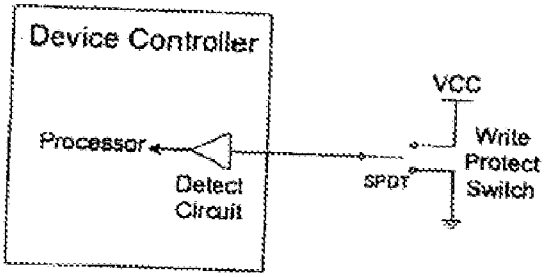


FIG. 19A

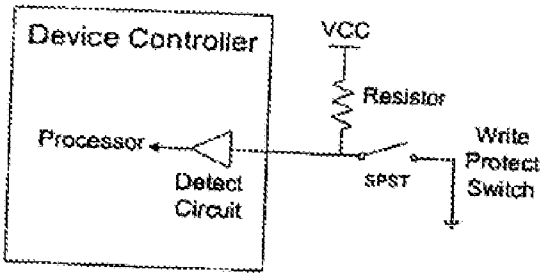


FIG. 19B

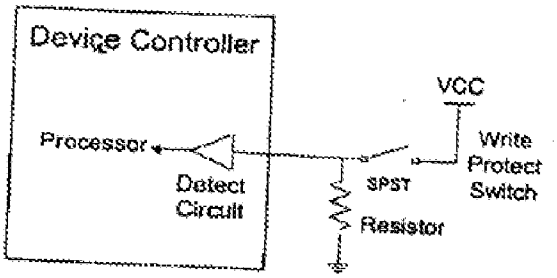


FIG. 19C

# EXTENDED USB PROTOCOL CONNECTOR AND SOCKET FOR IMPLEMENTING MULTI-MODE COMMUNICATION

[0001] This application is a continuation-in-part of a patent application entitled "Dual-Personality Extended-USB Plug and Receptacle with PCI-Express or Serial AT-Attachment Extensions," Attorney Docket No. ML-30, Filed Feb. 12, 2004, which is a continuation-in-part of a patent application entitled "Slim USB Connector with Spring-engaging Depressions, Stabilizing Dividers and Wider End Rails for Flash-Memory Drive", U.S. Ser. No. 10/605,146, Filed Sep. 11, 2003, all of which are incorporated herein by reference.

## BACKGROUND OF THE INVENTION

[0002] Universal-Serial-Bus (USB) has been widely deployed as a standard bus for connecting peripherals such as digital cameras and music players to personal computers (PCs) and other devices. Currently, the top transfer rate of USB is 480 Mb/s, which is quite sufficient for most applications. Faster serial-bus interfaces are being introduced to address different requirements. PCI Express, at 2.5 Gb/s, and SATA, at 1.5 Gb/s and 3.0 Gb/s, are two examples of high-speed serial bus interfaces for the next generation devices, as are IEEE 1394 and Serial Attached Small-Computer System Interface (SA SCSI or SAS).

[0003] **FIG. 1A** shows a prior-art peripheral-side USB connectors. USB connector **10** may be mounted on a board in the peripheral. USB connector **10** can be mounted in an opening in a plastic case (not shown) for the peripheral.

[0004] USB connector **10** contains a small connector substrate **14**, which is often white ceramic, black rigid plastic, or another sturdy substrate. Generally speaking, connector substrate **14** has four metal contacts **16** formed thereon. In some extended USB implementations, such as that disclosed in U.S. Pat. No. 6,334,793 B1, additional metal contacts (e.g., four additional contacts for a total of eight contacts) may be provided. Metal contacts **16** carry the USB signals generated or received by a controller chip in the peripheral. USB signals include power, ground, and serial differential data D+, D−.

[0005] USB connector **10** contains a metal case that wraps around connector substrate **14**. The metal case touches connector substrate **14** on three of the sides of the connector substrate **14**. The top side of connector substrate **14**, holding metal contacts **16**, has a large gap to the top of the metal case. On the top and bottom of this metal wrap are formed holes **12**. USB connector **10** is a male connector, such as a type-A USB connector.

[0006] **FIG. 1B** shows a female USB connector. Female USB connector **20** can be an integral part of a host or PC, or can be connected by a cable. Another connector substrate **22** contains four metal contacts **24** that make electrical contact with the four metal contacts **16** of the male USB connector **10** of **FIG. 1A**. Connector substrate **22** is wrapped by a metal case, but small gaps are between the metal case and connector substrate **22** on the lower three sides.

[0007] Locking is provided by metal springs **18** in the top and bottom of the metal case. When male USB connector **10** of **FIG. 1A** is flipped over and inserted into Female USB connector **20** of **FIG. 1B**, metal springs **18** lock into holes **12** of male USB connector **10**. This allows the metal casings to be connected together and grounded.

[0008] Universal-Serial-Bus (USB) is a widely used serial-interface standard for connecting external devices to a host such as a personal computer (PC). Another new standard is PCI Express, which is an extension of Peripheral Component Interconnect (PCI) bus widely used inside a PC for connecting plug-in expansion cards. An intent of PCI Express is to preserve and re-use PCI software. Unfortunately, USB connectors with their 4 metal contacts do not support the more complex PCI Express standard.

[0009] FIGS. **2**A-B show an ExpressCard and its connector. A new removal-card form-factor known as ExpressCard has been developed by the Personal-Computer Memory Card International Association (PCMCIA), PCI, and USB standards groups. ExpressCard **26** is about 75 mm long, 34 mm wide, and 5 mm thick and has ExpressCard connector **28**.

[0010] **FIG. 2B** shows that ExpressCard connector **28** fits into connector or socket **30** on a host when ExpressCard **26** is inserted into an ExpressCard slot on the host. Since ExpressCard connector **28** and socket **30** are 26-pin connectors, they contain many more signals than a 4-pin USB connector. The additional PCI-Express interface can be supported as well as USB. ExpressCard **26** can also use USB to communicate with the host. Differential USB data signals D+ and D− are connected between ExpressCard **26** and a host chip set. The host chip set contains a USB host controller to facilitate communication with ExpressCard **26**.

[0011] PCI Express supports data rates up to 2.5 G/b, much higher than USB. While the ExpressCard standard is useful for its higher possible data rate, the 26-pin connectors and wider card-like form factor limit the use of ExpressCards. The smaller USB connector and socket are more desirable than the larger ExpressCard.

[0012] Another interface, serial AT-attachment (SATA) supports data rates of 1.5 Gb/s and 3.0 Gb/s. However, SATA uses two connectors, one 7-pin connector for signals and another 15-pin connector for power. Due to its clumsiness, SATA is more useful for internal storage expansion than for external peripherals.

[0013] While SATA and ExpressCard are much higher-speed interfaces than USB, they use larger, bulky connectors while USB has a single, small connector.

[0014] FIGS. **3**A-D shows cross-sections of a prior-art USB connector and socket. In **FIG. 3A**, a prior-art peripheral-side plug or USB connector has plastic housing **36** that the user can grip when inserting the USB connector into a USB socket such as the socket in **FIG. 3B**. Pin substrate **34** can be made of ceramic, plastic, or other insulating material, and supports metal contact pins **32**. There are 4 metal contact pins **32** arranged as shown in the top view of pin substrate **34** in **FIG. 3D**. Metal cover **33** is an open-ended rectangular tube that wraps around pin substrate **34** and the gap above metal contact pins **32**.

[0015] In **FIG. 3B**, a prior-art host-side USB socket is shown, such as a USB socket on a host PC. Metal cover **38** is a rectangular tube that surrounds pin substrate **42** and has an opening to receive the USB connector's pin substrate **34**. Metal contact pins **44** are mounted on the underside of pin substrate **42**. Mounting pin **40** is formed from metal cover **38** and is useful for mounting the USB socket to a printed-circuit board (PCB) or chassis on the host PC.

[0016] Metal contact pins **44** are arranged as shown in the bottom view of pin substrate **42** of **FIG. 3C**. The four metal contact pins **44** are arranged to slide along and make contact with the four metal contact pins **32** when the USB connector is inserted into the USB socket. Pin substrates **34**, **42** are formed in an L-shape with matching cutouts above metal contact pins **32** and below metal contact pins **44** that fit together when inserted.

[0017] Metal contact pins **32**, **44** can have a slight bend or kink in them (not shown) to improve mechanical and electrical contact. The bend produces a spring-like action that is compressed when the USB connecter is inserted into the USB socket. The force of the compressed spring improved contact between metal contact pins **32**, **44**.

[0018] While useful, prior-art USB sockets and connectors have only four metal contact pins **32** that mate with four metal contact pins **44**. The four metal contact pins carry power, ground, and differential data lines D+, D−. There are no additional pins for extended signals required by other standard buses, such as PCI Express or Serial ATA.

[0019] What is desired is an extended USB socket and connector. An extended-USB connector that fits into standard USB sockets, yet has additional metal contacts is desirable. An extended-USB socket that can receive a standard USB connector or the extended USB connector is also desired. The extended socket and connector when mated carry additional signals, allowing for higher-speed bus interfaces to be used. A higher-speed extended connector and socket that are physically and electrically compatible with existing USB sockets and connector is desirable. Auto-detection of higher-speed capabilities is desired when the extended USB connector is plugged into the extended USB socket.

## SUMMARY OF INVENTION

[0020] The invention relates, in one embodiment, to a host computer, which includes a host processor and a set of protocol processors having at least a first protocol processor, the set of protocol processors being operatively coupled to communicate with the host processor, the first protocol processor being configured to process a first protocol. There is included an extended Universal-Serial-bus (USB) socket configured to facilitate communication between the host processor and an external device configured to be detachably coupled with the extended USB socket. The extended USB socket includes an extended cavity having an extended cavity length longer than a length of a cavity of an industry-standard USB connector socket. The extended USB socket also includes a plurality of USB socket contacts arranged in a first socket-pin row in a direction perpendicular to a longitudinal axis of the extended USB socket, the plurality of USB socket contacts being disposed in the cavity and configured to carry USB signals. The extended USB socket additionally includes a plurality of non-USB socket contacts arranged in a second socket-pin row parallel to the first socket-pin row, the plurality of non-USB socket contacts being configured to carry non-USB signals.

[0021] In another embodiment, the invention relates to a method for facilitating communication with a peripheral device, which includes providing a host computer. Providing the host computer includes providing a host processor and providing a set of protocol processors having at least a first protocol processor, the set of protocol processors being operatively coupled to communicate with the host processor, the first protocol processor being configured to process a first protocol. Providing the host computer also includes providing an extended Universal-Serial-Bus (USB) socket configured to facilitate communication between the host processor and an external device configured to be detachably coupled with the extended USB socket. The extended USB socket includes an extended cavity having an extended cavity length longer than a length of a cavity of an industry-standard USB connector socket. The extended USB socket also includes a plurality of USB socket contacts arranged in a first socket-pin row in a direction perpendicular to a longitudinal axis of the extended USB socket, the plurality of USB socket contacts being disposed in the cavity and configured to carry USB signals. The extended USB socket additionally includes a plurality of non-USB socket contact arranged in a second socket-pin row parallel to the first socket-pin row, the plurality of non-USB socket contacts being configured to carry non-USB signals.

[0022] In a further embodiment, the invention relates to a peripheral device, which includes a device processor and a set of protocol processors having at least a first protocol processor, the set of protocol processors being operatively coupled to communicate with the device processor, the first protocol processor being configured to process a first protocol. The peripheral device includes an extended Universal-Serial-Bus (USB) connector configured to facilitate communication between the device processor and a host computer configured to be detachably coupled with the extended USB connector. The extended USB connector includes an extended pin substrate having an extended substrate length longer than a length of a pin substrate of an industry-standard USB connector. The extended USB connector also includes a plurality of USB connector contacts supported by the extended pin substrate and arranged in a first connector row in a direction perpendicular to a longitudinal axis of the extended USB plug, the plurality of USB connector contacts being configured to carry USB signals. The extended USB connector additionally includes a plurality of non-USB connector contacts supported by the extended pin substrate and arranged in a second connector row parallel to the first connector row, the plurality of non-USB connector contacts being configured to carry non-USB signals.

[0023] In yet another embodiment, the invention relates to a method for facilitating communication with a host computer, which includes providing a peripheral device. Providing the peripheral device includes providing a device processor and providing a set of protocol processors having at least a first protocol processor, the set of protocol processors being operatively coupled to communicate with the device processor, the first protocol processor being configured to process a first protocol. Providing the peripheral device also includes providing an extended Universal-Serial-Bus (USB)

connector configured to facilitate communication between the device processor and the host computer that is configured to be detachably coupled with the extended USB connector. The extended USB connector includes an extended pin substrate having an extended substrate length longer than a length of a pin substrate of an industry-standard USB connector. The extended USB connector also includes a plurality of USB connector contacts supported by the extended pin substrate and arranged in a first row in a direction perpendicular to a longitudinal axis of the extended USB plug, the plurality of USB connector contacts being configured to carry USB signals. The extended USB connector further includes a plurality of non-USB connector contacts supported by the extended pin substrate and arranged in a second row parallel to the first row, the plurality of non-USB connector contacts being configured to carry non-USB signals.

[0024] These and other features of the present invention will be described in more detail below in the detailed description of the invention and in conjunction with the following figures.

## BRIEF DESCRIPTION OF THE DRAWINGS

[0025] The present invention is illustrated by way of example, and not by way of limitation, in the figures of the accompanying drawings and in which like reference numerals refer to similar elements and in which:

[0026] **FIG. 1A** shows a prior-art peripheral-side USB connector.

[0027] **FIG. 1B** shows a female USB connector.

[0028] FIGS. **2**A-B show an ExpressCard and its connector.

[0029] FIGS. **3**A-D shows cross-sections of a prior-art USB connector and socket.

[0030] FIGS. **4**A-I show, in accordance with embodiments of the present invention, extended USB connectors and sockets having metal contact pins on both top and bottom surfaces of the pin substrates.

[0031] **FIG. 5A** shows, in accordance with an embodiment of the present invention, a block diagram of a host with an extended-USB socket that supports extended-mode communication.

[0032] **FIG. 5B** shows, in accordance with an embodiment of the present invention, a block diagram of a peripheral with an extended-USB connector that supports extended-mode communication.

[0033] **FIG. 6** shows, in accordance with an embodiment of the present invention, a table of extended and standard pins in the extended USB connector and socket for **FIGS. 5**.

[0034] FIGS. **7**A-H show, in accordance with embodiments of the present invention, a second embodiment of extended USB connectors and sockets having metal contact pins on just one of the surfaces of the pin substrates.

[0035] **FIG. 8** shows, in accordance with an embodiment of the present invention, a flowchart of an initialization routine executed by a host for detecting a device plugged into an extended USB socket. The host can be multi mode or single mode.

[0036] **FIG. 9** shows, in accordance with an embodiment of the present invention, a flowchart of an initialization routine executed by a peripheral device plugged into an extended USB socket. The device can be multi mode or single mode.

[0037] **FIG. 10** shows, in accordance with an embodiment of the present invention, a flowchart of an initialization routine executed by a host for detecting a device plugged into an extended USB socket. The host can be single mode or 1 side multi mode.

[0038] **FIG. 11** shows, in accordance with an embodiment of the present invention, a flowchart of an initialization routine executed by a peripheral device plugged into an extended USB socket. The device is single mode.

[0039] **FIG. 12** shows, in accordance with an embodiment of the present invention, 10 pin arrangement instead of 12 pins.

[0040] **FIGS. 13, 14** and **15** show LED circuitry for indicating mode in a device having a EUSB connector.

[0041] **FIG. 16** shows a timing diagram to facilitate discussion of reset signal generation.

[0042] **FIGS. 17 and 18** show reset circuitry for use in resetting a device having a EUSB connector.

[0043] **FIGS. 19A, 19B** and **19**C illustrate respectively implementations using a single position double throw (SPDT) switch, a single pole single throw (SPST) switch, and another single pole single throw (SPST) switch to provide for write protect logic for a device having an EUSB connector.

## DETAILED DESCRIPTION OF VARIOUS EMBODIMENTS

[0044] The present invention relates to improvements in serial-bus connectors and sockets. The following description is presented to enable one of ordinary skill in the art to make and use the invention as provided in the context of a particular application and its requirements. Various modifications to the preferred embodiment will be apparent to those with skill in the art, and the general principles defined herein may be applied to other embodiments. Therefore, the present invention is not intended to be limited to the particular embodiments shown and described, but is to be accorded the widest scope consistent with the principles and novel features herein disclosed.

[0045] The inventors have realized that USB connectors and sockets are widely deployed. An extended or enhanced USB connector must fit in standard USB sockets, and an enhanced USB socket must accept standard USB connectors for backward compatibility. Since the height and width of USB connectors/sockets must remain the same for insertion compatibility, the length of each can be extended to fit additional metal contacts for additional signals.

[0046] The inventors have also realized that additional metal contacts may be placed on the opposite side of the pin substrates, opposite the existing four metal contact pins. These additional pins must not touch the metal housing or metal cover to prevent shorting to ground when the metal cover is grounded.

[0047] FIGS. 4A-I show a first embodiment of extended USB connectors and sockets having metal contact pins on both top and bottom surfaces of the pin substrates. In **FIG. 4A**, the extended connector has plastic housing **76** that the user can grip when inserting the connector plug into a socket. Pin substrate **70** supports metal contact pins **88** on the top surface. As shown, pins **88** are disposed in a row that is perpendicular to the longitudinal axis of the extended USB connector plug. Pin substrate **70** in an insulator such as ceramic, plastic, or other material. Metal leads or wires can pass through pin substrate **70** to connect metal contact pins **88** to wires inside plastic housing **76** that connect to the peripheral device.

[0048] Reverse-side metal contact pins **72** are placed in a recess in the bottom side of pin substrate **70** near the tip of the connector plug. Ribs can be added alongside contact pins **72** to further prevent shorting. Reverse-side metal contact pins **72** are additional pins for extended signals such as for PCI-Express signals. Metal leads or wires can pass through pin substrate **70** to connect reverse-side metal contact pins **72** to wires insides plastic housing **76** that connect to the peripheral device.

[0049] The length L**1** of pin substrate **70** is longer than the length L**2** of pin substrate **34** in the prior-art USB connector of **FIG. 3A**. The extension in length (L**1**-L**2**) can be 2-5 millimeters, for example. Reverse-side metal contact pins **72** are located mostly in the extension region beyond L**2**. Metal cover **73** is a rectangular tube that surrounds pin substrate **70** and has an pen end. An opening in metal cover **73** on the bottom of pin substrate **70** allows reverse-side metal contact pins **72** to be exposed.

[0050] **FIG. 4B** shows, in accordance with an embodiment of the present invention, an extended-USB socket having metal contact pins on both bottom and top surfaces on the pin substrate. Pin substrate **84** has metal contact pins **86** formed on a bottom surface facing a cavity that pin substrate **70** of the connector fits into. Pin substrate **84** also has lower substrate extension **85** that is not present on the prior-art USB socket, which has an L-shaped pin substrate.

[0051] Extension metal contact pins **80** are mounted on lower substrate extension **85** near the rear of the cavity. A bump or spring can be formed on extension metal contact pins **80**, such as by bending flat metal pads. This bump allows extension metal contact pins **80** to reach reverse-side metal contact pins **72** which are recessed in pin substrate **70** of the connector.

[0052] A cavity is formed by the bottom surface of pin substrate **84** and the top surface of lower substrate extension **85** and the back of pin substrate **84** than connects to lower substrate extension **85**. The depth D**1** of this cavity is greater than the depth D**2** of the prior-art USB socket of **FIG. 3B**. This extended depth allows for a standard, prior-art USB connector to be inserted into the cavity and not make electrical contact with extension metal contact pins **80**, preventing shorting. Metal cover **78** is a metal tube that covers pin substrate **84** and lower substrate extension **85**. Metal cover **73** of the USB connector fits in gaps **81** between metal cover **78** and the top and sides of pin substrate **84**. Mounting pin **82** can be formed on metal cover **78** for mounting the extended USB socket to a PCB or chassis.

[0053] **FIG. 4C** shows, in accordance with an embodiment of the present invention, the bottom surface of pin substrate **84**, which supports metal contact pins **86**. These four pins carry the prior-art USB differential signals, power, and ground, and make contact with metal contact pins **88** of the extended USB connector on the top surface of pin substrate **70**, shown in the embodiment of **FIG. 4D**. The length shown for pins **88** are illustrative only; as long as pins **88** can electrically contact with corresponding pins **86** in the extended USB receptacle (and with standard USB socket pins when the extended USB connector is inserted into a standard USB socket), these pins **88** can have any length.

[0054] The extended USB connector has 8 reverse-side metal contact pins **72** on the bottom surface of pin substrate **70**, arranged as shown in the embodiment of **FIG. 4D**. These make contact with extension metal contact pins **80**, arranged as shown in the embodiment of **FIG. 4C** on lower substrate extension **85**. These 8 extension pins carry extended signals, such as for PCI-Express.

[0055] **FIG. 4E** shows, in accordance with an embodiment of the present invention, the extended USB connector fully inserted into the extended USB socket. When fully inserted, the tip of pin substrate **70** fits into the cavity between pin substrate **84** and lower substrate extension **85** of the extended USB socket. On the upper surface of connector pin substrate **70**, metal contact pins **88** make contact with the four metal contact pins **86** of socket pin substrate **84**, while reverse-side metal contact pins **72** on the bottom surface of pin substrate **70** make contact with extension metal contact pins **80** on the top surface of lower substrate extension **85**.

[0056] Since reverse-side metal contact pins **72** are recessed, they do not make contact with metal cover **38** of the prior-art USB socket. Ribs can be added near and/or in between some or all of contact pins **72** to further prevent shorting. Both of these implementations are considered to be recessed implementations since the top of the ribs can be considered to be the top surface of the substrate. This prevents shorting of signals connected to reverse-side metal contact pins **72** to a ground connected to metal cover **38**.

[0057] **FIG. 4F** shows, in accordance with an embodiment of the present invention, the extended USB connector just before insertion into a standard USB socket. When fully inserted, as shown in the embodiment of **FIG. 4G**, the tip of pin substrate **70** fits under socket pin substrate **42**. On the upper surface of connector pin substrate **70**, metal contact pins **88** make contact with the four metal contact pins **44** of socket pin substrate **42**. Reverse-side metal contact pins **72** on the bottom surface of pin substrate **70** do not make contact with socket metal cover **38** since reverse-side metal contact pins **72** are recessed into the bottom surface of connector pin substrate **70** or when insulating ribs are provided. Thus only the four standard USB pins (metal contacts pins **44**, **88**) are electrically contacted.

[0058] **FIG. 4H** shows, in accordance with an embodiment of the present invention, a standard USB connector just before insertion into the extended USB socket. When fully inserted, as shown in the embodiment of **FIG. 4I**, the tip of connector pin substrate **34** fits under socket pin substrate **84**, but does not reach the back of the cavity. On the upper surface of connector pin substrate **34**, metal contact pins **32** make contact with the four metal contact pins **86** of socket pin substrate **84**. Extension metal contact pins **80** on the top of lower substrate extension **85** do not touch connector metal cover **33** since the depth of the extended USB socket is

greater than the length L2 of the prior-art USB connector. Thus only the four standard USB pins (metal contact pins **32**, **86**) are electrically contacted.

[**0059**] **FIG. 5A** shows, in accordance with an embodiment of the present invention, a block diagram of a host with an extended-USB socket that supports extended-mode communication. A variety of extended-USB or USB peripherals **168** may be plugged into extended-USB socket **166** of host **152**. For example, a SATA peripheral, a PCI-Express peripheral, A firewire IEEE 1394 peripheral, a Serial-Attached SCSI peripheral, or an USB-only peripheral could be inserted. Each can operate in its own standard mode.

[**0060**] Host **152** has processor system **150** for executing programs including USB-management and bus-scheduling programs. Multi-personality serial-bus interface **160** processes data from processor system **150** using various protocols. USB processor **154** processes data using the USB protocol, and inputs and outputs USB data on the USB differential data lines in extended USB socket **166**.

[**0061**] The extended metal contact pins in extended USB socket **166** connect to multi-personality bus switch **162**. Transceivers in multi-personality bus switch **162** buffer data to and from the transmit and receive pairs of differential data lines in the extended metal contacts for extended protocols such as PCI-Express, Firewire IEEE 1394, Serial-Attached SCSI, and SATA. When an initialization routine executed by processor system **150** determines that inserted peripheral **168** supports SATA, personality selector **164** configures multi-personality bus switch **162** to connect extended USB socket **166** to SATA processor **158**. When the initialization routine executed by processor system **150** determines that inserted peripheral **168** supports PCI-Express, personality selector **164** configures multi-personality bus switch **162** to connect extended USB socket **166** to PCI-Express processor **156**. Then processor system **150** communicates with either PCI-Express processor **156** or SATA processor **158** instead of USB processor **154** when extended mode is activated.

[**0062**] **FIG. 5B** shows, in accordance with an embodiment of the present invention, a block diagram of a peripheral with an extended-USB connector that supports extended-mode communication. Multi-personality peripheral **172** has extended USB connector **186** that could be plugged into extended-USB socket **166** of host **152** that has extended-mode communication capabilities such as SATA, 1394, SA-SCSI, or PCI-Express. Alternately, extended USB connector **186** of multi-personality peripheral **172** could be plugged into standard-USB socket **187** of host **188** that only supports standard USB communication.

[**0063**] Multi-personality peripheral **172** has processor system **170** for executing control programs including USB-peripheral-control and response programs. Multi-personality serial-bus interface **180** processes data from processor system **170** using various protocols. USB processor **174** processes data using the USB protocol, and inputs and outputs USB data on the USB differential data lines in extended USB connector **186**.

[**0064**] The extended metal contact pins in extended USB connector **186** connect to multi-personality bus switch **182**. Transceivers in multi-personality bus switch **182** buffer data to and from the transmit and receive pairs of differential data lines in the extended metal contacts for extended protocols such as PCI-Express, 1394, SA SCSI (also referred to herein as SAS), and SATA. When a control or configuration routine executed by processor system **170** determines that host **152** has configured multi-personality peripheral **172** for SATA, personality selector **184** configures multi-personality bus switch **182** to connect extended USB connector **186** to SATA processor **178**. When the initialization routine executed by processor system **170** determines that inserted peripheral **188** supports PCI-Express, personality selector **184** configures multi-personality bus switch **182** to connect extended USB connector **186** to PCI-Express processor **176**. Then processor system **170** communicates with either PCI-Express processor **176** or SATA processor **178** instead of USB processor **174** when extended mode is activated.

[**0065**] If a PCI Express device with an extended USB plug is plugged into a host system with a conventional USB receptacle, nothing will be recognized if the PCI Express device does not support USB. The host system will not see anything that has plugged into the system. The same is true for a SATA-only data, etc.

[**0066**] **FIG. 6** shows, in accordance with an embodiment of the present invention, a table of extended and standard pins in the extended USB connector and socket. The A side of the pin substrates contains the four standard USB signals, which include a 5-volt power signal and ground. The differential USB data D−, D+ are carried on pins **2** and **3**. These pins are not used for extended modes.

[**0067**] Side B of the pin substrates, or the extension of the primary surfaces, carries the extended signals. Pin **1** is a 3.3-volt power signal for PCI-Express, Serial-ATA, and IEEE1394, while pin **2** is a 1.5-volt supply for PCI-Express and reserved for others. Pin **8** is a 12-volt power supply for SATA, and IEEE1394 and reserved for PCI-Express. Pin **5** is a ground.

[**0068**] Pins **3** and **4** carry the transmit differential pair, called PETn, PETp, for PCI-Express, T−, T+ for SATA. They also carry the B differential pair, TPB*, TPB, for IEEE 1394. Pins **6** and **7** carry the receive differential pair, called PERn, PERp, for PCI-Express, R−, R+ for SATA. They also carry the A differential pair, TPA*, TPA, for IEEE 1394.

[**0069**] The ExpressCard pins REFCLK+, REFCLK−, CPPE#, CPUSB#, CLKREQ#, PERST#, and WAKE# are not used in the extended USB connector to reduce the pin count. Additional pins could be added to the extended USB connector and socket if some or all of these pins are desired. In the implementation of **FIG. 6**, the SAS (Serial Attached SCSI) may be implemented in an analogous manner as the SATA pins.

[**0070**] Extended-Length Substrate with Pins on Same Side—**FIGS. 7A-7H**.

[**0071**] FIGS. 7A-H show a second embodiment of extended USB connectors and sockets having metal contact pins on just one of the surfaces of the pin substrates. In **FIG. 7A**, the extended connector has plastic housing **96** that the user can grip when inserting the connector plug into a socket. Pin substrate **90** supports metal contact pins **100**, **101** on the top surface. Pin substrate **90** is an insulator such as ceramic, plastic, or other material. Metal leads or wires can pass through pin substrate **90** to connect metal contact pins **100**, **101** to wires inside plastic housing **96** that connect to the peripheral device.

[0072] The length of pin substrate **90** is longer than the length L**2** of pin substrate **34** in the prior-art USB connector of **FIG. 3A**. The extension in length can be 2-5 millimeters. Tip-end metal contact pins **101** are located mostly in the extension region beyond L**2**. Metal cover **93** is a rectangular or substantially rectangular tube that surrounds pin substrate **90** and has an open end.

[0073] In the example described below, pins **100** are for USB and pins **101** are for PCI-Express. It should be understood, however, that pins **101** may support any of the other protocols.

[0074] **FIG. 7B** shows, in accordance with an embodiment of the present invention, an extended-USB socket having metal contact pins on just one of the surfaces of the pin substrate. Pin substrate **104** has metal contact pins **106**, **107** formed on a bottom surface facing a cavity that pin substrate **90** of the connector fits into. Pin substrate **104** does not need the lower substrate extension of **FIGS. 4**, but can have the L-shape as shown.

[0075] Pins **107** are configured to contact with recessed pins in the pin substrate of the extended USB connector. For example, a bump or spring can be formed on extension metal contact pins **107**, such as by bending flat metal pads. As shown, pins **106** and **107** are formed in two parallel rows, both of which are perpendicular to the longitudinal axis of the socket. In other words, while individual pins may run parallel to the longitudinal axis of the socket, the row that is formed runs perpendicular to this longitudinal axis. Pins **106**, which carry USB signals, are disposed closer to the opening of the socket.

[0076] Metal cover **98** is a metal tube that covers pin substrate **104** and the opening underneath. Metal cover **93** of the USB connector fits in gaps **110** between metal cover **98** and the top and sides of pin substrate **104**. Mounting pin **102** can be formed on metal cover **98** for mounting the extended USB socket to a PCB or chassis.

[0077] **FIG. 7C** shows, in accordance with an embodiment of the present invention, the bottom surface of socket pin substrate **104**, which supports metal contact pins **106**, **107**. Primary metal contact pins **106**, which include the four USB pins, are in a first row of 4 pins that are closest to the socket opening. Secondary metal contact pins **107** are in a second row of 8 pins that are farthest from the socket opening.

[0078] The 8 extension signals are carried by the second row of pins, secondary metal contact pins **107**, which make contact with metal contact pins **101** of the plug. These 8 extension pins carry extended signals, such as for PCI-Express signals.

[0079] When the extended USB connector is fully inserted into the extended USB socket, the tip of pin substrate **90** fits into the cavity under pin substrate **104** of the extended USB socket. On the upper surface of connector pin substrate **90**, metal contact pins **100** make contact with the 4 metal contact pins **106** of socket pin substrate **104**, and metal contact pins **101** at the tip of the top surface of pin substrate **90** make contact with secondary extension metal contact pins **107** on the downward-facing surface of pin substrate **104**.

[0080] **FIG. 7E** shows, in accordance with an embodiment of the present invention, the extended USB connector just before insertion into a standard USB socket. When fully inserted, as shown in the embodiment of **FIG. 7F**, the tip of pin substrate **90** fits under socket pin substrate **42**. On the upper surface of connector pin substrate **90**, the metal contact pins **100** make contact with the four USB metal contact pins **44** of socket pin substrate **42**. The front end row of metal contact pins **101** do not make contact with any metal contacts since they are recessed on connector pin substrate **90**. Thus only the four standard USB pins (metal contact pins **44** and **100**) are electrically contacted.

[0081] **FIG. 7G**, shows, in accordance with an embodiment of the present invention, a standard USB connector just before insertion into the extended USB socket. When fully inserted, as shown in the embodiment of **FIG. 7H**, the tip of connector pin substrate **34** fits under socket pin substrate **104**, but does not reach the back of the socket cavity. On the upper surface of connector pin substrate **34**, metal contact pins **32** make contact with the four metal contact pins **106** of socket pin substrate **104**. Secondary metal contact pins **107** on substrate **104** do not touch connector metal cover **33** since the depth of the extended USB socket is greater than the length L**2** of the prior-art USB connector. Thus only the four standard USB pins (metal contact pins **32**, **106**) are electrically contacted. As can be seen, the extended USB connector and socket are electrically and mechanically compatible with standard prior-art USB sockets and connectors.

[0082] **FIG. 8**, in accordance with an embodiment of the present invention, is a flowchart of an initialization routine executed by a host for detecting a device plugged into an extended USB socket. A host such as a PC can have an extended USB socket. Either an extended USB device, or a standard USB device can be plugged into the extended USB socket. This routine detects whether the inserted device supports extended-USB mode or only standard USB mode. The routine may be executed by processor system **150** of **FIG. 5A**.

[0083] The host detects a newly inserted device plugged into the extended USB socket, step **200**, such as by detecting resistance changes on the metal contact pins of the extended USB socket. When the newly inserted device is detected, a USB reset command is sent over the USB differential signal lines to the device, step **202**. A USB read-status command is then sent by the host, step **204**.

[0084] The peripheral device responds by sending its status information using USB protocols. The host examines this status information, and in particular looks for a mode identifier indicating that the peripheral supports extended-USB mode. This mode identifier can be a status bit or a unique code in an area reserved for use by the peripheral vendor to identify the peripheral's type or capabilities.

[0085] When the peripheral responds with a status indicating no extended-USB support, step **206**, then processing continues in native USB mode, step **214**. Standard USB transactions are performed between the host and the peripheral using the differential USB data pins in the four-pin side of the extended USB socket. The peripheral likely has a standard USB connector that has only 4 metal contact pins, not the extension with the 8 additional metal contact pins.

[0086] When the peripheral responds with a status indicating extended-USB support, step **206**, then the host further examines the packet from the peripheral to determine that

the peripheral can support higher-speed communication using the extended metal contact pins, step **208**. The peripheral has an extended USB connector with the 8 additional metal contact pins in an extension portion of the connector.

[**0087**] The host can further examine the capabilities of the peripheral, such as to determine which extended modes are supported, step **210**. Some peripherals may support PCI-Express communication in extended mode, while others support Serial-ATA, Serial Attached SCSI, or IEEE 1394 as the extended-mode protocol.

[**0088**] The host then sends a vendor-defined USB OUT command to the peripheral, step **212**. This command instructs the peripheral to activate its extended mode of operation. The host verifies that the device received the command by reading its status again, step **216**. The peripheral responds with a ready status, step **218**. If the status read back from the device does not indicate that the peripheral is ready to switch to extended mode, step **220**, then the device fails, step **224**. The host could fall back on standard USB mode, step **214**, or attempt again to activate extended mode, step **202**. After trying a predetermined number of times, the host falls back on standard USB mode, step **214**.

[**0089**] When the peripheral responds with the correct ready, step **220**, then the host and peripheral can begin communicating in the extended mode. The 8 additional metal contact pins in the extended portion of the USB connector and socket are used for communication rather than the 4 USB metal contact pins. For example, the PCI-Express transmit and receive differential pairs can be used to bi-directionally send and receive data when the device has a PCI-Express personality. The host uses these extended pins to send a read-status command to the peripheral, step **222**. Data can be sent and received at the higher rates supported by PCI-Express rather than the slower USB rates.

[**0090**] **FIG. 9** shows, in accordance with an embodiment of the present invention, a flowchart of an initialization routine executed by a peripheral device plugged into an extended USB socket. A peripheral can have an extended USB connector that can be plugged into either an extended USB socket or a standard USB socket. This routine executes on the peripheral device and helps the host detect that the inserted device supports extended-USB mode. The routine may be executed by peripheral-device processor system **170** of **FIG. 5B**.

[**0091**] When the peripheral device is plugged into the USB socket, power is received though the power and ground pins on the 4-pin USB portion of the connector, step **226**. The peripheral device executes any initialization procedures to power itself up, step **228**, and waits for a reset command from the host, step **230**. Once the reset command is received from the host, the peripheral device resets itself, step **232**.

[**0092**] The peripheral device waits for further commands from the host, step **234**, such as a read-status command. The status read by the host, or further data read by the host can contain capability information about the peripheral device, such as which extended modes are supported, PCI-Express, SATA, IEEE 1394, SA SCSI, etc., step **236**. The reset and read-status commands are standard USB commands from the host.

[**0093**] The peripheral device then waits for a command from the host to enable extended-mode communications, step **238**. An enable command followed by another read-status command must be received, so that peripheral waits for the read-status command, step **240**. Once the read-status command is received, the peripheral responds with an OK or READY status to indicate that it is ready to switch to using the extended metal contact pins on the connector, step **242**.

[**0094**] Then the peripheral device switches its bus transceivers to match the bus-protocol specified by the host to be able to communicate over the 8 extension metal contact pins, step **244**. The 4 USB metal contact pins are not used. The peripheral device waits for a read-status command sent by the host over the extended metal contact pins and responds to this read-status command, step **246**, initializing for the new protocol mode. The peripheral device can then receive extended commands such as PCI-Express commands that are received over the extended metal contact pins on the extended portion of the connector, such as the PCI-Express transmit and receive differential lines, step **248**.

[**0095**] For single mode, the USB pins can be removed. For example, pins **88** in **FIG. 4A and 4C** and pins **86** in **FIG. 4B and 4D** can be removed. They do not absolutely have to be removed though because if no trace is connected to them, these pins will not do any harm.

[**0096**] **FIG. 10** shows, in accordance with an embodiment of the present invention, a flowchart of an initialization routine executed by a single or one-sided multi mode host for detecting a device plugged into an extended USB socket. Single mode means only 1 mode, excluding the conventional USB mode. One-sided multi mode means that in the extended connectors **72** in **4A**, there are multiple modes supported. A host such as a PC can have an extended USB socket. Either an extended USB device, or a single mode device can be plugged into the extended USB socket. Connectors **88** in **FIG. 4A** can be saved. If these connectors physically exist, then they are not employed when the host communicates using a non-USB (extended) mode.

[**0097**] This routine figures out which mode should be used for communication. The routine may be executed by a dedicated state machine or a microcontroller (not shown in **FIG. 5A**).

[**0098**] A timer is implemented in firmware or hardware. When the timer expires, step **130**, this routine is executed. It sends a reset command to the EUSB (extended USB) connectors (which may or may not have a device plugged in) in the current highest priority mode, step **131**. Then it sends read status command to the connectors, step **132**. If the device does not exist or does not respond, it will figure out if all of its modes are exhausted or not, step **134**. If they are not exhausted, then it will send the reset command with the next priority mode, step **131** again, etc. If they are exhausted, then it jumps to restart the timer again and wait for the timer to expire, step **130** again.

[**0099**] If the device respond, that means the device can talk in the current mode. The microcontroller will interrupt the CPU and send the device status packet back to the CPU, step **135**. The host CPU will load the appropriate device driver and start using this mode to communicate to the device directly, step **136**.

[**0100**] **FIG. 11** shows, in accordance with an embodiment of the present invention, a flowchart of an initialization routine executed by a single mode peripheral device plugged

into an extended USB socket. A peripheral can have an extended USB connector that can be plugged into an extended USB socket. This routine executes on the peripheral device. The routine may be executed by peripheral-device processor system **170** of **FIG. 5B**.

[**0101**] When the peripheral device is plugged into the USB socket, power is received though the power and ground pins on the 8-pin extended portion of the connector, step **140**. The peripheral device executes any initialization procedures to power itself up, step **141**, and waits for a reset command from the host, step **142**. Once the reset command is received from the host, the peripheral device resets itself, step **143**.

[**0102**] The peripheral device waits for further commands from the host, **144**, such as a read-status command. The device will respond to this command using its only mode, step **145**.

[**0103**] Several other embodiments are contemplated by the inventors. For example, a variety of materials may be used for the connector substrate, circuit boards, metal contacts, metal case, etc. Plastic cases can have a variety of shapes and may partially or fully cover different parts of the circuit board and connector, and can form part of the connector itself. Various shapes and cutouts can be substituted. Pins can refer to flat metal leads or other contactor shapes rather than pointed spikes. The metal cover can have the clips and slots that match prior-art USB connectors.

[**0104**] **FIG. 12** shows, in accordance with an embodiment of the present invention, an arrangement that reduced 2 pins, as compared to the implementation of **FIG. 6**. In the embodiment of **FIG. 12**, the SAS pins may be implemented in an analogous manner as SATA. Other embodiments that increase or decrease the number of secondary pins are also possible.

[**0105**] ExpressCard can use the same mechanism described above to include SATA, SAS and 1394. They can be overlapped with the PCI Express signals.

[**0106**] A third embodiment of extended-function USB connectors and sockets using extended pins on a pivoting substrate attached to the socket's pin substrate can be used. The length and depth do not have to be extended in this embodiment, or can be extended less than the embodiments of **FIGS. 4, 7**.

[**0107**] The connector can have plastic housing that the user can grip when inserting the connector plug into a socket. Pin substrate supports metal contact pins on the top surface. Pin substrate is an insulator such as ceramic, plastic, or other material. Metal leads or wires can pass through pin substrate to connect metal contact pins to wires inside plastic housing that connect to the peripheral device.

[**0108**] Reverse-side metal contact pins are placed in a recess in the bottom side of pin substrate near the tip of the connector plug and can have raised ribs on each side to prevent contact with the spring-like clips on the metal cover of the standard USB socket. Reverse-side metal contact pins are additional pins for extended signals such as for PCI-Express signals. Metal leads or wires can pass through pin substrate to connect reverse-side metal contact pins to wires inside plastic housing that connect to the peripheral device.

[**0109**] The length of pin substrate can be the same as the length L**2** of pin substrate **34** in the prior-art USB connector of **FIG. 3A**, or can be slightly longer. Reverse-side metal contact pins are located near the tip of the connector plug. Hole or notch is also provided on the reverse-side, but farther back from the tip of the plug. Two notches can be provided.

[**0110**] Metal cover is a rectangular tube that surrounds pin substrate and has an open end. A large opening or several smaller openings in metal cover on the bottom of pin substrate allows reverse-side metal contact pins and notches to be exposed.

[**0111**] An extended-USB socket can have retractable metal contact pins on the lower surface of the pin substrate. Pin substrate has metal contact pins formed on a cavity-top surface facing downward to a cavity that pin substrate of the connector fits into. Pin substrate also has lower substrate extension that is not present on the prior-art USB socket, which has an L-shaped pin substrate.

[**0112**] Extension metal contact pins are mounted on lower substrate extension near the rear of the cavity. A bump or spring can be formed on extension metal contact pins, such as by bending flat metal pads. This bump allows extension metal contact pins to reach reverse-side metal contact pins which are recessed in pin substrate of the connector.

[**0113**] Extension metal contact pins are mounted on a small, pivoting substrate that is connected to or part of a mechanical switch. A bend or bump near the socket-opening end of a mechanical switch is depressed by a connecter inserted into the socket opening. As the mechanical switch is depressed, one end of pivoting substrate is pushed downward, causing extension metal contact pins to pivot downward. Extension metal contact pins do not make contact with metal cover when the mechanical switch is depressed. This pivoting caused by the mechanical switch prevents extension metal contact pins from shorting to the metal cover on a standard USB connector.

[**0114**] A cavity is formed by the bottom surface of the pin substrate and the top surface of lower substrate extension and the back of the pin substrate that connects to the lower substrate extension. The depth of this cavity can be the same or somewhat greater than the depth D**2** of the prior-art USB socket of **FIG. 3B**. Metal cover is a metal tube that covers the pin substrate and the lower substrate extension. Metal cover of the USB connector fits in gaps between the metal cover and the top and sides of pin substrate. Mounting pin can be formed on the metal cover for mounting the extended USB socket to a PCB or chassis.

[**0115**] Rather than use PCI-Express, the extended USB connector/socket can use serial ATA, Serial Attached SCSI, or Firewire IEEE 1394 as the second interface. The host may support various serial-bus interfaces as the standard interface, and can first test for USB operation, then IEEE 1394, then SATA, then SA SCSI, etc, and later switch to a higher-speed interface such as PCI-Express. During extended mode when the 8 extended contacts are being used for the extended protocol, the 4 USB contacts can still be used for USB communication. Then there are two communication protocols that the host can use simultaneously.

[**0116**] In the examples, USB serial A plugs and receptacles are shown. However, the invention is not limited to

Series A. Series B, Series mini-B, or Series mini-AB can be substituted. Series B uses both upper and lower sides of in the pin substrate for the USB signals. The left-side and right-side of the pin substrate can be used for the additional 8 pins. Series mini-B and Series mini-AB use the top side of the pin substrate for the USB signals. The additional 8 pins can be placed on the bottom side of the pin substrate **34** for these types of connectors. The extended USB connector, socket, or plug can be considered a very-high-speed USB connector (VUSB) connector since the higher data-rates of PCI-Express or other fast-bus protocols are supported with a USB connector.

[**0117**] A special LED can be designed to inform the user which electrical interface is currently in use. For example, if the standard USB interface is in use, then this LED can be turned on. Otherwise, this LED is off. If more than 2 modes exists, then a multi-color LED can be used to specify the mode, such as green for PCI-Express and yellow for standard USB.

[**0118**] For example, if a device such as an Express Card can communicate using either the USB or PCI Express mode, a hardware switch may be employed to select the mode, and an LED Logic circuit may indicate the communication mode to the user. **FIG. 13** shows one such implementation. The basic LED circuit includes a photo LED, current limiting resistor and a buffer within the controller. The LED will be on whenever there is a current flowing across it from the cathode to anode. The detect and LED buffer may be implemented with general purpose input/output (GPIO) port, for example.

[**0119**] In **FIG. 13**, the USB mode is selected with SW**1** switched to VCC; whereas PCI Express mode is selected with SW**1** switched to ground. The selected mode is then stored to configuration register REG**1** via the detect circuit. As shown, there are two LEDs for mode indication, i.e. LED **1830** will be turned on when USB mode is selected. Otherwise, LED **1820** will be on for PCI Express mode.

[**0120**] Alternatively, hardware strapping may be employed to indicate the communication mode of such multi-protocol capable device. **FIG. 14** shows one implementation of hardware strapping. As a further alternative, the mode of protocol may be directly programmed into configuration without the need for hardware switch. During the device configuration stage, the software may store the mode setting from auto mode detection (if the device has an intelligent algorithm to determine the proper mode) or may download the mode setting from a non-volatile storage device, for example. As a further alternative, the LED circuit portion of **FIG. 13** may be implemented by the LED circuit of **FIG. 15** wherein the device controller sources current into the LED when the buffer output is driven high.

[**0121**] There are times when it may be desirable to generate a clean reset signal for the peripheral device. For example, if the power supply voltage drops below a threshold voltage, it may be desirable to assert a reset signal and keep the reset signal asserted for some time interval (Td) after the power supply voltage rises above the threshold voltage to give the multi-personality device time to stabilize itself (see **FIG. 16**). One way to implement the reset circuit involves an RC circuit, such as that shown in **FIG. 17**. However, it is also possible to implement the reset circuit using a voltage comparator if more precision is desired. In the voltage comparator implementation of **FIG. 18**; the divided supply voltage (Vp) is compared to the threshold voltage (Vth), and the reset signal is asserted whenever Vp is below Vth. The reset output may be either active high or active low. The reset output may be configured as either push/pull or open drain.

[**0122**] In some cases, it may be desirable to endow the peripheral device with user-settable write-protect indication to prevent the unitentionally alteration of the information, such as information stored in storage device (e.g., removable flash media). An implementation of the write protect logic may include a write protect switch and a detect circuit.

[**0123**] In one embodiment, the user may manually set the write protect switch to produce to the detect circuit two electrical polarities, i.e. enable or disable. The detect circuit normally may be an input port or general purpose input/output (GPIO) port of the device controller. The detected polarity is then used to instruct the processor to govern the write behavior to the storage subsystem of the peripheral device. In other words, the write access is prohibited if the write protect switch is enabled; otherwise the write access is allowed. **FIGS. 19A, 19B** and **19**C illustrate respectively implementations using a single pole double throw (SPDT) switch, a single pole single throw (SPST) switch whereby the pull up resistor sets the default polarity as high, and single pole single throw (SPST) switch whereby a pull down resistor sets the default polarity as low.

[**0124**] Alternative implementations to those explicitly discussed above are also possible. For example, the pivoting substrate can pivot along a hinge or other connection at the back of the socket, or can have a spring or springs under it that are depressed, causing the pivoting substrate to move downward in a more parallel and less pivoting manner. Other variations and exact implementations are possible.

[**0125**] The longer metal contact pins on the edges can be used to carry ground, while the shorter metal contact pins in the middle can be used to carry power and other signals, such as shown in **FIG. 4D**. The longer metal contact pins make contact first, allowing ground to be connected before power. This improved hot-plug reliability.

[**0126**] Applications can include flash drives, USB connectors on desktop computers, notebook computers, Pocket PCs, Handy Terminals, Personal Communications, PDA's, digital cameras, cellular phones with or without digital cameras, TV set-top boxes, MP3, MPEG4, copiers, printers, and other electronic devices. Such devices may use to advantage the higher speed offered by the extended modes of the extended USB connectors and sockets, and may reduce size and space together with lower cost compared with larger card-type or dual-plug connectors. Legacy USB devices and hosts are supported, so the extended hosts and peripherals can freely operate with other legacy peripherals and hosts using standard USB mode.

[**0127**] Additional metal contacts can be added to the new connectors and sockets. These additional metal contacts can serve as power, ground, and/or I/O pins which are further extensions to the USB specification, or PCI Express or other specifications. Greater power capability can be obtained with (or without) additional power and ground pins (or by a higher power supply current of the exiting power pin). Multiple power supplies can also be provided by the addi-

tional power and ground pins. The improved power supply capabilities allow more devices and/or more memory chips to be powered.

[0128] Extra I/O pins can be added for higher bandwidth and data transfer speeds. The additional I/O pins can be used for multiple-bit data I/O communications, such as 2, 4, 8, 12, 16, 32, 64, . . . bits. By adopting some or all of these new features, performance of hosts and peripheral devices can be significantly improved. These additional pins could be located behind or adjacent to the existing USB pins, or in various arrangements. The additional pins could be applied to male and female connectors.

[0129] To reduce the number of extended pins, the four original USB pins can be shared. One embodiment has a total of 10 pins. Two of the differential signal pins for PCI-Express, Serial-ATA, and IEEE 1394 can be shared with the 2 differential data pins of USB. The same scheme can be applied to the ExpressCard connector. There is no change for the 4 pins related to USB. For the PCI Express signals, only PETn, PETp, PERn and PERp need to be modified to include the corresponding signals for 1394, SATA and SA-SCSI. Other PCI-related signals can be mapped also.

[0130] Clock signals such as REFCLK+ and REFCLK− are important signals to add if additional pins are available. If even more pins are available, the side band signals in ExpressCard can be added, like CPPE#, CPUSB#, CLKREQ#, PERST#, WAKE#, +3.3AUX, SMBDATA, SMBCLK, etc.

[0131] The approach of using the modified PCI Express signals can be applied to the designs of the fully buffered memory modules of DRAMs.

[0132] One alternative to double the transfer bandwidth of the USB is to increase the USB clock frequency from 480 MHz to 960 MHz. This alternative does not need any additional pin. Nothing needs to be changed for the USB mechanical standard.

[0133] Another alternative to double the transfer bandwidth of USB is described below. Refer to **FIG. 4C**, the additional 8 pins can be reduced to a minimum of 2 pins. These additional 2 pins can be used to carry another differential pair of data for the USB. With 2 pairs of differential data lines, the transfer speed can be doubled.

[0134] Any advantages and benefits described may not apply to all embodiments of the invention. When the word "means" is recited in a claim element, Applicant intends for the claim element to fall under 35 USC Sect. 112, paragraph 6. Often a label of one or more words precedes the word "means". The word or words preceding the word "means" is a label intended to ease referencing of claims elements and is not intended to convey a structural limitation. Such means-plug-function claims are intended to cover not only the structures described herein for performing the function and their structural equivalents, but also equivalent structures. For example, although a nail and a screw have different structures, they are equivalent structures since they both perform the function of fastening. Claims that do not use the word "means" are not intended to fall under 35 USC Sect. 112, paragraph 6. Signals are typically electronic signals, but may be optical signals such as can be carried over a fiber optic line.

[0135] The foregoing description of the embodiments of the invention has been presented for the purposes of illustration and description. It is not intended to be exhaustive or to limit the invention to the precise form disclosed. Many modifications and variations are possible in light of the above teaching. It is intended that the scope of the invention be limited not by this detailed description, but rather by the claims appended hereto.

**1-58**. (canceled)

**59**. A host computer, comprising:

a host processor;

a set of protocol processors having at least a first protocol processor and a second protocol processor, said set of protocol processors being operatively coupled to communicate with said host processor, said first protocol processor being configured to process a first protocol and said second protocol processor being configured to process a second protocol different from said first protocol; and

an extended Universal-Serial-Bus (USB) socket configured to facilitate communication between said host processor and an external device configured to be detachably coupled with said extended USB socket, including

an extended cavity having an extended cavity length longer than a length of a cavity of an industry-standard Series A USB socket, said length of said cavity of said industry-standard Series A USB socket being about 9 mm;

a plurality of USB socket contacts arranged in a first socket-pin row in a direction perpendicular to a longitudinal axis of said extended USB socket, said plurality of USB socket contacts being disposed in said cavity and configured to carry USB signals; and

a plurality of non-USB socket contacts arranged in a second socket-pin row parallel to said first socket-pin row, said plurality of non-USB socket contacts being configured to carry non-USB signals;

wherein said extended USB socket is configured to be mechanically and electrically compatible with both an industry-standard Series A USB connector and an extended USB connector, said extended USB connector including an extended pin substrate having an extended substrate length longer than a length of a pin substrate of said industry-standard Series A USB connector, said length of said pin substrate of said industry-standard Series A USB connector being about 12 mm, and a plurality of USB connector contacts supported by said extended pin substrate and arranged in a first connector-pin row in a direction perpendicular to a longitudinal axis of said extended USB connector, said plurality of USB connector contacts being configured to carry said USB signals, and a plurality of non-USB connector contacts supported by said extended pin substrate and arranged in a second connector-pin row parallel to said first connector-pin row, said plurality of non-USB connector contacts being configured to carry said non-USB signals, and wherein when said extended USB socket couples with said industry-standard Series A USB connector, said plurality of non-USB socket

contacts are configured such that said plurality of non-USB socket contacts do not electrically contact either USB pins in said industry-standard Series A USB connector or a metal cover of said industry-standard Series A USB connector, and wherein said plurality of non-USB socket contacts being disposed in a position that is on an opposite substrate side relative to said plurality of USB socket contacts, thereby preventing said plurality of non-USB socket contacts from electrically coupling with said plurality of USB connector contacts configured to carry said USB signals in said industry-standard Series A USB connector when said industry-standard Series A USB connector is fully inserted into said extended USB socket.

**60**. The host computer of claim 59 wherein said first protocol is USB, said first protocol processor receives communication from said external device when said external device communicates in said first protocol irrespective whether said external device employs said industry-standard Series A USB connector or said extended USB connector.

**61**. The host computer of claim 59 further comprising a multi-personality bus switch operatively coupled to said plurality of non-USB socket contacts and said second protocol processor, said multi-personality bus switch being configured to transmit said non-USB signals received via said plurality of non-USB socket contacts to said second protocol processor if said external device communicates using said second protocol, said second protocol represents one of PCI-EX, SATA, SAS, and 1394.

**62**. The host computer of claim 61 wherein said set of protocol processors further includes a third protocol processor operatively coupled to communicate with said host processor, said third protocol processor being configured to process a third protocol different from said first protocol and said second protocol, said third protocol represents another one of said PCI-EX, said SATA, and SAS, and said 1394, said multi-personality bus switch being coupled with said third protocol processor, said multi-personality bus switch being configured to transmit said non-USB signals received via said plurality of non-USB socket contacts to said third protocol processor if said external device communicates using said third protocol.

**63**. The host computer of claim 61 wherein said first socket-pin row is disposed on a first interior wall of said extended cavity and said second socket-pin row is disposed on at least one of said first interior wall of said extended cavity and a second interior wall of said extended cavity that is opposite said first interior wall, wherein said first socket-pin row consists of four pins and said second socket-pin row consists of at least one of 8 pins and 6 pins.

**64**. The host computer of claim 62 further comprising a software personality selector circuit coupled to said multi-personality bus switch, said software personality selector circuit being configured to configure said multi-personality bus switch, responsive to said host computer receiving said non-USB signals, to employ one of said second protocol processor or said third protocol processor for communication, said non-USB signals are configured to be analyzed by said host processor to ascertain a personality of said external device, a result of an analysis of said non-USB signals enabling said software personality selector circuit to configure said multi-personality bus switch for said communication.

**65**. A method for facilitating communication with a peripheral device, comprising:

providing a host computer including

providing a host processor;

providing a set of protocol processors having at least a first protocol processor and a second protocol processor, said set of protocol processors being operatively coupled to communicate with said host processor, said first protocol processor being configured to process a first protocol and said second protocol processor being configured to process a second protocol different from said first protocol; and

providing an extended Universal-Serial-Bus (USB) socket configured to facilitate communication between said host processor and an external device configured to be detachably coupled with said extended USB socket, said extended USB socket including

an extended cavity having an extended cavity length longer than a length of a cavity of an industry-standard Series A USB socket, said length of said cavity of said industry-standard Series A USB socket being about 9 mm;

a plurality of USB socket contacts arranged in a first socket-pin row in a direction perpendicular to a longitudinal axis of said extended USB socket, said plurality of USB socket contacts being disposed in said cavity and configured to carry USB signals; and

a plurality of non-USB socket contacts arranged in a second socket-pin row parallel to said first socket-pin row, said plurality of non-USB socket contacts being configured to carry non-USB signals;

wherein said extended USB socket is configured to be mechanically and electrically compatible with both an industry-standard Series A USB connector and an extended USB connector, said extended USB connector including an extended pin substrate having an extended substrate length longer than a length of a pin substrate of said industry-standard Series A USB connector, said length of said pin substrate of said industry-standard Series A USB connector being about 12 mm, and a plurality of USB connector contacts supported by said extended pin substrate and arranged in a first connector-pin row in a direction perpendicular to a longitudinal axis of said extended USB connector, said plurality of USB connector contacts being configured to carry said USB signals, and a plurality of non-USB connector contacts supported by said extended pin substrate and arranged in a second connector-pin row parallel to said first connector-pin row, said plurality of non-USB connector contacts being configured to carry said non-USB signals, and wherein when said extended USB socket couples with said industry-standard Series A USB connector, said plurality of non-USB socket contacts are configured such that said plurality of non-USB socket contacts do not electrically contact either USB pins in said industry-standard Series A USB connector or a metal cover of said industry-standard Series A USB connector, and wherein said plurality of

non-USB socket contacts being disposed in a position that is on an opposite substrate side relative to said plurality of USB socket contacts, thereby preventing said plurality of non-USB socket contacts from electrically coupling with said plurality of USB connector contacts configured to carry said USB signals in said industry-standard Series A USB connector when said industry-standard Series A USB connector is fully inserted into said extended USB socket.

**66**. The method of claim 65 further comprising:

providing a multi-personality bus switch operatively coupled to said plurality of non-USB socket contacts and said second protocol processor, said multi-personality bus switch being configured to transmit said non-USB signals received via said plurality of non-USB socket contacts to said second protocol processor if said external device communicates using said second protocol.

**67**. The method of claim 66 wherein said first protocol is USB and said second protocol represents a non-USB protocol including one of PCI-EX, SATA, SAS, and 1394.

**68**. The method of claim 67 further comprising:

sending a USB reset command from said host computer to said peripheral device;

sending a USB read status command from said host computer to said peripheral device;

receiving status information from said peripheral device;

examining, using said host processor, whether there exists mode identification data indicating that said peripheral device support said non-USB protocol;

instructing, if said mode identification data indicates that said peripheral device supports said non-USB protocol, said peripheral device to initiate communication using said non-USB protocol;

receiving ready status data from said peripheral device responsive to said instructing said peripheral device to initiate said communication using said non-USB protocol;

employing, if said ready status data indicates that said peripheral device is ready to communicate using said non-USB protocol, said second protocol processor to communicate with said peripheral device using said non-USB protocol; and

performing, is said ready status data fails to indicate that said peripheral device is ready to communicate using said non-USB protocol, one of communicating using USB protocol and attempting to enable said peripheral device to communicate in said non-USB protocol.

**69**. The method of claim 67 wherein said first socket-pin row is disposed on a first interior wall of said extended cavity and said second socket-pin row is disposed on at least one of said first interior wall of said extended cavity and a second interior wall of said extended cavity that is opposite said first interior wall.

**70**. A peripheral device, comprising:

a device processor;

a set of protocol processors having at least a first protocol processor and a second protocol processor, said set of protocol processors being operatively coupled to communicate with said device processor, said first protocol processor being configured to process a first protocol and said second protocol processor being configured to process a second protocol different from said first protocol; and

an extended Universal-Serial-Bus (USB) connector configured to facilitate communication between said device processor and a host computer configured to be detachably coupled with said extended USB connector, including

an extended pin substrate having an extended substrate length longer than a length of a pin substrate of an industry-standard Series A USB connector, said length of said pin substrate of said industry-standard Series A USB connector being about 12 mm;

a plurality of USB connector contacts supported by said extended pin substrate and arranged in a first connector-pin row in a direction perpendicular to a longitudinal axis of said extended USB connector, said plurality of USB connector contacts being configured to carry USB signals; and

a plurality of non-USB connector contacts supported by said extended pin substrate and arranged in a second connector-pin row parallel to said first connector-pin row, said plurality of non-USB connector contacts being configured to carry non-USB signals;

wherein said extended USB connector is configured to mechanically and electrically compatible with both an industry-standard Series A USB socket and an extended USB socket, said extended USB socket including an extended cavity having an extended cavity length longer than a length of a cavity of said industry-standard Series A USB socket, said length of said cavity of said industry-standard Series A USB socket being about 9 mm, and a plurality of USB socket contacts arranged in a first socket-pin row in a direction perpendicular to a longitudinal axis of said extended USB socket, said plurality of USB socket contacts being disposed in said cavity and configured to carry said USB signals, and a plurality of non-USB socket contacts arranged in a second socket-pin row parallel to said first socket-pin row, said plurality of non-USB socket contacts being configured to carry said non-USB signals, and wherein when said extended USB connector couples with said industry-standard Series A USB socket, said plurality of non-USB connector contacts are configured such that said plurality of non-USB connector contacts do not electrically contact either USB pins in said industry-standard Series A USB socket or a metal cover of said industry-standard Series A USB socket, and wherein said plurality of non-USB connector contacts being disposed in a position that is on an opposite substrate side relative to said plurality of USB connector contacts, thereby preventing said plurality of non-USB connector contacts from electrically coupling with said plurality of USB socket contacts configured to carry said USB signals in said industry-standard Series A USB socket when said extended USB connector is fully inserted into said industry-standard Series A USB socket.

**71**. The peripheral device of claim 70 wherein said first protocol is USB, said first protocol processor receives com-

munication from said host computer when said host computer communicates in said first protocol irrespective whether a external device employs said industry-standard Series A USB socket or said extended USB socket.

**72**. The peripheral device of claim 70 further comprising a multi-personality bus switch operatively coupled to said plurality of non-USB connector contacts and said second protocol processor, said multi-personality bus switch being configured to transmit said non-USB signals received via said plurality of non-USB connector contacts to said second protocol processor if said host computer communicates using said second protocol, said second protocol represents one of PCI-EX, SATA, SAS, and 1394.

**73**. The peripheral device of claim 72 wherein said set of protocol processors further includes a third protocol processor operatively coupled to communicate with said device processor, said third protocol processor being configured to process a third protocol different from said first protocol and said second protocol, said third protocol represents another one of said PCI-EX, said SATA, said SAS, and said 1394, said multi-personality bus switch being coupled with said third protocol processor, said multi-personality bus switch being configured to transmit said non-USB signals received via said plurality of non-USB connector contacts to said third protocol processor if said host computer communicates using said third protocol, said non-USB signals are analyzed by said device processor to ascertain a personality of said host computer, a result of an analysis of said non-USB signals enabling a software personality selector circuit, which is coupled to said multi-personality bus switch, to configure said multi-personality bus switch to employ one of said second protocol processor or said third protocol processor for communication.

**74**. The peripheral device of claim 72 wherein said first connector-pin row is disposed on a first side of said extended pin substrate and said second connector-pin row is disposed on at least one of said first side of said extended pin substrate and a second side of said extended pin substrate that is opposite said first side of said extended pin substrate, wherein said first connector-pin row consists of four pins and said second connector-pin row consists at least one of 8 pins and 6 pins.

**75**. The peripheral device of claim 72 wherein said second connector-pin row is recessed below a surface of said extended pin substrate.

**76**. The peripheral device of claim 72 further comprising:

a mode light emitting diode (LED) for indicating which protocol is currently employed for communication by said peripheral device;

a reset circuit for resetting said peripheral device; and

a write-protect mechanism, said write-protect mechanism, when activated, prevents a user from inadvertently writing to said peripheral device.

**77**. A method for facilitating communication with a host computer, comprising:

providing a peripheral device including

providing a device processor;

providing a set of protocol processors having at least a first protocol processor and a second protocol processor, said set of protocol processors being operatively coupled to communicate with said device processor, said first protocol processor being configured to process a first protocol and said second protocol processor being configured to process a second protocol different from said first protocol; and

providing an extended Universal-Serial-Bus (USB) connector configured to facilitate communication between said device processor and said host computer that is configured to be detachably coupled with said extended USB connector, said extended USB connector including

an extended pin substrate having an extended substrate length longer than a length of a pin substrate of an industry-standard Series A USB connector, said length of said pin substrate of said industry-standard Series A USB connector being about 12 mm;

a plurality of USB connector contacts supported by said extended pin substrate and arranged in a first row in a direction perpendicular to a longitudinal axis of said extended USB connector, said plurality of USB connector contacts being configured to carry USB signals; and

a plurality of non-USB connector contacts supported by said extended pin substrate and arranged in a second row parallel to said first row, said plurality of non-USB connector contacts being configured to carry non-USB signals;

wherein said extended USB connector is configured to mechanically and electrically compatible with both an industry-standard Series A USB socket and an extended USB socket, said extended USB socket including an extended cavity having an extended cavity length longer than a length of a cavity of said industry-standard Series A USB socket, said length of said cavity of said industry-standard Series A USB socket being about 9 mm, and a plurality of USB socket contacts arranged in a first socket-pin row in a direction perpendicular to a longitudinal axis of said extended USB socket, said plurality of USB socket contacts being disposed in said cavity and configured to carry said USB signals, and a plurality of non-USB socket contacts arranged in a second socket-pin row parallel to said first socket-pin row, said plurality of non-USB socket contacts being configured to carry said non-USB signals, and wherein when said extended USB connector couples with said industry-standard Series A USB socket, said plurality of non-USB connector contacts are configured such that said plurality of non-USB connector contacts do not electrically contact either USB pins in said industry-standard Series A USB socket or a metal cover of said industry-standard Series A USB socket, and wherein said plurality of non-USB connector contacts being disposed in a position that is on an opposite substrate side relative to said plurality of USB connector contacts, thereby preventing said plurality of non-USB connector contacts from electrically coupling with said plurality of USB socket contacts configured to carry said USB signals in said industry-standard Series A USB socket when said extended USB connector is fully inserted into said industry-standard Series A USB socket.

**78**. The method of claim 77 further comprising:

providing a multi-personality bus switch operatively coupled to said plurality of non-USB connector contacts and said second protocol processor, said multi-personality bus switch being configured to transmit said non-USB signals received via said plurality of non-USB connector contacts to said second protocol processor if said host computer communicates using said second protocol, wherein said first protocol is USB and said second protocol represents a non-USB protocol including one of PCI-EX, SATA, SAS, and 1394.

**79**. The method of claim 78 further comprising:

receiving a USB reset command from said host computer;

receiving a USB read status command from said host computer; and

responding to said host computer with status information, including mode identification data indicating that said peripheral device supports said non-USB protocol.

**80**. The method of claim 78 further comprising

receiving an extended mode enable command from said host computer, said extended mode enable command enabling said peripheral device to communicate in said non-USB protocol;

receiving a read status command from said host computer;

responding to said host computer with a ready status signal indicating to said host computer that said peripheral device could be communicating using said non-USB protocol and via said plurality of non-USB connector contacts;

configuring said multi-personality bus switch to enable said second protocol processor to be employed for communication using said non-USB protocol; and

initializing said peripheral device for said communication using said non-USB protocol.

**81**. The method of claim 78 wherein a first connector-pin row is disposed on a first side of said extended pin substrate and a second connector-pin row are disposed on at least one of said first side of said extended pin substrate and a second side of said extended pin substrate that is opposite said first side, said second connector-pin row is recessed below a surface of said extended pin substrate, said first connector-pin row consists of four pins and said second connector-pin row consists of 6 pins.

**82**. The method of claim 78 further comprising:

providing a mode light emitting diode (LED) for indicating which protocol is currently employed for communication by said peripheral device;

providing a reset circuit for resetting said peripheral device; and

providing a write-protect mechanism, said write-protect mechanism, when activated, prevents an unauthorized user from inadvertently writing to said peripheral device.

* * * * *