(No Model.)

C. RUSS.

SCOURING AND FANNING MILL FOR CLEANING GRAIN.

No. 456,207. Patented July 21, 1891.

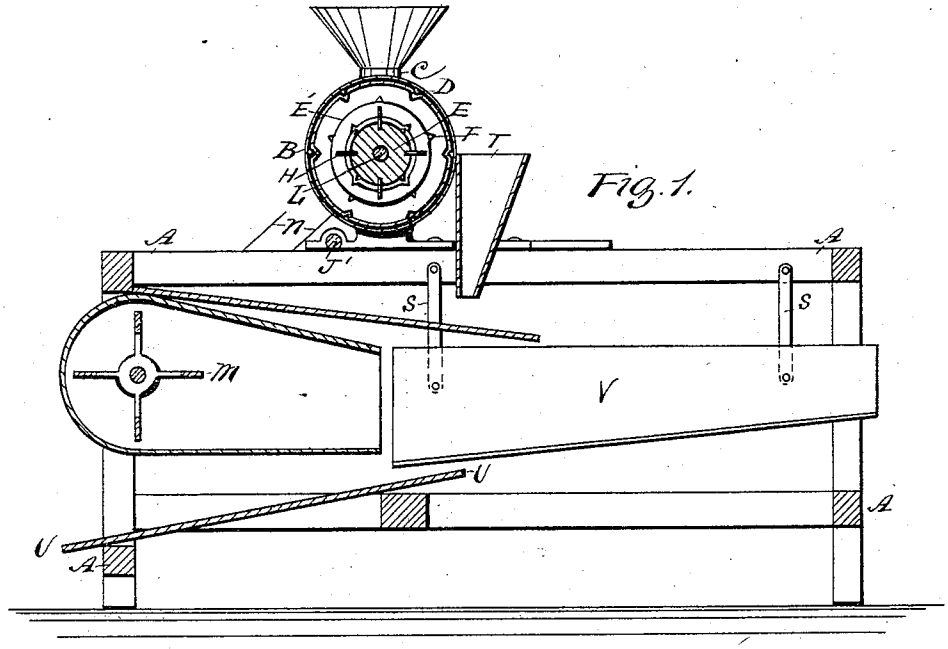

Fig. 1.

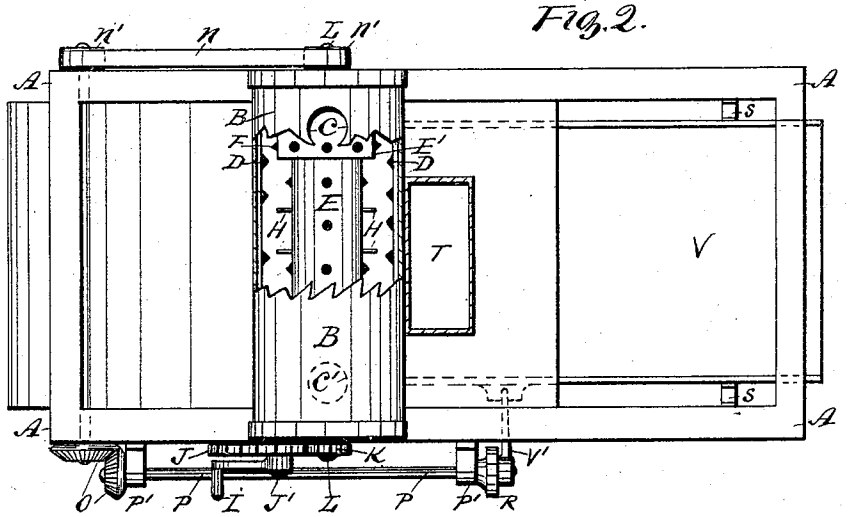

Fig. 2.

Witnesses.
Alfred Young
James Jackson.

Inventor.
Cyrus Russ.
per his Atty John Wendry.

THE NORRIS PETERS CO., PHOTO-LITHO., WASHINGTON, D. C.

UNITED STATES PATENT OFFICE.

CYRUS RUSS, OF BEAMSVILLE, CANADA.

SCOURING AND FANNING MILL FOR CLEANING GRAIN.

SPECIFICATION forming part of Letters Patent No. 456,207, dated July 21, 1891.

Application filed March 12, 1891. Serial No. 384,729. (No model.)

To all whom it may concern:

Be it known that I, CYRUS RUSS, a citizen of Canada, residing at the town of Beamsville, in the county of Lincoln, in the Province of Ontario, Canada, have invented a new and useful Scouring and Fanning Mill for Cleaning Grain, of which the following is a specification.

My invention relates to improvements in a grain-cleaning mill in which grain is introduced into a cylinder which forms the upper part of the mill, said cylinder having an opening adapted as a hopper. This cylinder is provided with an inner revolving cylinder, one end of which is larger in diameter than the other, and the interior of the rigid cylinder and the exterior of the inner cylinder are each lined or covered with sheet metal having projections formed by punching the same from the inner side. The outlet for the grain is at the lower opposite end of the rigid cylinder; and the objects of my improvements are, first, to provide a mill that will disturb and agitate the grain and at the same time detach all white caps, beards, and smut on its passage to the fanning-department, and, second, to afford facilities for the proper adjustment and application of these cleaning and scouring cylinders to mills that have for their object the cleaning of grain. I attain these objects by the mechanism illustrated in the accompanying drawings, in which—

Figure 1 is a sectional side elevation of a mill, and Fig. 2 is a plan of the same with hopper removed and a part of the rigid cylinder broken away to show the interior of same and also the inner revolving cylinder.

Similar letters refer to similar parts throughout the several views.

The frame-work of the mill is indicated by A, and resting on its upper surface is the outer rigid cylinder B, with hopper C near to one end and outlet C′ at the other end. This cylinder is lined with sheet metal punched so as to form a series of projections D. The inner revolving cylinder E has also on its external surface a like covering of sheet metal with a series of projections F. The larger part of the cylinder E (denoted by E′) is at the hopper end, and owing to its closer proximity to the projections of the rigid cylinder has greater scouring capacity, and the smaller part of same, comprising about three-fourths of its entire length, is provided with a series of projecting pins or spikes H, driven into the same. These, in conjunction with said projections, agitate and scour the grain when in operation.

To operate this mill, the crank-handle I in direct connection with the spur-wheel J on their common shaft J′ is turned, thus engaging the pinion-wheel K, which is secured to the shaft L of the said internal cylinder. This operation revolves the cylinder E and also the fan *m*, connected to same by belt *n* on pulley *n′*. This fan-shaft transmits power to the vibrating grain-holder V by means of the two bevel-wheels *o*, secured on said fan-shaft and on the longitudinal shaft P in bearings P′, this latter shaft having at its right-hand end an eccentric R, which connects to the vibrator V by means of the connecting-rod V′, said vibrator being supported by the steel springs S, of which there may be three or four.

The second hopper T on the upper surface of the machine is used chiefly for the reception of refuse grain that may not be required to be put through the cylinders, and also grain may be put into this hopper a second time to produce greater perfection.

This mill, when required to be on a large scale, may be operated by power by simply removing the crank-handle referred to and substituting therefor a pulley.

The revolving cylinder above mentioned will, for economical purposes, act its part if made of wood incased in sheet metal punched from the inner side, as also the outer rigid cylinder.

It will be perceived that the frame-work A, with its grain-vibrator V, its fan *m*, and its inclined grain-receiver U, which facilitates the outward movement of the grain, may not necessarily be new to claim as my invention. Therefore I do not claim such a combination, broadly; but

What I claim as my invention, and desire to secure by Letters Patent, is—

The frame A, provided with the rigid cyl-

inder B, which is lined with thin metal punctured to form the projections D, the feed-inlet C, and the outlet at C′, the revolving cylinder E, provided with pins H and having enlarged end E′ extending past said inlet and which is covered with thin metal punctured to form the projections F, all formed, arranged, and combined substantially as described and set forth.

CYRUS RUSS.

Witnesses:
ALFRED YOUNG,
JAMES JACKSON.