March 8, 1955 S. L. CONNETT 2,703,663

CLOSURE PLATE HOLDING MEANS

Filed Nov. 24, 1950

Fig. 1.

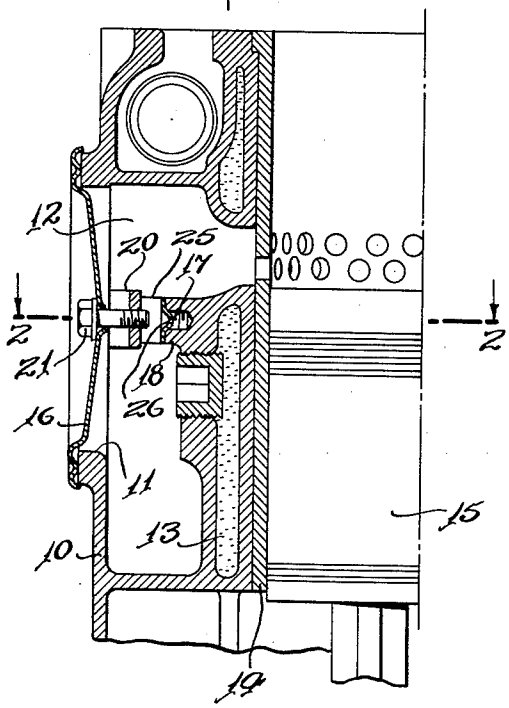

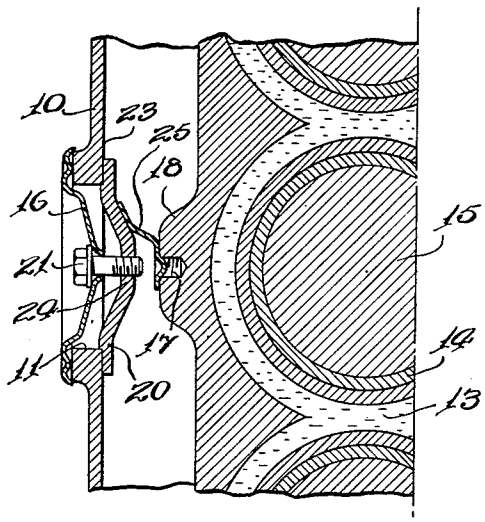

Fig. 2.

Fig. 3.

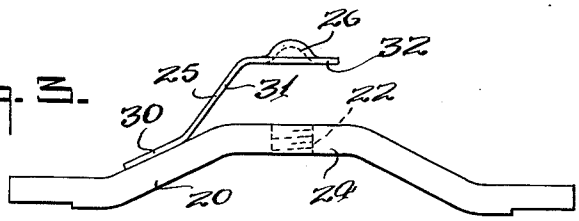

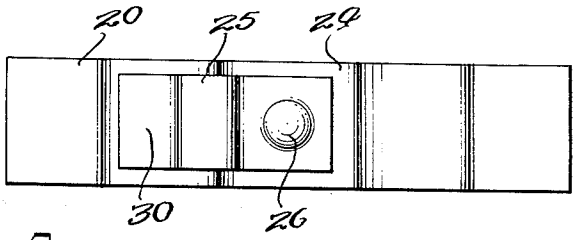

Fig. 4.

INVENTOR
S. LEONARD CONNETT
BY
Davis Hoxie & Faithfull
ATTORNEY

United States Patent Office

2,703,663

Patented Mar. 8, 1955

2,703,663

CLOSURE PLATE HOLDING MEANS

Soloman Leonard Connett, New Orleans, La.

Application November 24, 1950, Serial No. 197,339

2 Claims. (Cl. 220—25)

My invention has to do with the holding of closure plates which cover the hand-holes in the side walls of certain diesel, gasoline or gas engines, and more generally with the holding of closure plates in any comparable situation where it is difficult or undesirable to bolt or otherwise secure the closure to an inner part of the structure in which the opening to be covered is located.

In certain widely used diesel engines, a series of hand-holes is provided in the outer side wall of the engine block to give access to certain operating parts through the interior space between the water jacketed cylinders and the outer casing. The closure plates for these hand-holes are individually held in place by bolts that extend through the plates at their centers and into tapped holes in the outer wall of the water jacket. I have found that when these retaining bolts are drawn up to hold the plates tightly on their seats, a stress is put on the water-jacket that causes a measurable distortion of the cylinders and water jacket and may result in cracking of the water jacket or cylinders, scoring of the cylinders or pistons, sticking of rings, blow-by, oil pumping, breaking of cylinder liners, or hard starting.

An alternative that suggests itself is the use of a so-called "strong-back" bar to span the hand-hole on the inner side and to bear at its ends against the inner wall of the outer casing at opposite sides of the hole, thereby to provide a base to which the closure plate can be bolted. Such bars are commonly used in other situations. But since the casing forms a closed structure there is no way to hold the bar in place until the closure plate is seated and its securing means is applied. To meet that condition, in other situations, special retaining slots have been provided at the inner rim of the hole to receive the ends of the bar. The provision of such retaining means requires special shapes on the inner wall of the casing near the hole. This is often undesirable either as a matter of original construction of the casing, or because these retaining slots are largely hidden from view when the bar is being inserted and it is not always easy to set the bar in place quickly and surely by feel. Further, in the case of structures like the diesel engines referred to, where such retaining means are not provided in the original construction, it is not feasible to add them, and the use of a strong-back bar has not heretofore been possible as a way of avoiding use of the water jacket as the base to which the closure plate is secured.

My primary object is to provide a novel bar which can be used in such engines to hold the closure plate and so eliminate the stress on the water jacket and cylinder walls. It is an object also to provide a simple way of retaining the bar while the closure is being applied, and further to provide for accurate positioning of the bar so that the closure plate securing means connecting with the bar may be easily and surely applied. The invention is useful however in other situations where the bar is an interior part and so can not be held in position by hand during seating of the closure, and where (as in the diesel engine mentioned) there is an inner structure that provides a suitable support adjacent the hole for positioning the bar.

The invention is described here with reference to the attached sheet of drawings showing the use in a diesel engine block of the kind described. In the drawings:

Figure 1 is a partial view in vertical section through one half of a diesel engine block of known construction showing the use therewith of a bar according to my invention.

Figure 2 is a horizontal section on the line 2—2 of Figure 1, showing the same.

Figures 3 and 4 are, respectively, plan and elevation views of the bar itself, showing a preferred shape and preferred form of spring positioner. These are enlarged in relation to Figures 1 and 2.

The pertinent parts of the engine block are the outer casing **10**, the hand-hole **11** therein, giving access to the annular air passage **12** surrounding the water-jacket **13**; the cylinder **14** and the piston **15**. In present practice, the closure plate **16** is held in place, demountably, by a bolt taking into a tapped hole **17** in a boss **18** on the water-jacket **13**. In lieu of this, to eliminate the distorting stress on the water-jacket and cylinders, with its consequent hazard of damage to the engine and impairment of its operation, I provide an interior strong-back bar **20** to which the closure plate **16** is connected in any desired way, most simply by a bolt **21** threading into a tapped hole **22** located mid-way between the ends of the bar. The bolt draws the closure plate against its seat on the outer walls of the casing and draws the bar against its seat on the inner wall at opposite sides of the hole.

The bar **20** spans the hand-hole **11** in a horizontal position, and bears at its ends against the inner face **23** of the outer casing **10** at opposite sides of the hole **11** near its rim. The bar is arched at its mid-portion **24** and on the inner side of the arch there is a spring positioner **25** which bears against the boss **18** on the water jacket and may have a detent **26** resting in the hole **17** originally provided to receive a bolt for holding the closure plate. This spring positioner **25** serves to hold the bar in place against the inner face **23** of the outer casing **10** before the closure plate **16** is seated.

The spring positioner may take various forms, using either a flat or a coil spring element. The one shown consists of a flat strip of spring steel of the shape shown. At one end **30** it is spot-welded to the bar **20** at a point at one side of the center of the bar, so that the diagonal and inwardly extending part **31** reaches to a point in line with the center, where it is bent into parallelism (as at **32**) with the bar, and may carry the detent button **26**. This detent, if used, fits into the hole **17** which is directly in line with the center of the hand-hole **11**. Thus, the bar **20** may be inserted endwise through the hole **11** and then turned until its ends bear on the inner face **23** of the outer casing **10**, bringing it into approximately correct position. It can then be adjusted until the detent seats in the hole **17**, and that accurately positions the bar with its center hole **22** in line with the center of the hand-hole **11** and therefore in line with the bolt **21** extending through the center of the closure plate **16**. The spacing of the detent from the bar is slightly greater than the spacing of the arched mid-point of the bar from the boss on the water-jacket, so that when put in place as just described the spring strap **25** is forced toward the bar and so exerts a force pressing the bar against the outer casing **10**. This is enough to hold the bar from dropping down or from dislodgement in the course of inserting the bolt **21** to hold the closure plate.

Thus, without any re-shaping of any parts of the engine, and without other change, the strong-back bar may be used as the base to which the closure plate is secured. The only forces exerted upon tightening the bolt to hold the closure plate on its seat are forces applied oppositely to the outer casing **10**, that is to say, around the rim of the hand-hole by the closure on the outside, and at two points on the rim at the inside where the bar bears on the casing. These opposite forces are balanced and, while not equally distributed (in the case of the bar), cause no distortion of any consequence. There is no stress on the water jacket to cause distortion of it, and the cracking is eliminated.

This same idea of a strong-back bar providing a base for the closure-plate securing means, and having a spring means to bear on a fixed inner part of the structure inboard from the hole, may be used in other structures having hand-holes, inspection plates, valve covers, or other openings in an outer casing. The same advantage may be realized of convenient placement, accurate positioning and freedom from distortion of the inner structure that

otherwise would be used as the base for the securing means.

In describing the relative location of the parts of the novel bar, words are used with reference to the relations existing when the bar is in use. For example, the spring strap is described as extending inward, taking the casing **10** to be an outer part and the water-jacket (or the corresponding part of any other structure) as an inner part.

I claim:

1. A strong-back bar to serve as the base for securing an outer closure plate covering an opening in the outer casing of a structure, comprising an elongated bar member adapted to span the opening and to bear at its ends against the inner wall of the casing at opposite sides of the opening, means on said bar to provide for connecting it to the closure plate to hold the plate against the outside of the casing and over the opening, and positioning means including a strip of spring steel affixed to the bar at one side and extending inwardly therefrom to a point spaced from but in line with the center of the bar, and a detent part on the outer end of said spring strip for accurate positioning of the bar.

2. A strong-back bar to serve as the base for securing the outer hand-hole closure plate of a diesel engine cylinder block casing, comprising an elongated bar member of length to span the hand-hole and to bear at its ends against the inner wall of the casing surrounding the hand-hole, means on said bar to provide for connecting it to the closure plate to hold the plate against the outside of the casing and over the hand-hole, and positioning means including a strip of spring metal having one of its ends affixed to the inner side of said bar and having a free portion extending in the direction of the length of the bar and overlying the center of the bar, said free portion being spaced inwardly from the center of the bar by an amount greater than the spacing between the inner side of the bar and the opposite wall of the engine cylinder.

References Cited in the file of this patent

UNITED STATES PATENTS

2,258,342	Tinnerman	Oct. 7, 1941
2,380,379	Attwood	July 31, 1945
2,402,556	Judd	June 25, 1946