United States Patent [19]

Small

[11] **3,895,444**

[45] **July 22, 1975**

[54] **MANDIBULAR STAPLE AND DRILL GUIDE**

[76] Inventor: **Irwin A. Small,** 751 Chestnut, Birmingham, Mich. 48088

[22] Filed: **Aug. 28, 1974**

[21] Appl. No.: **501,318**

[52] **U.S. Cl.** ..... **32/10 A**

[51] **Int. Cl.** **A61c 13/00**

[58] **Field of Search** ..... 32/40, 10 A, 2

[56] **References Cited**

UNITED STATES PATENTS

3,436,824	4/1969	Ebelman	32/10 A
3,474,537	10/1969	Christensen	32/10 A

Primary Examiner—Robert Peshock

Attorney, Agent, or Firm—Cullen, Settle, Sloman & Cantor

[57] **ABSTRACT**

A drill guide for mandibular staples is adapted to accurately align a drill for drilling fastener holes in the mandibular lower jaw portion at precisely located positions for the attachment of fasteners therethrough by means of a staple to retain a dental appliance in secure position on the mandibular jaw portion. A V-shaped arcuate groove in the top of the drill guide registers with the center line of the drill guide holes for cooperative registry and alignment with the undersurface of the mandible. A staple has a lower cross plate which is arcuate to conform to the curvilinear shape of the front section of the jaw bone. Attached to said plate are a plurality of fasteners adapted to protrude into and selectively through the jaw bone in accordance with the holes previously drilled. The fasteners are electron-beam-welded to the lower cross plate for a metal-to-metal relation preventing corrosion between the parts and to provide increased strength. The staple is made of a titanium alloy with about 6 percent aluminum and about 4 percent vanadium, to be corrosion-resistant.

5 Claims, 8 Drawing Figures

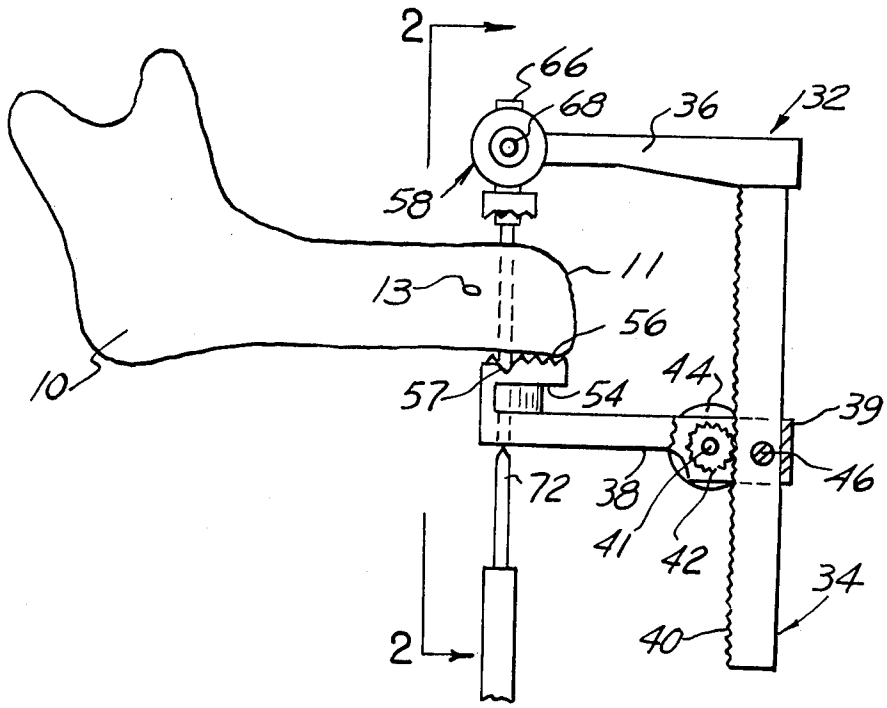

FIG. 1

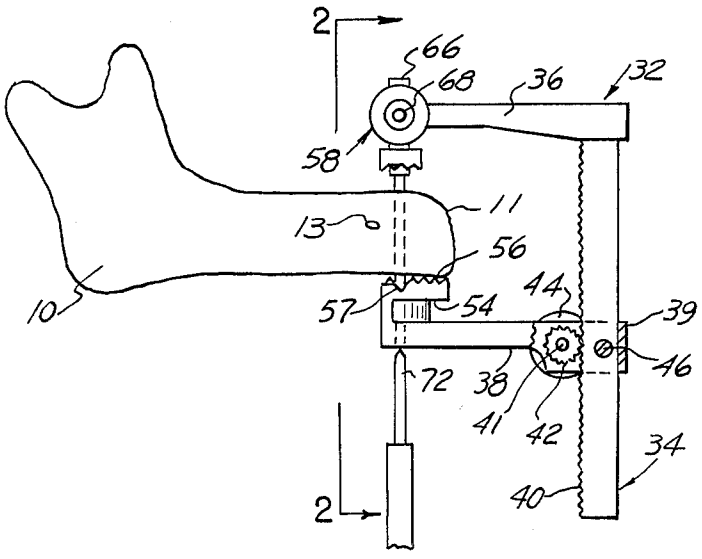

FIG. 8

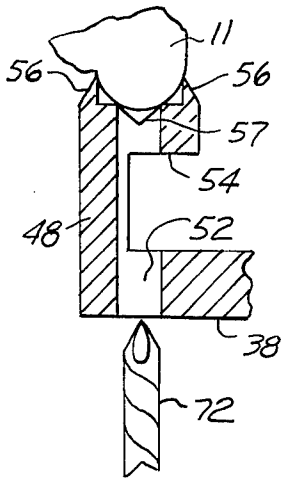

FIG. 3

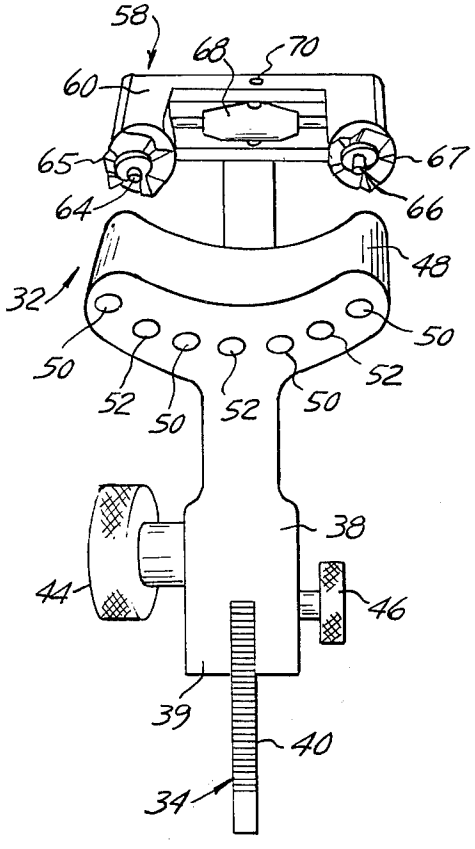

FIG. 2

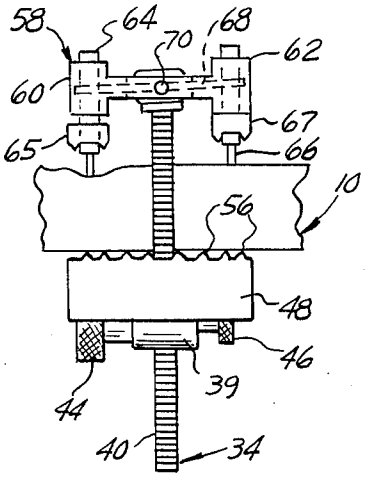

FIG.4

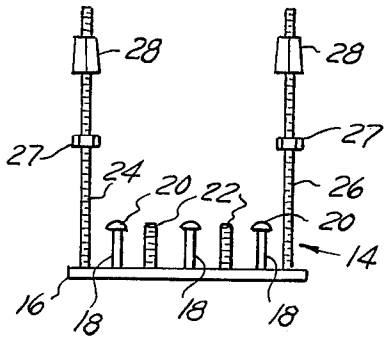

FIG.7

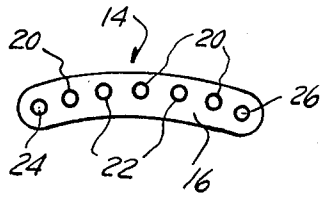

FIG.5

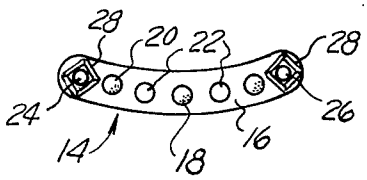

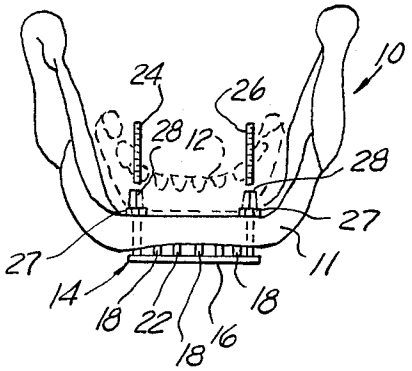

FIG.6

MANDIBULAR STAPLE AND DRILL GUIDE

REFERENCE TO RELATED PATENTS

The present invention is an improvement over applicant's prior U.S. Pat. No. **3,414,975** and U.S. Pat. No. **3,664,022.**

BACKGROUND OF THE INVENTION

The present invention relates to drill guide for mandibular staples and to the construction of the mandibular staple.

Heretofore, in the use of dental appliances of removable nature, particularly with reference to the lower mandibular jaw, natural suction of the dental appliance or cohesion is often reduced due to the aging and wasting away of jaw bone tissue. Various means are known to be employed in an effort to retain and anchor the lower removable dental appliance against accidental dislodgement from the jaw bone. However, the use of adhesives or known mechanical devices heretofore have been ineffective and inefficient for the intended purpose.

BRIEF DESCRIPTION OF THE INVENTION

It is the object of the present invention to provide a mandibular staple which is accurately secured to the mandibular jaw bone beneath the subcutaneous tissue and which, once secured in place by a pair of threaded fasteners, is so arranged that the threaded fasteners themselves are adapted to be interlockingly nested within undercut apertures provided in the dental appliance to anchor the dental appliance against accidental displacement with respect to the jaw bone.

It is another object to provide an improved drill guide in the form of a jig bore for mandibular staples used in the mechanical attachment of dental appliances to the jaw bone of a patient. The present improved drill guide provides an accurate means for guiding the drilling of apertures through a mandibular jaw bone, be it human or animal, and which apertures at accurately spaced points are adapted to receive a mandibular staple made of metal provided with fastening means thereon to securely engage the jaw bone and to provide an interlock with the dental appliance normally removably mounted on the jaw bone.

The accompanying drawings illustrate a preferred embodiment of the invention in which:

FIG. **1** is a side elevational view of the present improved mandibular drill guide shown in attached drilling position on the curvilinear front end of the mandibular jaw bone;

FIG. **2** is an elevational view taken in the direction of arrows **2—2** of FIG. **1**;

FIG. **3** is an enlarged perspective rear view thereof;

FIG. **4** is a side view of the mandibular staple;

FIG. **5** is a plan view thereof;

FIG. **6** is a composite illustration showing the present improved staple in attached position with the dental appliance indicated on the jaw bone in dash lines;

FIG. **7** is a bottom plan view of the staple;

FIG. **8** is a fragmentary vertical section of the drill guide of FIG. **1**, on an increased scale.

DETAILED DESCRIPTION OF THE INVENTION

FIGS. **1** and **6** illustrate a mandibular jaw bone **10**, which could be either human or animal, and which is adapted to receive a removable lower dental appliance

12, FIG. **6.** Mounted upon jaw bone **10** is the present improved mandibular staple, shown in detail in FIGS. **4, 5** and **7.**

In FIGS. **4** and **5** the improved mandibular staple **14** includes a lower flat support plate **16.** In the attachment of the improved mandibular staple to the jaw bone, support plate **16** is adapted to abut against the underside of the jaw bone, FIG. **6.** The support plate **16** is arcuate in plan so as to correspond to the curvilinear shape of the front end **11** of the jaw bone.

From the upper surface of the support plate **16** extend a first set of staple securing pins **18** which are welded to the support plate. The first set pins are slightly upwardly tapered and provided at the upper end with a mushroom head **20.** These pins **18** are equally spaced along the surface of plate **16.** Extending from the support plate is another set of threaded locator pins **22** likewise secured to plate **16.** Each of the locator pins are disposed intermediate a pair of adjoining securing pins.

A pair of outer rods **24** and **26** are likewise secured to plate **16.** These are for full extension through jaw bone **10.** The outer rods are adapted to extend through predrilled holes provided in the front end portion **11** of the jaw bone. The pins **18, 22, 24** and **26** are electron-beam-welded to support plate **16** as shown in FIG. **7.** There is, thus, a metal-to-metal relationship between said pins and plate, as in a unit cast device. There is no interface between the metal parts and, thus, no chance for later corrosion. Such welding gives great strength of the pin attachment to the curved plate. There is no physical space between pins and plate. The electron beam welding prevents any variation in oxygen concentration. If oxygen was allowed to change its concentration when buried in the body, it would cause corrosion.

The mandibular staple and nuts **27, 28** are made of a titanium alloy containing about **4%** vanadium and about **6%** aluminum. The staple is, thus, corrosion-resistant.

Lock nuts **27** are threaded over rods **24, 26** into abutment with the jaw bone **10.** Nuts **28** are then threaded over said rods down to the desired elevation. The lock nuts are then adjusted to apply locking pressure to the nuts **28.** The lock nuts take the place of acrylic glue used heretofore for anchoring nuts **28.** Nuts **28** may be raised and lowered by releasing the pressure of the lock nut, to accomodate variations in jaw size.

In assembly, FIG. **6,** after the nuts **28** have been threaded over the outer rods, the free ends of the rods extending above the nuts are cut off. The dental appliance, indicated in broken lines at **12** in FIG. **6** is provided with spaced apertures which, interlockingly engage nuts **28.**

In the application of the mandibular staple **14** to the jaw bone **10** by a dental surgeon, the tissue of the jaw bone is carefully loosened and moved away from the mandibular bone and the plurality of holes and blind apertures provided in the jaw bone **10** by means of the present improved drill guide. Thereafter the staple **14** with locator pins **18–22** and long securing rods **24–26** are aligned with the apertures provided in the jaw bone for attachment to the jaw bone. The tissue of the jaw bone eventually grows together again around the apertures.

With reference to FIGS. **1** through **3,** the drilling of the respective apertures through the curvilinear front section of the jaw bone **10,** presents the most signifi-

cant problem in the accurate application of the improved mandibular staple **14** so as not to have the staple bind or otherwise damage the jaw bone or to cause subsequent later problems and injury. Thus, the respective apertures must be drilled such as to be in perfect alignment with and corresponding to the spacing of locking pins **18**, locator pins **22** and outer fastening rods **24–26** of the staple. It is essential that the drilled apertures through the jaw bone be accurately located with respect to the jaw bone centerline and inwardly of the open nerve centers **13** of the jaw bone.

The present improved drill guide **32** consists of an elongated post **34** which at the upper end supports an upper arm **36** and also supports a lower arm **38** which is slidable along the post towards or away from the upper arm. The inner surface of post **34** has rack teeth **40** engaged by a gear **42** journaled within an enlarged rear portion **39** of lower arm **38.**

The gear is rotatable on a shaft **41** which carries a handwheel **44** at its outer end for rotation of the gear **42.** Thus, the lower arm can be moved longitudinally along the post **34.** The enlarged portion **39** of the lower arm carries a lock screw **46** to lock the lower arm in the desired adjusted position relative to the upper arm.

The front end of the lower arm **38** expands into a transverse curvilinear shaped drill guide portion **48** which, as shown in FIG. **3,** is provided with a first set of apertures **50** and a second set of apertures **52.** the apertures **50** and **52** in the drill guide portion **48** are adapted to guidingly receive drill **72** for drilling holes in the jaw bone **10** for attachment of the staple **14,** and thus correspond in spacing and number to the spacing and number of locking pins **18–22** and fastener rods **24–26** of the staple **14.** Thus, the apertures **50** are adapted for drilling apertures for the threaded locator pins **22** and fastener rods **24–26** whereas the apertures **52** are adapted for drilling apertures for the locking pins **18.**

The arcuate shape of the drill guide corresponds to the curvilinear shape of the support plate **16** of the staple **14.** As seen in FIG. **1,** the rear of the drill guide portion **48** is slotted from end to end as at **54,** intersecting the apertures **50** and **52** to provide a lateral opening for each of the apertures which permits powdered bone material and bone chips to be expelled during the drilling operation so as not to accumulate and clog the apertures.

The upper surface of the drill guide portion **48** is provided with a double row of upwardly protruding teeth **56** extending along the opposed outer edges of the drill guide portion. On assembly of the drill guide **32** to the jaw bone **10,** these teeth are adapted to bite into the lower surface of the jaw bone upon adjustment of the lower arm **38** to lock the drill guide portion **48** in place, in order to prevent slipping during the drilling operation.

A curved groove **57** of V shape, FIG. **8,** is formed in the upper surface of the drill guide portion **48** between and below teeth **56** corresponding to the center of the drill holes **50, 52** of the drill guide. The groove helps to center and locate the exact center of the curved inferior border of the mandible. This is important for improved locking ability when the drill guide and director rod are tightened together for drilling, FIG. **1.** It is important to locate the exact center of the inferior border so that the drilled holes can be placed very accurately.

As described in my U.S. Pat. No. **3,664,022,** the front end of the upper arm **36** supports a yoke member **58** which extends transversely of the arm to both sides thereof. Both outer ends of the yoke member are formed cylindrically as at **60** and **62,** and each supports a locator pin **64, 66** for extension downwardly towards the drill guide portion **48.** The locator pins **64–66** are yieldably supported for relative up or down movement at opposite ends of a centrally pivoted see-saw lever **68** which extends longitudinally through the yoke member **58** and is pivotally secured therein at **70.** When one locator pin is moved upwardly, the other opposite locator pin is moved downwardly. This pivotal reciprocating arrangement of the locator pins **64–66** accomodates uneveness in the jaw bone. The lower ends of each of the locator pins **64–66** carry a toothed abutment **65** and **67.**

The pivotal locator pins **64–66** are positioned in vertical alignment with a respective outer end aperture **50** of the drill guide portion **48** on the lower arm **38.**

Referring to FIGS. **1** and **6,** the drill guide is attached to the curved front end **11** of the lower jaw bone **10** of the patient after first pulling back the tissue around the portions of the jaw bone which are to be drilled. The lower arm **38** of the drill guide assembly **32** is adjusted such as to abut against the underside of the curved front portion **11** of the jaw bone to clamp the jaw bone between the drill guide member **48** and the upper locator pins **64–66** which accurately mark the position for the extension of the securing rods **24–26** of the staple through the jaw bone.

The V groove **57** in the upper surface of the drill guide portion guides the lower jaw bone into accurate registry. The surface teeth **56** of the drill guide portions bite into the jaw bone to prevent lateral or rotational displacement of the drill guide during drilling. The curvature of the drill guide member corresponds substantially with the curvature of the front end **11** of the mandibular jaw bone **10** to properly drill the apertures for the staple **14** along an arcuate path.

CONVENTIONAL OPERATION

After the drill guide has been attached to the lower mandibular jaw bone of the patient, a drill **72,** FIG. **1,** of the proper size is selected to first drill the two outer apertures in the jaw bone which are adapted to receive the securing rods **24–26** of the staple. After the first through aperture is drilled through the mandibular jaw bone by guidance of the drill through an outer end aperture **50** in the drill guide member, a Kirschner wire of proper diameter is inserted through the drill guide aperture **50** and through the aperture which has been drilled through the jaw bone for further anchoring the drill guide assembly **32** in its previously located positon on the jaw bone to avoid accidental displacement during drilling of the remainder of the apertures.

The second, opposite outer end aperture is then similarly drilled through the jaw bone by utilization of the opposite outer end aperture **50** in the drill guide and a second Kirschner wire of proper diameter is inserted through the drill guide aperture and the drilled aperture in the jaw bone whereby the drill guide assembly is now anchored at two spaced points to positively prevent any displacement.

Thereafter, the remainder of the intermediate blind apertures are drilled on the jaw bone for insertion of the locator pins **22** of the staple, utilizing a drill of the

same size as previously employed for the outer end apertures. This drill, however, will be provided with an adjustable stop at a proper distance from its tip, for drilling blind apertures. The apertures for the locator pins **22** do not extend all the way through the mandibular jaw bone. Similarly, another set of blind apertures is drilled into the jaw bone in properly located positions to receive the locking pins **18** of the staple.

Once all the apertures have been drilled through the jaw bone at their preselected accurate locations, the drill guide assembly is removed from the jaw bone and the staple is properly attached by means of the drilled apertures in the jaw bone. The staple **14** is assembled to the jaw bone from underneath, such that the opposed outer end securing rods **24–26** extend through the outer-most drilled bores in the jaw bone and the intermediate locator and locking pins **18–22** extend into their respective blind apertures. The staple **14** is hammered in place.

After the staple **14** has been properly attached to the jaw bone, the lock nuts **27** are threaded over rods **24, 26** to the jaw bone. The securing nuts **28** are threaded down onto said rods to the desired location adjacent the jaw bone. The lock nuts are then adjusted into pressure engagement with nuts **28.** Thereafter, the free ends of the securing rods **24–26** immediately above the nuts **28** are cut away. The dental appliance **12,** FIG. **6,** is then placed on the jaw bone in such fashion that the nuts **28** and the lock nuts **27** are in alignment with undercut apertures previously provided in the dental appliance to anchor the dental appliance against accidental displacement with respect to the jaw bone **10.**

After the staple **14** has been in place for a certain time within the jaw bone, the previously penetrated subcutaneous and bone tissue around the locations of the apertures in the jaw bone will grow back into place and around the mutiple locking and securing pins of the staple.

I claim:

1. In a drill guide assembly for mandibular staples adapted for drilling a plurality of apertures in accurately located positions through a jaw bone; said drill guide assembly having an elongated post having a first arm member extending therefrom, a second arm member longitudinally movable along said post towards and away from said first arm member, means to lock said second arm member in adjusted position relative to said first arm member, said first arm member carrying a pair of spaced locator pins, said second arm member carrying a jig fixture at its outer end, said jig fixture being arcuate in a horizontal plane and having a plurality of spaced apertures extending therethrough, said apertures being located along an arcuate line, the outermost of said apertures being in vertical alignment with said pair of spaced locator pins of said first arm;

the improvement comprising spaced arcuate rows of teeth protecting outwardly from the top surface of the jig fixture in respective alignment with the arcuate inner and outer surfaces thereof;

and an arcuate grooved portion of V shape in the top surface of said jig fixture below and between said teeth;

said locator pins of said first arm member being adapted to be placed in position on the upper surface of said jaw bone at a pair of prelocated points;

said jig fixture of saidsecond arm member being adapted to cooperatively receive and center along its V groove the depending undersurface of the jaw bone and to clampingly engage the lower surface of said jaw bone upon relative adjusting movement of said second arm member towards said first arm member along said post to cause said teeth on the upper surface of said jig fixture to bitingly engage said jaw bone to prevent displacement of said drill guide when said second arm member is locked in position;

the arcuate arrangement of said plurality of apertures corresponding substantially to the curvilinear shape of said jaw bone;

and each of said apertures being adapted to guidingly receive a drill for drilling a plurality of apertures in said jaw bone at accurate predetermined locations.

2. In a mandibular staple adapted for attachment to a jaw bone to locate and retain a dental appliance on said jaw bone, said mandibular staple having an elongated support plate; a pair of threaded securing rods extending upwardly from said support plate in parallel direction from both ends thereof; a plurality of locking pins disposed between said pair of securing rods extending upwardly from said support plate in parallel direction with said securing rods, and a plurality of locating pins extending from said support plate located between said locking pins and in parallel alignment therewith; said locking pins and said locating pins being of substantially shorter length than said pair of outer end securing rods;

the improvement comprising a lock nut threaded over each securing rod adapted for positioning adjacent the jaw bone;

and a nut threaded over each securing rod adapted for positioning adjacent said jaw bone;

said lock nuts adapted for applying securing retaining pressure on said nuts respectively, said latter nuts adapted for retaining engagement within mating apertures prelocated in said dental appliance.

3. In the mandibular staple of claim **2,** said securing rods, locking pins and locating pins being electron-beam-welded to said support plate in metal-to-metal relation without interface.

4. In the mandibular staple of claim **2,** said plate, rods, pins, fastener nuts and lock nuts being of titanium alloy of about **6%** aluminum and about **4%** vanadium, approximately.

5. In the mandibular staple of claim **3,** said plate, rods, pins, fastener nuts and lock nuts being of a titanium alloy of about **6%** aluminum and about **4%** vanadium, approximately.

* * * * *