May 30, 1933. R. A. COLE ET AL 1,911,553

MACHINE FOR PRECISION GRINDING

Filed Nov. 26, 1928 2 Sheets-Sheet 1

Fig. 1

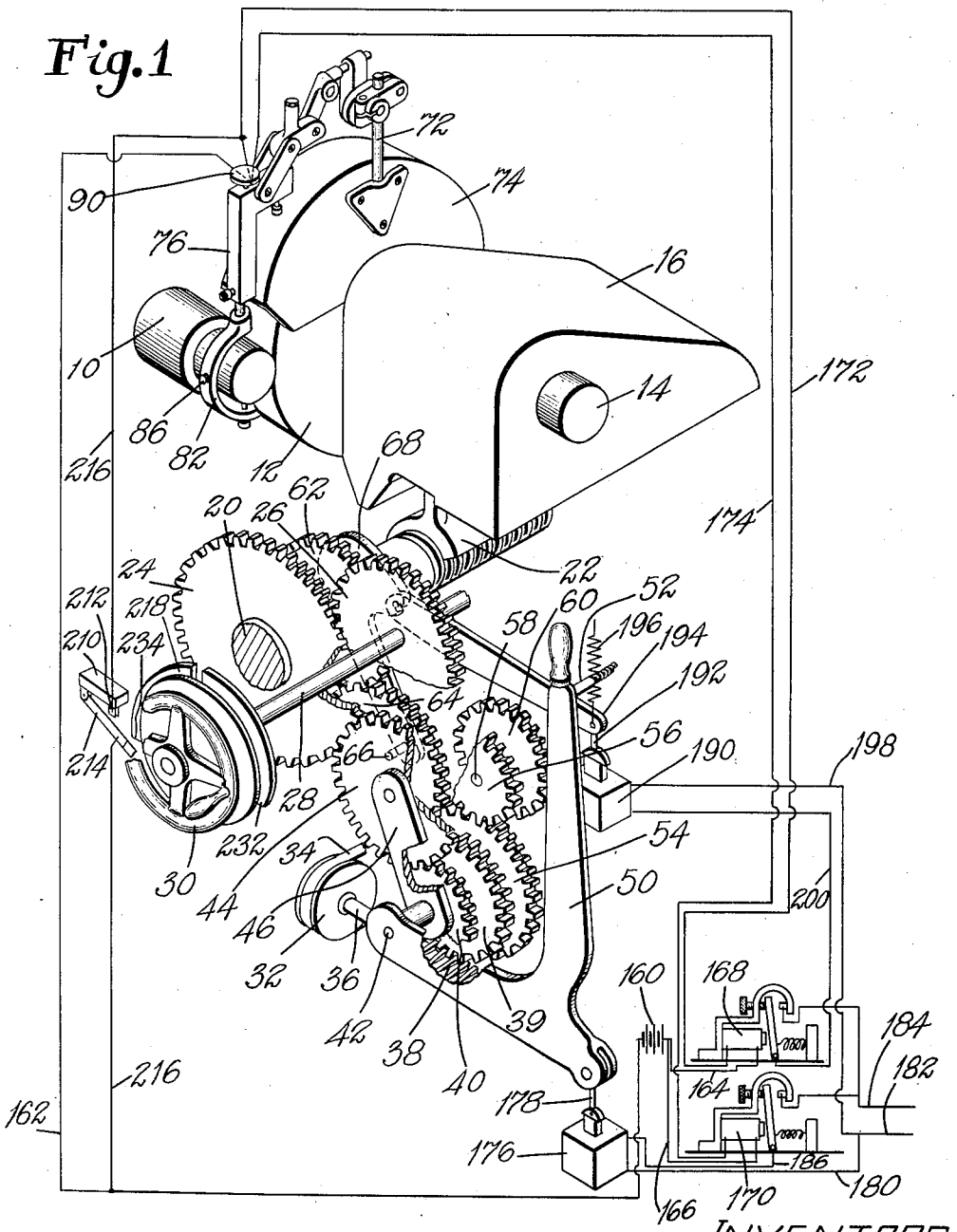

INVENTORS.

RAYMOND A. COLE

ALBERT G. BELDEN

WITNESS

H. W. Kenway.

BY Clayton R. Jenkes

ATT'Y

May 30, 1933. R. A. COLE ET AL 1,911,553

MACHINE FOR PRECISION GRINDING

Filed Nov. 26, 1928 2 Sheets-Sheet 2

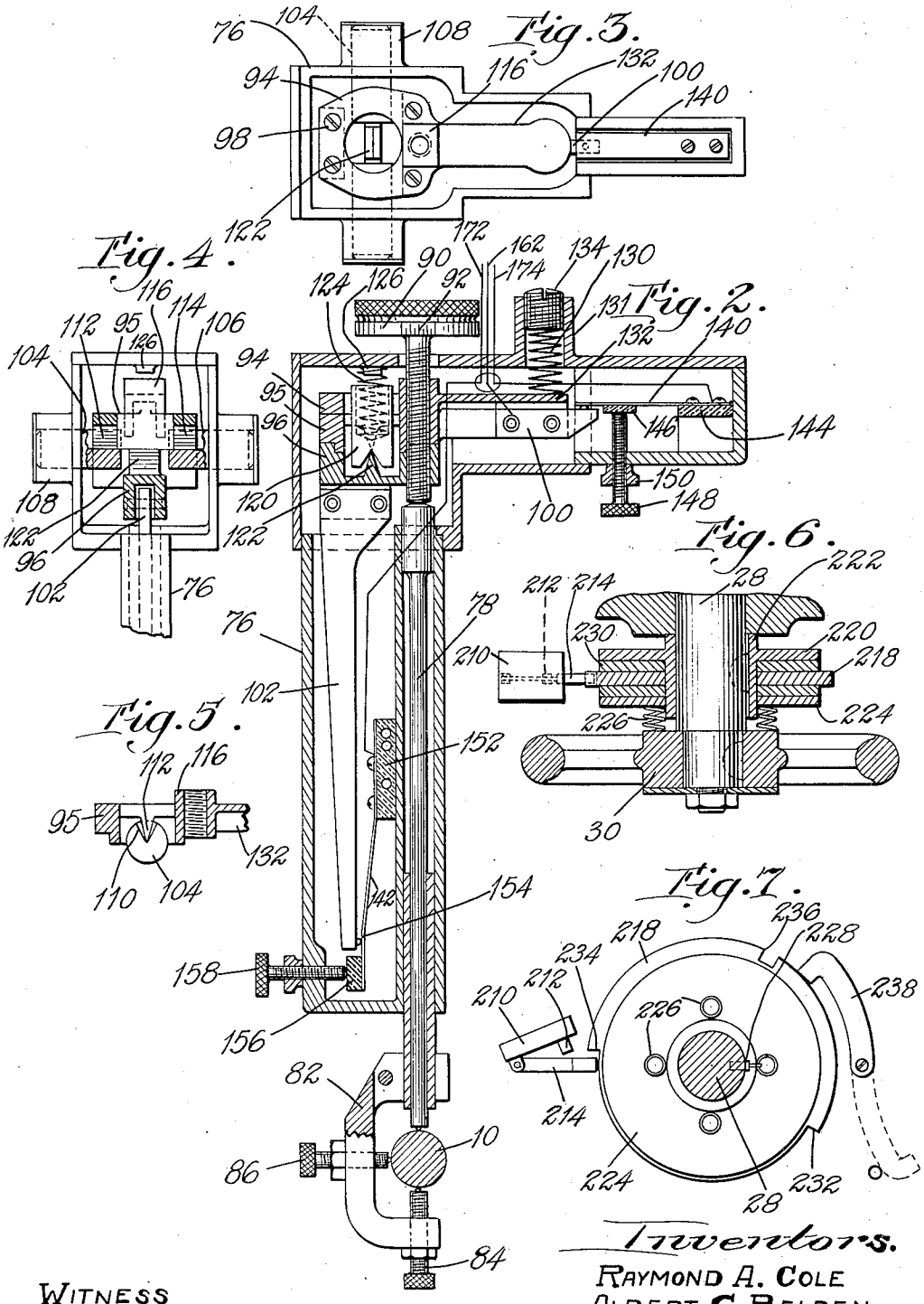

WITNESS

Inventors.
RAYMOND A. COLE
ALBERT G. BELDEN
by Clayton R. Jenks
Atty.

Patented May 30, 1933

1,911,553

UNITED STATES PATENT OFFICE

RAYMOND A. COLE AND ALBERT G. BELDEN, OF WORCESTER, MASSACHUSETTS, ASSIGNORS TO NORTON COMPANY, OF WORCESTER, MASSACHUSETTS, A CORPORATION OF MASSACHUSETTS

MACHINE FOR PRECISION GRINDING

Application filed November 26, 1928. Serial No. 321,950.

This invention relates to machines for precision grinding. In one aspect it consists in improvements of application to such machines in general. In another aspect it consists in the development or carrying forward of the principles disclosed in the prior application of Raymond A. Cole and Albert G. Belden, Serial No. 307,729, filed September 22, 1928.

Machines for precision grinding, of a type well known in the art, are organized to effect a relative movement of a driven grinding element and a support for a work piece, thereby producing a grinding feed and reducing the diameter of the work. Such machines may be arranged for automatic control through the medium of calipering devices and the character of work for which they are commonly utilized requires extreme precision in the action of the calipering mechanism, so that an accurate measurement of the work as to its dimensions will be indicated as the grinding operation progresses. Their construction must also be such that the grinding feed may be controlled within variations in order of magnitude of two tenths of a thousandth of an inch (0.0002″). Usually such machines are arranged to rotate the work as the grinding progresses so as thereby to reproduce articles having cylindrical cross sections with great accuracy. Regardless of the exact type of work, however, the extreme precision required renders it necessary to consider various control factors which are of no moment when coarser operations are undertaken. For example, the film of oil in the bearings of the centers upon which the work is supported may be compressed and allow a slight displacement of the work under the side pressure produced by the feed of the grinding apparatus. Then, too, the play or spring in the various machine parts introduces a source of error, and even slight distortion of the work itself may be of consequence unless the grinding operation is completed under conditions of extremely light pressure between the work and the grinding element.

It has been found that the difficulties encountered in precision grinding may be overcome to a large extent by utilizing the construction illustrated in the earlier application, to which reference has been made above. This discloses an automatic grinding machine of which the calipering device is arranged, upon the attainment of a predetermined size in the continued reduction of the work, automatically to interrupt the feed and allow the grinding operation to continue without continuing the pressure between the work and the grinding element so as to produce a finishing cut which will bring the work exactly to the dimension which it is desired to reproduce. The arrangement is such also that when the finishing cut has reduced the work exactly to this final dimension, then the feeding mechanism is set in operation to reverse the feed of the grinding device so as to carry it away from the work preparatory to the removal of the work and its replacement by another piece.

An object of the present invention is to provide an improved machine of this character in which still greater accuracy and uniformity may be secured and the reproduction of successive pieces of work subject only to the most minute variation may be made possible.

As will be clear to those skilled in the art, the successful operation of such a machine depends to a considerable extent upon the correct and accurate construction and sensitive action of the calipering mechanism. The present invention aims to provide a calipering device of improved mechanical construction and precision of operation. To this end an important feature consists in suspending the tripping member upon knife-edge bearings, in providing a micrometer adjustment between the tripping member and the feeler, and arranging the tripping member successively to break electric circuits controlling the feed of the machine.

These and other features of the invention will be best understood and appreciated from the following description of a preferred embodiment thereof, selected for purposes of illustration and shown in the accompanying drawings, in which

Fig. 1 is a view in perspective of the operative parts of the machine including the calipering device and the feeding mechanism;

Fig. 2 is a view in longitudinal vertical section through the calipering device and its casing;

Fig. 3 is a plan view of parts of the calipering device with the top of the casing removed;

Fig. 4 is an end view, taken from the left in Fig. 2, of the upper portion of the calipering device with the end of the casing removed;

Fig. 5 is a fragmentary sectional view of a portion of the tripping lever;

Fig. 6 is a horizontal section through the hand-wheel of the feeding mechanism; and

Fig. 7 is a view in elevation of the switch mechanism operated by the hand-wheel.

The illustrated machine is designed particularly for grinding cylindrical work pieces, such as the shaft 10 shown in Figs. 1 and 2. It includes a grinding wheel 12 which is mounted on a shaft 14 in a carriage 16 mounted on the frame of the machine for sliding feeding movement toward and away from the work. Although it is not shown herein, it will be understood that the work is carried in a work table which is mounted to slide longitudinally of the base and is provided with a head-stock and a tail-stock to support the work piece 10 for rotation in contact with the grinding wheel. The feeding movement of the carriage 16, and hence of the grinding wheel 12, is effected by means of a screw-threaded feed shaft 20, the threaded portion of which engages a half nut 22 secured to the lower side of the carriage 16. Rotation of the shaft 20 in one direction is effective to feed the grinding wheel toward the work to cause a reduction in the same, while rotation of the shaft 20 in the other direction effects a reverse feed to withdraw the grinding wheel, terminating the grinding operation and facilitating the introduction of another piece of work.

In order to rotate the feed shaft 20 to effect a feeding movement, there is provided a gear 24 which is secured to said shaft and which meshes with a smaller gear 26 mounted on a shaft 28 which is journaled in the frame and is provided with a hand wheel 30 at its forward end so that the operator will be able to adjust the position of the grinding wheel or otherwise manually to control the feeding movement by rotation of the hand wheel 30.

A power-driven mechanism is also provided by means of which the feeding movement of the grinding wheel may be carried out automatically, and to this end a pulley 32, driven by a belt 34 from any suitable source of power (not shown) is arranged to rotate a shaft 36 having a worm 38 thereon. This worm 38 meshes with a gear 39 upon a transverse shaft 42 which also carries a smaller gear 40 keyed to the shaft, and the gear 40 in turn may be connected to the gear 24 by means of a tumbler gear 44. The tumbler gear 44 is carried upon a swinging arm 46, the lower end of which is pivoted upon the shaft 42 so that the gear 44 may roll around the gear 40 and be swung away from or into mesh with the gear 24, thereby to transmit power from the driven shaft 36 to the feed shaft 20. The position of this tumbler gear 44 may be controlled manually by means of a bell crank lever 50 pivotally mounted on end of the shaft 42 and connected through a sleeve or hub to the arm 46 so that, when turned to the left, as viewed in Fig. 1, it throws the tumbler gear 44 into operative position so that power is transmitted to the feed shaft 20 to move the grinding wheel continually toward the work. In order that the lever 50 may be held in operative position with the tumbler gear 44 in mesh with its adjacent gear 24, a spring-pressed plunger latch 52 is slidably mounted in the frame of the machine for engagement with the upper end of said lever.

When it is desired to feed the grinding wheel in the opposite direction so as to withdraw it from the work, a reverse feed of the carriage 16 may be obtained by another chain of mechanism also arranged to interconnect the power-driven shaft 36 with the feed shaft 20, this mechanism being arranged, however, to move the grinding wheel away from the work at a higher rate of speed than that at which it is fed toward the work. The mechanical connection between the driven shaft 42 and the feed shaft 20 for this reverse feed includes a large gear 54 secured to the shaft 42 for rotation therewith and meshing in turn with a smaller gear 56 carried on a stub shaft 58 which also carries a somewhat larger gear 60. The connection between this gear 60 and a gear 62 on the feed shaft 20 includes a second tumbler gear 64 freely rotatable upon a stud 66 carried at the lower end of a bell crank lever 68 which is pivoted to swing upon a portion of the feed shaft 20. By reason of this mounting, the tumbler gear 64 may be rolled about gear 62 and brought into mesh with the gear 60 so as to effect a reverse feed, turning the shaft 20 in the opposite direction, it being noted that this reversal of the feed results from the interposition of the gears 56 and 60 in the train of the reverse feed mechanism. Thus, the feed shaft is rotated in one direction or the other according as the connection from the power driven shaft 36 includes the tumbler gear 44 or the tumbler gear 64, only one of these being allowed to be in mesh at one time.

The machine may be arranged for automatic operation so as to reproduce work

pieces of predetermined size with a very high degree of precision and at the same time at such a speed that maximum production is assured. This involves the use of the calipering device which will now be described. The calipering device may be mounted in any desired fashion upon the machine but is here shown as supported by means of a bracket 72 secured to a wheel guard 74. This calipering device includes an L-shaped casing 76 (Fig. 2) carrying a feeler rod 78 and a tripping lever. A caliper frame 82 is also mounted upon the casing and is provided with an adjustable contact screw 84 diametrically opposite to the end of the feeler rod 78 and with another adjustable contact screw 86 designed to bear laterally upon the work to hold the screw 84 and the end of the feeler rod at the maximum diameter of the work 10 when the grinding operation is begun. In order to reduce the wear of these parts contacting with the work to a minimum, they are provided with contact points of very hard material such as diamonds set in the ends thereof. The tripping member is designed to magnify the movement of the feeler rod 78 during the progressive reduction of the work and itself constitutes part of a plurality of electric circuits which are successively broken as the diameter of the work approaches the ultimate measurement required.

To the end that the calipering device may be adjusted so that the machine will produce work pieces of different sizes, the connection between the tripping lever and the feeler rod 78 is effected by means of a micrometer screw 90. This screw may be provided with indicating marks 92 for reference with a fixed index point (not shown) so that its setting may be reproduced if desired. The L-shaped tripping member is built up from an upper casting 94 which is combined with an intermediate casting 95 and a lower casting 96, said castings being held together by screws 98 (Fig. 3). To these combined parts there is secured at the top, as by rivets, a short contact arm 100 extending to the right, as shown in Fig. 2, while to the bottom there is secured, as by riveting, a long contact arm 102, which arms are arranged to form parts of electric circuits, as will be later described.

The accuracy of the calipering device herein illustrated is greatly increased by reason of a special form of antifriction mounting. This mounting includes (Figs. 3 and 4) diametrically opposed, grooved studs 104 and 106 extending through bosses 108 in the casing 76 and forming open bearings for the tripping lever. Each of these studs is provided with a V-shaped groove 110 (Fig. 5) to receive one of the knife edges 112, 114 formed at opposite sides of the open frame casting 95. The line of the knife edges, which constitutes the fulcrum upon which the bell crank lever is suspended, lies in the hub or vertex of the lever and near its center of gravity so that, in the position shown, the lever hangs approximately in a condition of equilibrium. The frame 95 is also provided with a boss 116 threaded internally to receive the micrometer screw 90. Displacement of the tripping member from the bearings provided by the knife edges on this member resting on the studs 104, 106 is prevented by means of a spring-pressed plug 120 disposed between said knife edges and having a groove at its lower end to receive an upstanding intermediate knife edge 122 formed on the lower frame casting 96. A spring 124 is interposed between a boss 126 on the cover of the casing 76 and a recess in the plug 120 to hold said plug against the knife edge 122 and thereby to press the tripping member into its bearings. At the same time the friction in the bearings is reduced to an almost negligible amount.

In order to maintain the tripping member in continuous contact with the feeler rod 78 so that the micrometer screw 90 will always bear firmly against the end of the rod, there is provided a spring 130 positioned in a hollow boss 131 in the cover of the casing 76 and arranged to bear against the flat outer end 132 of the intermediate frame 95. A threaded plug 134 holds the spring within the hollow boss and permits adjustments in its tension.

The movement of the tripping member may be communicated to the grinding machine so as to control the automatic feed mechanism previously described in various ways but, as herein illustrated, this communication is effected by means of electric circuits which are broken successively as the feeler rod 78 moves downwardly and the tripping member is swung about its knife-edge bearings by the spring 130, which holds the tripping member in engagement with its feeler rod and the feeler rod consequently in engagement with the work. Since this engagement between the tripping member and the feeler rod, and also the engagement between the tripping member and its knife-edge supports is assisted at all times by gravity, the springs 124 and 130 may be relatively light so as to have the least possible effect upon the calipering action of the tripping member. As herein shown, the electric circuits include contact members 140 and 142 which are flat springs and are firmly attached at one end to the casing. The outer or right-hand end of the contact spring 140 is secured by screws to a block of insulation 144 mounted in the casing. The spring is provided with a piece of insulation 146 against which bears the upper end of an adjusting screw 148 having a lock nut 150 whereby its position may be adjustably determined. The tension of the spring 140 is

such that it always bears against the screw 148 until it is lifted therefrom by the contact arm 100 on the tripping member as the calipering device is applied to an unground work piece when the feeler rod 78 and tripping lever are consequently displaced. As grinding of the work progresses, the tripping member will swing in a clockwise direction, as shown in Fig. 2, thereby to lower the arm 100 and presently to separate it from the contact spring 140.

Similarly, the contact spring 142 is mounted upon a block of insulation 152 secured to a portion of the casing 76 and engages a contact point 154 upon the lower end of the contact arm 102. This spring is also provided with an insulating separator 156 which rests against an adjusting screw 158. The adjustment of the screw 148 is such that the contact between the arm 100 and the spring 140 will be broken when the desired diameter of the work is approximated and prior to the time when further movement of the contact spring 142 is prevented by the screw 158. The circuit through the contact arm 102 and the spring 142 will be broken at a later time corresponding to the attainment of the absolute dimension required in the finished work.

The breaking of the contact between the arm 100 and the spring 140 will be effective, as will be later described, to stop the in-feed of the grinding wheel and to allow the continued light contact between the wheel and the rotating work to perform a finishing cut on the work so as to bring it to its desired final dimension. It will be clear from the preceding description that the arrangement of the improved calipering device herein disclosed is such that the absolute tension of the springs 124 and 130 cannot affect the action of the device, nor can the tension of the contact springs 140 and 142. So long as there is tension in these springs to maintain the parts in position and prevent chattering, the action of the calipering device in successively breaking the control circuits will be positive and, by reason of the fact, which will later appear more in detail, that the control circuits involve low voltage circuits, there will be no appreciable arcing between the contact springs and the contact arms as the circuits are broken.

This automatic control action may be more readily understood from an inspection of Fig. 1 in which there is indicated a low voltage source of energy such as a battery 160, one side of which is connected through the wire 162 to the arm 100 of the tripping member. The other side of the battery is connected through leads 164 and 166 to the electro-magnets of the electro-magnetic relays 168 and 170 which are illustrated diagrammatically in Fig. 1 but which will be understood to be of such a character in actual practice that the circuit controlling members thereof can be interposed in a high voltage circuit such as is commonly found in commercial installations. The other side of the magnet coil of the relay 168 is connected through a circuit 172 to the contact spring 142 in the calipering device while the other end of the winding of the magnet coil of the relay 170 is connected through the circuit 174 to the contact spring 140 of the calipering device. These relays are intended to be used to control power devices by means of which the lever 50 and the lever 68 of the gear trains, respectively, may be actuated so as to cause a cessation of the in-feed of the grinding wheel or a reverse feed thereof. Accordingly, a solenoid 176, the plunger of which is mechanically connected at 178 to the bell crank lever 50 to swing it to the right when the solenoid is energized, has a winding one end of which is connected by a circuit 180 to a wire 182 which, with the wire 184, indicate a source of high voltage power. The other end of the solenoid coil 176 is connected through a wire 186 to the movable arm of the relay 170 adapted, when deenergized, to close a circuit connecting this wire 186 to the wire 184 of the supply.

Similarly, there is provided a solenoid 190, the plunger of which is connected by a rod 192 to the arm of a lever 194 pivotally mounted upon the shaft 28 and provided with a pin at its other end engaging a notch in the bell crank lever 68. A spring 196 is arranged normally to hold up the right-hand end of the lever 194, as viewed in Fig. 1, so as to roll the tumbler gear 64 to a position where it is disengaged from the gear 60. Whenever the solenoid 190 is energized, however, it will draw down the right-hand end of the lever 94, thereby swinging the bell crank lever 68 in a counter-clockwise direction and rolling the tumbler gear 64 into engagement with the gear 60. To this end, one terminal of the solenoid coil 190 is connected through a wire 198 to the wire 182 of the source of supply, while the other terminal of the solenoid coil is connected through a wire 200 to the movable arm of the relay 168 which, when de-energized, will complete the circuit to the wire 184 of the source of power. It will be seen, therefore, that the breaking of the contacts between the tripping member and the contacts 140 and 142 within the casing of the calipering device is effective to de-energize successively the coils 170 and 168 of the relays so as to energize first the solenoid 176 and then the solenoid 190 to stop the in-feed and then to start the reverse feed of the grinding wheel.

Interruption of the reverse feed of the machine, so that the machine may be brought to a stand still and a new piece of work inserted, may be effected by means of

a switch 210 having a fixed contact 212 and a movable blade 214. This switch is inserted in a separate circuit 216 extending from the left side of the battery 160 to the wire 172 so that the relay coil 168 may be re-energized even though the circuit is not necessarily otherwise closed by the contact of the arms of the tripping member with the contact 142 in the calipering device. Inasmuch as the circuit can otherwise only be closed through the calipering device after it has been removed from the finished piece of work and applied to a new and larger piece of work, this auxiliary switch 210 is provided. The arrangement may be such that the switch is closed automatically as a result of the turning movement of the shaft 28 upon which the hand-wheel 30 is mounted. To this end the shaft 28 may be provided with a cam 218 frictionally mounted on the shaft between the flange 220 of a sleeve 222, which is splined to the shaft, and a disk 224 which is urged toward the flange 220 by springs 226 and is rotated with the sleeve 222 by a pin 228 (Fig. 7). Friction disks 230 may be interposed between the cam 218 and the flange 220 and between said cam and the disk 224, respectively. This cam 218 is provided with a shoulder 232 positioned to strike the end of the switch blade 214 to close the switch at the end of the reverse feed.

After the finished piece of work has been removed from the machine and a new piece of work inserted and the calipering device applied thereto, the energizing circuits of the relays are closed through the calipering device and the switch 210 is no longer needed. Accordingly, the cam 218 is provided with another shoulder 234 which will engage the blade 214 of the switch at the proper time in the cycle of operations while the wheel is moving towards the work for a new grinding operation and so open the switch. This cam 218 may also be provided with a notch 236 engageable by a latch 238 to hold the cam stationary when the operator desires to adjust the machine by rotation of the hand-wheel 30.

In operation, the work piece 10 is inserted in the machine and the hand-wheel 30 is rotated to bring the grinding wheel 12 into engagement with the work. The hand lever 50 is then swung to the left in Fig. 1 to throw the tumbler gear 44 into mesh with the gear 24 on the feed screw shaft so as to produce a rotation of said shaft 20 in such a direction as to cause a progressive in-feed of the grinding wheel and a reduction of the work. The adjustment of the micrometer screw 90 and of the contact controlling screws 148 and 158 will be such that when the work is originally inserted between the contact screw 84 and the feeler rod 78 the tripping member will be swung counterclockwise sufficiently to make a firm contact between the arms 100 and 102 and the coacting contact springs 140 and 142. Presumably the arrangement will ordinarily result in the lifting of these springs from their adjusting screws 148 and 158. The contact screw 84 and the feeler rod 78 will be maintained at the largest diameter of the work by the preliminary setting of the adjusting screw 86 in the caliper frame 82. The in-feed of the grinding wheel will continue until a dimension is reached closely approximating that desired in the finished work, and then the contact arm 100 will be separated from the contact spring 140 so as to break the low voltage circuit of the relay and energize the solenoid 176 to swing the lever 50 in a clockwise direction so as to interrupt the driving train of gears to cause a cessation of the in-feed. The rotation of the work 10 and the grinding wheel 12 continues, however, and the grinding operation continues while a very small further amount of material is removed from the work and until all distortion or displacement of the work by reason of the pressure between the grinding wheel and the work is dissipated. At this time the diameter of the work will have been brought to its desired final dimension and its dimension will be measured with great exactitude on account of the magnification of the movement of the lower end of the arm 102 as it breaks contact with the spring 142. When this contact is broken, the solenoid 190 will be energized through the corresponding relay, and the driving gears for the reverse feed of the carriage 16 will be thrown into mesh as the tumbler gear 64 is rolled around the gear 62 and brought into mesh with the driven gear 60. This will cause the grinding wheel to be carried quickly to an inoperative position out of the way of the work such that the operator can displace the calipering device and remove the finished piece of work and replace it by another.

At the completion of this reverse feeding movement, the shoulder 232 on the cam 218 will engage the switch blade 214 of the auxiliary switch 210 and cause the coil 168 of the relay to be re-energized so as to release the solenoids 190. When the calipering device is again brought back into engagement with the new piece of work, the circuits within the calipering device will be closed and the relays energized also to break the circuits through the solenoids 176 and 190 so that the operator can again bring up the grinding wheel through the operation of the hand-wheel 30 and start the automatic operation of the machine over again. As the in-feed progresses, the shoulder 234 of the cam 218 will engage the switch blade 214 upon the auxiliary switch, leaving the relays

under the complete control of the automatic calipering device.

Having thus described our invention, what we claim as new and desire to secure by Letters Patent is:

1. In a grinding machine, a work support and a grinding element relatively movable to effect a grinding feed, feeding mechanism, control mechanism for said feeding mechanism including electric control circuits, a calipering device including a feeler member held in contact with the work and a lever suspended in a position of approximate equilibrium and associated with said feeler member and continually urged in a direction to hold the feeler member against the work, and a series of contact springs engaging said lever, said control circuits including the lever and the contact springs, and said calipering device being constructed and arranged to cause the separation of the lever successively from the various contact springs, thereby to open the circuits associated with said contacts and to vary the action of the feeding mechanism.

2. In a grinding machine, a work support and a grinding element which are relatively movable to effect a grinding feed and electrically controlled feeding mechanism comprising a calipering device having a casing, a movable feeler mounted thereon and arranged to be held in contact with the work, a contact member fixed on said casing, a movable circuit controlling element having a contact member and being associated with but independent of said feeler, a micrometer connection between said circuit controlling element and said feeler, whereby the element may be moved by the feeler and their relative positions may be adjusted, and a spring mounted on the frame and cooperating with the feeler and the movable circuit controlling element which urges the feeler into contact with the work during the grinding operation and which serves to separate the contact members when the feeler has moved towards the work center to a predetermined position and thereafter to hold said members separated.

3. In a grinding machine, a work support and a grinding element relatively movable to effect a grinding feed, feeding mechanism, a calipering device including a casing, a feeler member movably mounted in the casing for engagement with the work to be reduced, a pivotally mounted bell crank tripping member within said casing, coacting with said feeler member and having a contact point on each arm, spring contact members mounted within said casing and insulated therefrom, and electrical circuits including said tripping member and said contacts, said contacts being arranged for displacement by engagement with the respective arms of said tripping member as the feeler member is brought into engagement with the work to be reduced and for successive separation from the tripping member upon continued movement thereof as the work is reduced, thereby to control said feeding mechanism.

4. In a grinding machine, a work support and a grinding element relatively movable to effect a grinding feed, feeding mechanism, a calipering device including a pivotally mounted tripping lever responsive to changes in the size of the work, open bearings for said tripping lever, yielding means holding said tripping lever upon said bearings, comprising a pressure plug and a knfe edge bearing between said lever and said plug, and feed-controlling contacts associated with said tripping lever.

5. In a grinding machine, a work support and a grinding element relatively movable to effect a grinding feed, feeding mechanism, a calipering device including a casing, a feeler member slidably mounted in said casing, a tripping lever pivotally mounted in the casing for coaction with said feeler member, grooved studs in said casing for supporting said tripping lever, knife-edged arms on said tripping lever resting in said grooved studs, an oppositely directed knife edge on said lever and a grooved plug resiliently pressed against said knife edge to hold the lever in the grooves of said studs, and feed-controlling contact elements controlled by said lever.

6. In a grinding machine, a work support and a grinding element relatively movable to effect a grinding feed, feeding mechanism, a calipering device including a casing, a feeler rod slidably mounted in said casing for engagement with the work, a tripping lever freely suspended in said casing and arranged to bear against said feeler rod and provided with a short arm and a long arm, resilient contact elements associated with the arms of said lever and arranged to be held in adjustably predetermined position in the casing whereby the contact elements will be displaced by said lever as the calipering device is brought into engagement with the work to be reduced and as the work is reduced the contacts will be allowed to return to their predetermined positions and eventually separated from the lever, and circuits through the lever and said contacts broken successively by continued movement of the tripping lever whereby the action of the feeding mechanism may be controlled.

7. In a grinding machine the combination of a grinding wheel, a work support, an electrically controlled feeding mechanism to move the wheel and work relative to each other, with a feed controlling calipering device including a movable feeler, a tripping member comprising a bell crank lever suspended with its longer arm substantially

vertical, means including electrical contact members actuated by said tripping member to control the feed mechanism, spaced knife edge bearings supporting said member at points substantially in line with said longer arm, yielding means for holding said member in position upon its bearings, and connections between said feeler and tripping member, which are arranged to actuate said contact members so as to control said feeding mechanism.

8. In a grinding machine the combination of a grinding wheel, a work support, an electrically controlled feeding mechanism to move the wheel and work relative to each other, with a feed controlling calipering device comprising a feeler rod mounted for endwise movement, a tripping member comprising a bell crank lever suspended with its shorter arm in line with the feeler, a micrometer connection between said feeler rod and the shorter arm of said bell crank lever located adjacent to the axis of the latter, means including electrical contact members actuated by said tripping member to control the feed mechanism and a spring acting on said arm at a point more remote from its axis for moving the tripping member as permitted by the movement of said feeler rod which is arranged to urge separation of said contact members so as to control the feeding movement between the wheel and work.

9. In a grinding machine, a work support and grinding element relatively movable to effect a grinding feed, feeding mechanism, control mechanism for said feeding mechanism including electric control circuits, a calipering device including a feeler member held in contact with the work and a lever suspended in a position of approximate equilibrium and associated with said feeler member and continually urged in a direction to hold the feeler member against the work, and a series of contact members engaging said lever, said control circuits including the lever and the contact members, and said calipering device being constructed and arranged to cause the seperation of the lever successively from the various contact members, thereby to open the circuits associated with said contacts and to vary the action of the feeding mechanism.

10. In a grinding machine the combination of a rotatable grinding wheel, a work support and a feed mechanism to move the wheel and work relative to each other, with a feed controlling calipering device comprising a tripping member suspended in a position of approximate equilbrium upon knife-edge bearings, a movable work-engaging feeler, a micrometer connection between the feeler and tripping member and means including electric contact members actuated by the tripping member to control the relative feeding movement between the grinding wheel and work.

11. In a grinding machine the combination of a grinding wheel, a work support, a feeding mechanism to move the wheel and work relative to each other, with a controlling calipering device comprising a tripping member suspended upon spaced knife-edge bearings, an intermediate inverted knife-edge bearing maintaining said tripping member in position, and a feeler associated therewith for swinging the tripping member so as to control said feeding mechanism and the relative feeding movement between the grinding wheel and work.

Signed at Worcester, Massachusetts, this 20th day of November 1928.

RAYMOND A. COLE.
ALBERT G. BELDEN.