Innovation, Sciences et Développement économique Canada
Office de la Propriété Intellectuelle du Canada

Innovation, Science and Economic Development Canada
Canadian Intellectual Property Office

CA 3096217 A1 2019/10/17

(21) 3 096 217

(12) DEMANDE DE BREVET CANADIEN
CANADIAN PATENT APPLICATION

(13) A1

(86) Date de dépôt PCT/PCT Filing Date: 2019/04/08
(87) Date publication PCT/PCT Publication Date: 2019/10/17
(85) Entrée phase nationale/National Entry: 2020/10/05
(86) N° demande PCT/PCT Application No.: US 2019/026318
(87) N° publication PCT/PCT Publication No.: 2019/199669
(30) Priorités/Priorities: 2018/04/09 (US62/654,688); 2018/09/11 (US62/729,793); 2019/04/05 (US16/376,436)

(51) Cl.Int./Int.Cl. *A61F 6/18* (2006.01), *A61F 6/14* (2006.01), *A61K 31/57* (2006.01), *A61K 9/00* (2006.01)

(71) Demandeur/Applicant:
MEDICINES360, US

(72) Inventeurs/Inventors:
DECKMAN, ROB, US;
SPONSEL, MARK ROBERT, US;
HOVDE, DAN, US;
GUYER, CURT, US

(74) Agent: BORDEN LADNER GERVAIS LLP

(54) Titre : SYSTEMES D'INSERTION DE DISPOSITIFS INTRA-UTERINS (DIU), PROCEDES ET KITS ASSOCIES
(54) Title: IUD INSERTION DEVICES AND RELATED METHODS AND KITS THEREFOR

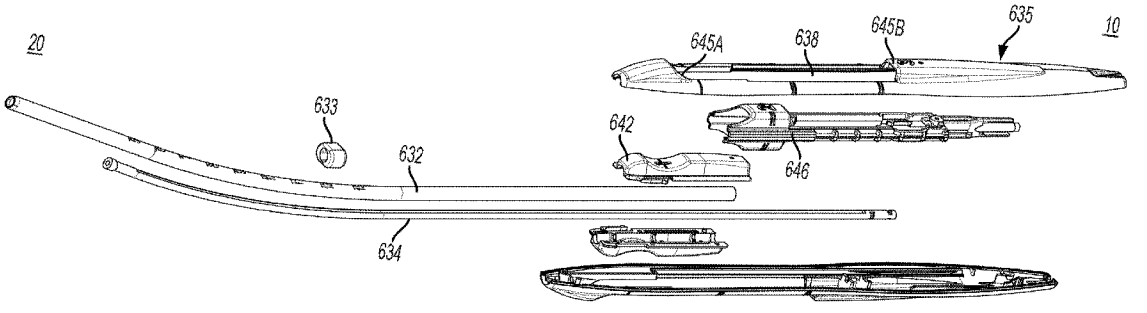

FIG. 6F

(57) Abrégé/Abstract:
Single-handed IUD insertion devices, methods and kits are disclosed. The single-handed IUD insertion devices have a plurality of flexing detent arms to control axial movement of the 641 elongated guide and string control slider during use.

(12) INTERNATIONAL APPLICATION PUBLISHED UNDER THE PATENT COOPERATION TREATY (PCT)

(19) World Intellectual Property Organization
International Bureau

(43) International Publication Date
17 October 2019 (17.10.2019)

WIPO | PCT

(10) International Publication Number
WO 2019/199669 A1

(51) International Patent Classification:
A61F 6/18 (2006.01) *A61K 9/00* (2006.01)
A61F 6/14 (2006.01) *A61K 31/57* (2006.01)

(21) International Application Number:
PCT/US2019/026318

(22) International Filing Date:
08 April 2019 (08.04.2019)

(25) Filing Language: English

(26) Publication Language: English

(30) Priority Data:

62/654,688	09 April 2018 (09.04.2018)	US
62/729,793	11 September 2018 (11.09.2018)	US
16/376,436	05 April 2019 (05.04.2019)	US

(71) Applicant: **MEDICINES360** [US/US]; 353 Sacramento St., Suite 300, San Francisco, CA 94111 (US).

(72) Inventors: **DECKMAN, Rob**; 353 Sacramento St., Ste 300, San Francisco, CA 94111 (US). **SPONSEL, Mark, Robert**; 353 Sacramento St., Ste. 300, San Francisco, CA 94111 (US). **HOVDE, Dan**; 353 Sacramento St., Suite 300, San Francisco, CA 94111 (US). **GUYER, Curt**; 353 Sacramento St., Ste 300, San Francisco, CA 94111 (US).

(74) Agent: **O'REGAN, Cecily, Anne** et al.; SHARTSIS FRIESE LLP, One Maritime Plaza - 18th Floor, San Francisco, CA 94111 (US).

(81) Designated States *(unless otherwise indicated, for every kind of national protection available)*: AE, AG, AL, AM, AO, AT, AU, AZ, BA, BB, BG, BH, BN, BR, BW, BY, BZ, CA, CH, CL, CN, CO, CR, CU, CZ, DE, DJ, DK, DM, DO, DZ, EC, EE, EG, ES, FI, GB, GD, GE, GH, GM, GT, HN, HR, HU, ID, IL, IN, IR, IS, JO, JP, KE, KG, KH, KN, KP, KR, KW, KZ, LA, LC, LK, LR, LS, LU, LY, MA, MD, ME, MG, MK, MN, MW, MX, MY, MZ, NA, NG, NI, NO, NZ, OM, PA, PE, PG, PH, PL, PT, QA, RO, RS, RU, RW, SA, SC, SD, SE, SG, SK, SL, SM, ST, SV, SY, TH, TJ, TM, TN, TR, TT, TZ, UA, UG, US, UZ, VC, VN, ZA, ZM, ZW.

(84) Designated States *(unless otherwise indicated, for every kind of regional protection available)*: ARIPO (BW, GH, GM, KE, LR, LS, MW, MZ, NA, RW, SD, SL, ST, SZ, TZ, UG, ZM, ZW), Eurasian (AM, AZ, BY, KG, KZ, RU, TJ, TM), European (AL, AT, BE, BG, CH, CY, CZ, DE, DK, EE, ES, FI, FR, GB, GR, HR, HU, IE, IS, IT, LT, LU, LV, MC, MK, MT, NL, NO, PL, PT, RO, RS, SE, SI, SK, SM, TR), OAPI (BF, BJ, CF, CG, CI, CM, GA, GN, GQ, GW, KM, ML, MR, NE, SN, TD, TG).

(54) Title: IUD INSERTION DEVICES, AND RELATED METHODS AND KITS THEREFOR

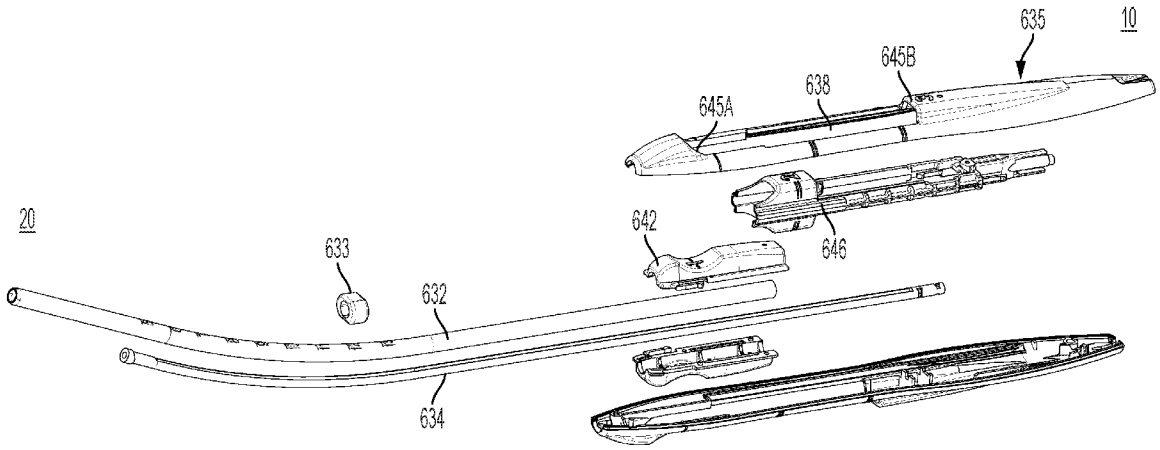

FIG. 6F

(57) Abstract: Single-handed IUD insertion devices, methods and kits are disclosed. The single-handed IUD insertion devices have a plurality of flexing detent arms to control axial movement of the 641 elongated guide and string control slider during use.

WO 2019/199669 A1

[Continued on next page]

WO 2019/199669 A1

Declarations under Rule 4.17:

— *as to applicant's entitlement to apply for and be granted a patent (Rule 4.17(ii))*

— *as to the applicant's entitlement to claim the priority of the earlier application (Rule 4.17(iii))*

Published:

— *with international search report (Art. 21(3))*

IUD INSERTION DEVICES AND RELATED METHODS AND KITS THEREFOR

CROSS-REFERENCE

[0001] This application claims priority to U.S. utility patent application **16/376,436** filed April 5, 2019, which claims the benefit of U.S. Provisional Application Nos. **62/654,688,** filed April 9, 2018, entitled IUD INSERTION DEVICES, AND RELATED METHODS AND KITS THEREFOR, and **62/729,793**, filed September 11, 2018, entitled IUD INSERTION DEVICES, AND RELATED METHODS AND KITS THEREFOR which applications are incorporated herein in their entirety by reference.

BACKGROUND

[0001] Field of the Invention: The disclosure relates to intrauterine systems (IUS), intrauterine devices (IUDs), insertion devices, methods of use, and kits therefor.

[0002] Background of the Invention: An intrauterine device (IUD) is an object that, when placed in the uterus of a female, acts as a birth control device to prevent pregnancy. Two types of IUDs are commonly available, copper-containing devices and hormone-containing devices that release a progestogen. Hormonal containing devices are considered to be a different form of birth control and may be distinguished in the literature by the term intrauterine system (IUS).

[0003] Copper IUDs work by negatively affecting the mobility of sperm and preventing the sperm from joining an egg. Additionally, the foreign copper body positioned within the uterus also irritates the lining of the uterus and uterine wall making it difficult for an embryo to plant in the wall if the egg is fertilized by the sperm. IUS devices, such as the hormonal IUD Mirena® (marketed by Bayer) reduce

or prevent menstrual bleeding. The Mirena® device releases levonorgestresl (a progestogen).

[0004] Conventional insertion devices used with IUDs (which includes devices used for IUSs) can cause pain and even loss of consciousness to a patient during the insertion procedure as a result of induction of a vagal reflex response.

[0005] As will be appreciated by those skilled in the art, a variety of shapes and sizes have been previously disclosed for IUD devices. Additionally, IUDs are typically inserted using an insertion device or instrument.

[0006] Thus, there exists a need for insertion devices adaptable and configurable for use with IUDs and related methods and kits which are easy-to-use, and operate smoothly for a healthcare practitioner using a single hand.

SUMMARY

[0007] Disclosed is an insertion device for use with an IUD. The insertion device has a handle and an elongated sheath. Two curved members forming cavities for a pair of sliders are positioned at a proximal end of the handle and a distal end of the handle. A sheath slider is positioned distally and is configurable to slide proximally within a portion of the distal cavity. When the sheath slider moves proximally, the sheath slider engages a string control slider. The sheath slider and the string control slider are configurable to engage and operate integrally when further proximal movement occurs. A small amount of force, e.g., from 0.25 to 0.75 lbs, more preferably from 0.5 to 0.75 lbs moves the sheath slider from an initial position to a second position. The small amount of force helps avoid or minimize incomplete insertions of an IUD by providing additional stability while the user loads the IUD and inserts the insertion device holding the IUD into a patient. The sheath slider is configurable so that it does not move past the string control slider. This ensures that the string control slider is

moved all the way to the proximal position allowing the release of the strings of the IUD. The configuration of the insertion device eliminates the need for an inner sleeve at a distal position within the sheath. A hard stop feature is positioned within an interior of the handle assembly. Three pairs of detent features are positioned within the interior of the housing along the length of the housing. All three detent features have a plane of action oriented 90 degrees from a plane of ultrasonic welding of the handles. Positioning the detent features 90 degrees from the plane of the ultrasonic weld minimizes any influence of the ultrasonic welding process on a detent force value. The main slider will have additional tensile holding features to secure the tube and minimize the change of the tube dislodging from the main slider. Additional torsional holding features are also provided to secure the main tube to the handle to minimize the chance of the tube rotating within the main slider. Additional strengtheners are positioned inside the handle around the weld area to minimize the handle haves from separating during removal from the packaging. The sharp edge of the cleft has been rounded to minimize breakage of the IUD strings and the string control slider and string guide are molded into a single part.

[0008] An aspect of the disclosure is directed to insertion devices for inserting an IUD. Insertion devices comprise: an elongated sheath having a proximal end and a distal end, a lumen extending between the proximal end and the distal end wherein the elongated sheath defines an axis for operation of the insertion device and wherein the IUD is positionable within the elongated sheath; an elongated inner member having a proximal end and a distal end disposable within the lumen of the elongated sheath wherein a proximal end of the IUD is positionable adjacent the distal end of the elongated inner member; and a proximally positioned user interface, wherein the proximally positioned user interface further comprises an elongated channel,a

moveable sheath slider moveable within the elongated channel wherein the moveable sheath slider has an upper surface, a lower surface and two side surfaces, further wherein the moveable sheath slider has a depression on an upper surface of the moveable sheath slider facing an exterior of the user interface, a rail along a side of the moveable sheath slider and a lateral detent arm, and a string control slider having a curved distal surface for abutting with the curved surface of the moveable sheath slider when the sheath slider is adjacent the string control slider wherein the string control slider further comprises a hard stop and one or more string control slider detent arms in an interior of the user interface and a rib.

[0009] Another aspect of the disclosure is directed to methods of inserting an IUD into a uterus with an insertion device. Suitable methods comprise the steps of: providing the insertion device wherein the insertion device comprises an elongated sheath having a proximal end and a distal end, a lumen extending between the proximal end and the distal end wherein the elongated sheath defines an axis for operation of the insertion device and wherein the IUD is positionable within the elongated sheath; an elongated inner member having a proximal end and a distal end disposable within the lumen of the elongated sheath wherein a proximal end of the IUD is positionable adjacent the distal end of the elongated inner member; and a proximally positioned user interface, wherein the proximally positioned user interface further comprises an elongated channel, a moveable sheath slider moveable within the elongated channel wherein the moveable sheath slider has an upper surface, a lower surface and two side surfaces, further wherein the moveable sheath slider has a depression on an upper surface of the moveable sheath slider facing an exterior of the user interface, a rail along a side of the moveable sheath slider and a lateral detent arm, and a string control slider having a curved distal surface for abutting with the

curved surface of the moveable sheath slider when the sheath slider is adjacent the string control slider wherein the string control slider further comprises a hard stop and one or more string control slider detent arms in an interior of the user interface and a rib; advancing the insertion device and the IUD into the uterus; actuating the sheath slider of the insertion device; at least one of moving the elongated sheath proximally and advancing the IUD distally; automatically or semi-automatically increasing a radial diameter of the IUD; and releasing the IUD from the insertion device.

[0010] Still another aspect of the disclosure is directed to methods of hormonally treating a patient. Suitable methods comprise the steps of: providing an IUD which delivers an active agent; inserting the IUD with the active agent into a uterus of a patient with an insertion device wherein the insertion device comprises an elongated sheath having a proximal end and a distal end, a lumen extending between the proximal end and the distal end wherein the elongated sheath defines an axis for operation of the insertion device and wherein the IUD is positionable within the elongated sheath; an elongated inner member having a proximal end and a distal end disposable within the lumen of the elongated sheath wherein a proximal end of the IUD is positionable adjacent the distal end of the elongated inner member; a proximally positioned user interface, wherein the proximally positioned user interface further comprises an elongated channel, a moveable sheath slider moveable within the elongated channel wherein the moveable sheath slider has an upper surface, a lower surface and two side surfaces, further wherein the moveable sheath slider has a depression on an upper surface of the moveable sheath slider facing an exterior of the user interface, a rail along a side of the moveable sheath slider and a lateral detent arm, and a string control slider having a curved distal surface for abutting with the curved surface of the moveable sheath slider when the sheath slider is adjacent the

string control slider wherein the string control slider further comprises a hard stop and one or more string control slider detent arms in an interior of the user interface and a rib; advancing the insertion device and the IUD with the active agent into the uterus; actuating the sheath slider of the insertion device; at least one of moving the elongated sheath proximally and advancing the IUD with the active agent distally; releasing the IUD with the active agent from the insertion device; and delivering the active agent from the IUD to the patient.

[0011] Another aspect of the disclosure is directed to insertion devices for inserting an IUD comprising: an elongated sheath having a proximal end and a distal end, a lumen extending between the proximal end and the distal end wherein the elongated sheath defines an axis for operation of the insertion device and wherein the IUD is positionable within the elongated sheath; an elongated inner member having a proximal end and a distal end disposable within the lumen of the elongated sheath wherein a proximal end of the IUD is positionable adjacent the distal end of the elongated inner member; and a proximally positioned user interface, wherein the proximally positioned user interface further comprises an elongated channel, a moveable sheath slider moveable within the elongated channel wherein the moveable sheath slider has an upper surface, a lower surface and two side surfaces, further wherein the moveable sheath slider has a depression on an upper surface of the moveable sheath slider facing an exterior of the user interface, a rail along a side of the moveable sheath slider and a lateral detent arm, and a string control slider having a curved distal surface for abutting with the curved surface of the moveable sheath slider when the sheath slider is adjacent the string control slider. In some configurations, the proximally positioned user interface and the sheath slider further comprise one or more alignment surfaces, wherein the one or more alignment surfaces

of the user interface is adapted and configured to mechanically complement the one or more alignment surfaces of the sheath. Additionally, a first sheath slider alignment surface can align with a first user interface alignment surface at a first position along a length of the elongated channel. The elongated channel can further comprise one or more cavities on one or more of a proximal end of the elongated channel and a distal end of the elongated channel wherein the one or more cavities are adapted and configured to house at least a portion of the movable sheath slider. The string control slider can be configured such that it is adaptable and configurable to securely move within the elongated channel. In at least some configurations, the moveable sheath slider and the string control slider are adapted and configured to operate at least one of simultaneously and independently within the elongated channel. The string slider can also be configured to partially surround and the sheath slider. The insertion device can be configurable to receive the IUD within a distal end of the lumen of the elongated sheath and wherein the insertion device further comprises at least one string locking feature adaptable and configurable to secure one or more string components of the IUD. Additionally, the distal end of the elongated sheath can have an atraumatic tip selected from the group comprising a rounded tip and a tapered tip. The moveable sheath slider can further comprise a second rail along a second side of the moveable sheath slider and a second lateral detent arm. Additionally, in at least some configurations, the moveable sheath slider further comprises a top half and a bottom half. The string control slider further can further comprise an interiorly positioned hard stop. The user interface can further comprise one or more string control slider detent arm in an interior of the user interface and a rib. In some configurations, the one or more string control slider detent arms flex inwardly and/or flex outwardly, i.e, towards a central axis or away from a central axis.

[0012] Still another aspect of the disclosure is directed to methods of inserting an IUD into a uterus with an insertion device comprising the steps of: providing the insertion device wherein the insertion device comprises an elongated sheath having a proximal end and a distal end, a lumen extending between the proximal end and the distal end wherein the elongated sheath defines an axis for operation of the insertion device and wherein the IUD is positionable within the elongated sheath, an elongated inner member having a proximal end and a distal end disposable within the lumen of the elongated sheath wherein a proximal end of the IUD is positionable adjacent the distal end of the elongated inner member, a proximally positioned user interface, wherein the proximally positioned user interface further comprises an elongated channel, a moveable sheath slider moveable within the elongated channel wherein the moveable sheath slider has an upper surface, a lower surface and two side surfaces, further wherein the moveable sheath slider has a depression on an upper surface of the moveable sheath slider facing an exterior of the user interface, a rail along a side of the moveable sheath slider and a lateral detent arm, and a string control slider having a curved distal surface for abutting with the curved surface of the moveable sheath slider when the sheath slider is adjacent the string control slider; advancing the insertion device and the IUD into the uterus; actuating the sheath slider of the insertion device; at least one of moving the elongated sheath proximally and advancing the IUD distally; automatically or semi-automatically increasing a radial diameter of the IUD; and releasing the IUD from the insertion device. The methods can further comprise the step of moving the string control slider within the elongated channel. Additionally, the step of moving the moveable sheath slider and the string control slider of the insertion device can occur simultaneously within the elongated channel. In some embodiments, the step of moving the moveable sheath slider and the

string control slider of the insertion device independently within the elongated channel. The sheath slider and the string control slider of the insertion device can also be moved telescopically along at least a first portion of the elongated channel. The IUD can deliver an active agent once inserted. The active agent can be a hormone used for the treatment of menopausal troubles or for contraception.

[0013] Yet another aspect of the disclosure is directed to methods of hormonally treating a patient comprising the steps of: providing an IUD which delivers an active agent; inserting the IUD with the active agent into a uterus of a patient with an insertion device wherein the insertion device comprises an elongated sheath having a proximal end and a distal end, a lumen extending between the proximal end and the distal end wherein the elongated sheath defines an axis for operation of the insertion device and wherein the IUD is positionable within the elongated sheath, an elongated inner member having a proximal end and a distal end disposable within the lumen of the elongated sheath wherein a proximal end of the IUD is positionable adjacent the distal end of the elongated inner member, a proximally positioned user interface, wherein the proximally positioned user interface further comprises an elongated channel, a moveable sheath slider moveable within the elongated channel wherein the moveable sheath slider has an upper surface, a lower surface and two side surfaces, further wherein the moveable sheath slider has a depression on an upper surface of the moveable sheath slider facing an exterior of the user interface, a rail along a side of the moveable sheath slider and a lateral detent arm, and a string control slider having a curved distal surface for abutting with the curved surface of the moveable sheath slider when the sheath slider is adjacent the string control slider; advancing the insertion device and the IUD with the active agent into the uterus; actuating the sheath slider of the insertion device; at least one of moving the elongated sheath proximally

and advancing the IUD with the active agent distally; releasing the IUD with the active agent from the insertion device; and delivering the active agent from the IUD to the patient. The active agent can be a hormone used for the treatment of menopausal troubles or for contraception.

[0014] Another aspect of the disclosure is directed to an insertion device for inserting an IUD comprising: an elongated sheath having a proximal end and a distal end, a lumen extending between the proximal end and the distal end wherein the elongated sheath defines an axis for operation of the insertion device and wherein the IUD is positionable within the elongated sheath; an elongated inner member having a proximal end and a distal end disposable within the lumen of the elongated sheath wherein a proximal end of the IUD is positionable adjacent the distal end of the elongated inner member; and a proximally positioned user interface, wherein the proximally positioned user interface further comprises an elongated channel, a moveable sheath slider moveable within the elongated channel wherein the moveable sheath slider has an upper surface, a lower surface and two side surfaces, further wherein the moveable sheath slider has a depression on an upper surface of the moveable sheath slider facing an exterior of the user interface, and a string control slider having a curved distal surface for abutting with the curved surface of the moveable sheath slider when the sheath slider is adjacent the string control slider wherein the string control slider further comprises an interiorly positioned hard stop. The proximally positioned user interface and the sheath slider can further comprise one or more alignment surfaces, wherein the one or more alignment surfaces of the user interface is adapted and configured to mechanically complement the one or more alignment surfaces of the sheath. In some configurations, a first sheath slider alignment surface aligns with a first user interface alignment surface at a first position

along a length of the elongated channel. The elongated channel further comprises one or more cavities on one or more of a proximal end of the elongated channel and a distal end of the elongated channel wherein the one or more cavities are adapted and configured to house at least a portion of the movable sheath slider. In some configurations, the string control slider is adaptable and configurable to securely move within the elongated channel. Additionally, the moveable sheath slider and the string control slider are adapted and configured in at least some configurations to operate at least one of simultaneously and independently within the elongated channel. The string slider can be configured to partially surround and the sheath slider in some configurations. The insertion device can be configurable to receive the IUD within a distal end of the lumen of the elongated sheath and further comprise at least one string locking feature adaptable and configurable to secure one or more string components of the IUD. The distal end of the elongated sheath can be configurable to have an atraumatic tip selected from the group comprising a rounded tip and a tapered tip. In some configurations, the moveable sheath slider further comprises a rail along a side of the moveable sheath slider and a lateral detent arm. The moveable sheath slider can further comprise a second rail along a second side of the moveable sheath slider and a second lateral detent arm. The moveable sheath slider can further comprise a top half and a bottom half in some configurations. Additionally, the user interface can further comprise one or more string control slider detent arm in an interior of the user interface and a rib. The one or more string control slider detent arms can also be configured to flex inwardly and/or flex outwardly.

[0015] Still another aspect of the disclosure is directed to methods of inserting an IUD into a uterus with an insertion device comprising the steps of: providing the

insertion device wherein the insertion device comprises an elongated sheath having a proximal end and a distal end, a lumen extending between the proximal end and the distal end wherein the elongated sheath defines an axis for operation of the insertion device and wherein the IUD is positionable within the elongated sheath; an elongated inner member having a proximal end and a distal end disposable within the lumen of the elongated sheath wherein a proximal end of the IUD is positionable adjacent the distal end of the elongated inner member; and a proximally positioned user interface, wherein the proximally positioned user interface further comprises an elongated channel, a moveable sheath slider moveable within the elongated channel wherein the moveable sheath slider has an upper surface, a lower surface and two side surfaces, further wherein the moveable sheath slider has a depression on an upper surface of the moveable sheath slider facing an exterior of the user interface, and a string control slider having a curved distal surface for abutting with the curved surface of the moveable sheath slider when the sheath slider is adjacent the string control slider wherein the string control slider further comprises an interiorly positioned hard stop; advancing the insertion device and the IUD into the uterus; actuating the sheath slider of the insertion device; at least one of moving the elongated sheath proximally and advancing the IUD distally; automatically or semi-automatically increasing a radial diameter of the IUD; and releasing the IUD from the insertion device. The methods can further comprise the step of moving the string control slider within the elongated channel. Additionally, the step of moving the moveable sheath slider and the string control slider of the insertion device can occur simultaneously within the elongated channel. In some embodiments, the step of moving the moveable sheath slider and the string control slider of the insertion device independently within the elongated channel. The sheath slider and the string control slider of the insertion device can also

be moved telescopically along at least a first portion of the elongated channel. The IUD can deliver an active agent once inserted. The active agent can be a hormone used for the treatment of menopausal troubles or for contraception.

[0016] Another aspect of the disclosure is directed to methods of hormonally treating a patient comprising the steps of: providing an IUD which delivers an active agent; inserting the IUD with the active agent into a uterus of a patient with an insertion device wherein the insertion device comprises an elongated sheath having a proximal end and a distal end, a lumen extending between the proximal end and the distal end wherein the elongated sheath defines an axis for operation of the insertion device and wherein the IUD is positionable within the elongated sheath; an elongated inner member having a proximal end and a distal end disposable within the lumen of the elongated sheath wherein a proximal end of the IUD is positionable adjacent the distal end of the elongated inner member; a proximally positioned user interface, wherein the proximally positioned user interface further comprises an elongated channel, a moveable sheath slider moveable within the elongated channel wherein the moveable sheath slider has an upper surface, a lower surface and two side surfaces, further wherein the moveable sheath slider has a depression on an upper surface of the moveable sheath slider facing an exterior of the user interface, and a string control slider having a curved distal surface for abutting with the curved surface of the moveable sheath slider when the sheath slider is adjacent the string control slider wherein the string control slider further comprises an interiorly positioned hard stop; advancing the insertion device and the IUD with the active agent into the uterus; actuating the sheath slider of the insertion device; at least one of moving the elongated sheath proximally and advancing the IUD with the active agent distally; releasing the IUD with the active agent from the insertion device; and delivering the active agent

from the IUD to the patient. The active agent can be a hormone used for the treatment of menopausal troubles or for contraception.

[0017] Another aspect of the disclosure is directed to insertion device for inserting an IUD comprising: an elongated sheath having a proximal end and a distal end, a lumen extending between the proximal end and the distal end wherein the elongated sheath defines an axis for operation of the insertion device and wherein the IUD is positionable within the elongated sheath; an elongated inner member having a proximal end and a distal end disposable within the lumen of the elongated sheath wherein a proximal end of the IUD is positionable adjacent the distal end of the elongated inner member; and a proximally positioned user interface, wherein the proximally positioned user interface further comprises an elongated channel, a moveable sheath slider moveable within the elongated channel wherein the moveable sheath slider has an upper surface, a lower surface and two side surfaces, further wherein the moveable sheath slider has a depression on an upper surface of the moveable sheath slider facing an exterior of the user interface, and a string control slider having a curved distal surface for abutting with the curved surface of the moveable sheath slider when the sheath slider is adjacent the string control slider wherein the string control slider further comprises one or more string control slider detent arms in an interior of the user interface and a rib. The proximally positioned user interface and the sheath slider can further comprise one or more alignment surfaces, wherein the one or more alignment surfaces of the user interface is adapted and configured to mechanically complement the one or more alignment surfaces of the sheath. Additionally, a first sheath slider alignment surface can align with a first user interface alignment surface at a first position along a length of the elongated channel. The elongated channel can further comprise one or more cavities on one or

more of a proximal end of the elongated channel and a distal end of the elongated channel wherein the one or more cavities are adapted and configured to house at least a portion of the movable sheath slider. The string control slider, in some configurations, is adaptable and configurable to securely move within the elongated channel. The moveable sheath slider and the string control slider are also adaptable and configurable to operate at least one of simultaneously and independently within the elongated channel. The string slider can also be configured to partially surrounds and the sheath slider. In some configurations, the insertion device is configurable to receive the IUD within a distal end of the lumen of the elongated sheath and wherein the insertion device further comprises at least one string locking feature adaptable and configurable to secure one or more string components of the IUD. The distal end of the elongated sheath can have an atraumatic tip selected from the group comprising a rounded tip and a tapered tip. Additionally, the moveable sheath slider can further comprise a second rail along a second side of the moveable sheath slider and a second lateral detent arm. In some configurations, the moveable sheath slider further comprises a top half and a bottom half. The moveable sheath slider further comprises a rail along a side of the moveable sheath slider and a lateral detent arm. The user interface can further comprise a hard stop. Additionally, one or more string control slider detent arms can flex inwardly and/or flex outwardly.

[0018] Still another aspect of the disclosure is directed to methods of inserting an IUD into a uterus with an insertion device comprising the steps of: providing the insertion device wherein the insertion device comprises an elongated sheath having a proximal end and a distal end, a lumen extending between the proximal end and the distal end wherein the elongated sheath defines an axis for operation of the insertion device and wherein the IUD is positionable within the elongated sheath; an elongated

inner member having a proximal end and a distal end disposable within the lumen of the elongated sheath wherein a proximal end of the IUD is positionable adjacent the distal end of the elongated inner member; and a proximally positioned user interface, wherein the proximally positioned user interface further comprises an elongated channel, a moveable sheath slider moveable within the elongated channel wherein the moveable sheath slider has an upper surface, a lower surface and two side surfaces, further wherein the moveable sheath slider has a depression on an upper surface of the moveable sheath slider facing an exterior of the user interface, and a string control slider having a curved distal surface for abutting with the curved surface of the moveable sheath slider when the sheath slider is adjacent the string control slider wherein the string control slider further comprises one or more string control slider detent arms in an interior of the user interface and a rib; advancing the insertion device and the IUD into the uterus; actuating the sheath slider of the insertion device; at least one of moving the elongated sheath proximally and advancing the IUD distally; automatically or semi-automatically increasing a radial diameter of the IUD; and releasing the IUD from the insertion device. The methods can further comprise the step of moving the string control slider within the elongated channel. Additionally, the step of moving the moveable sheath slider and the string control slider of the insertion device can occur simultaneously within the elongated channel. In some embodiments, the step of moving the moveable sheath slider and the string control slider of the insertion device independently within the elongated channel. The sheath slider and the string control slider of the insertion device can also be moved telescopically along at least a first portion of the elongated channel. The IUD can deliver an active agent once inserted. The active agent can be a hormone used for the treatment of menopausal troubles or for contraception.

[0019] Yet another aspect of the disclosure is directed to methods of hormonally treating a patient comprising the steps of: providing an IUD which delivers an active agent; inserting the IUD with the active agent into a uterus of a patient with an insertion device wherein the insertion device comprises an elongated sheath having a proximal end and a distal end, a lumen extending between the proximal end and the distal end wherein the elongated sheath defines an axis for operation of the insertion device and wherein the IUD is positionable within the elongated sheath; an elongated inner member having a proximal end and a distal end disposable within the lumen of the elongated sheath wherein a proximal end of the IUD is positionable adjacent the distal end of the elongated inner member; a proximally positioned user interface, wherein the proximally positioned user interface further comprises an elongated channel, a moveable sheath slider moveable within the elongated channel wherein the moveable sheath slider has an upper surface, a lower surface and two side surfaces, further wherein the moveable sheath slider has a depression on an upper surface of the moveable sheath slider facing an exterior of the user interface, and a string control slider having a curved distal surface for abutting with the curved surface of the moveable sheath slider when the sheath slider is adjacent the string control slider wherein the string control slider further comprises one or more string control slider detent arms in an interior of the user interface and a rib; advancing the insertion device and the IUD with the active agent into the uterus; actuating the sheath slider of the insertion device; at least one of moving the elongated sheath proximally and advancing the IUD with the active agent distally; releasing the IUD with the active agent from the insertion device; and delivering the active agent from the IUD to the patient. The active agent can be a hormone used for the treatment of menopausal troubles or for contraception.

INCORPORATION BY REFERENCE

[0020] All publications, patents, and patent applications mentioned in this specification are herein incorporated by reference to the same extent as if each individual publication, patent, or patent application was specifically and individually indicated to be incorporated by reference.

[0021] U.S. Patent **3,407,806 A** to Hulka et al. for Contraceptive Intra-Uterine Devices issued October 29, 1968;

[0022] U.S. Patent **3,783,861 A** to Abramson for Inserter for Intrauterine Devices issued January 8, 1974;

[0023] U.S. Patent **3,794,025 A** to Lerner for Intrauterine Device Saddle Inserter issued February 26, 1974;

[0024] U.S. Patent **3,902,483 A** to Place et al. for Intrauterine Device with Locator Means for Indicating Uterine Position of Device issued September 2, 1975;

[0025] U.S. Patent **3,937,217 A** to Kosonen for Intrauterine Contraceptive Device issued February 10, 1976;

[0026] U.S. Patent **4,353,363 A** to Quesada for Intrauterine Spermicide issued October 12, 1982;

[0027] U.S. Patent **4,359,046 A** to Shaw Jr. for IUD Arrangement issued November 16, 1982;

[0028] U.S. Patent **4,372,302 A** to Akerlund for Instrument for Retrieval of Retracted Threads of Intrauterine Contraceptive Devices issued February 8, 1983;

[0029] U.S. Patent **4,381,001 A** to Shaw Jr. for IUD Arrangement issued April 26, 1983;

[0030] U.S. Patent **4,495,934 A** to Shaw Jr. for IUD Arrangement issued January 29, 1985;

[0031] U.S. Patent **4,830,025 A** to Gainutdinova et al. for Intrauterine Contraceptive Device issued May 16, 1989;

[0032] U.S. Patent **4,920,727 A** to Ristimaki et al. for Cassette System and Apparatus for Manufacturing an Active Agent Liberating Capsule for Subcutnaeous Use issued May 1, 1990;

[0033] U.S. Patent **4,949,732 A** to Spoon et al. for Apparatus for Insertion and Fixation of an Intra Uterine Contraceptive Device to the Uterine Fundus issued August 21, 1990;

[0034] U.S. Patent **4,957,119 A** to de Nijs for Contraceptive Implant issued September 18, 1990;

[0035] U.S. Patent **5,084,004 A** to Ranoux for Process for Intra-Uterine Fertilization in Mammals and Device for Implementation Thereof issued January 28, 1992;

[0036] U.S. Patent **5,088,505 A** to de Nijs for Contraceptive Implant issued February 18, 1992;

[0037] U.S. Patent **5,370,129 A** to Diaz et al. for IUD Inserting Apparatus issued December 6, 1994;

[0038] U.S. Patent **5,400,804 A** to Helle et al. for Method and Equipment for Installing a Medicine Capsule on a Support issued March 28, 1995;

[0039] U.S. Patent **5,785,053 A** to Macandrew et al. for Inserter for the Positioning of an Intrauterine Device issued July 28, 1998;

[0040] U.S. Patent **6,039,968 A** to Nabahi for Intravaginal Drug Delivery Device issued March 21, 2000;

[0041] U.S. Patent **6,056,976 A** to Markkula et al. for Elastomer, Its Preparation and Use issued May 2, 2000;

[0042] U.S. Patent **6,063,395 A** to Markkula et al. for Drug Delivery Device Especially for the Delivery of Progestins and Estrogens issued May 16, 2000;

[0043] U.S. Patent **6,103,256 A** to Nabahi for Intravaginal Drug Delivery Device issued August 15, 2000;

[0044] U.S. Patent **6,117,442 A** to Markkula et al. for Drug Delivery Device, Especially for the Delivery of Androgens issued September 12, 2000;

[0045] U.S. Patent **7,862,552 B2** to McIntyre et al. for Medical Devices for Treating Urological and Uterine Conditions issued January 4, 2011;

[0046] U.S. Patent **US 10,028,858 B2** to Deckman et al. for Intrauterine Systems, IUD Insertion Devices, and Related Methods and Kits Therefor issued July 24, 2018;

[0047] U.S. Patent Pub. **US 2005/0045183 A1** to Callister et al. for Methods and Devices for Occluding Body Lumens and/or for Delivering Therapeutic Agents issued March 3, 2005; and

[0048] U.S. Patent Pub. **US 2008/0095825 A1** to LaFont for Method for Making a Reservoir Containing an Active Substance Diffused Through the Reservoir and Installation Therefor published April 24, 2008.

BRIEF DESCRIPTION OF THE DRAWINGS

[0049] The novel features of the invention are set forth with particularity in the appended claims. A better understanding of the features and advantages of the present invention will be obtained by reference to the following detailed description that sets forth illustrative embodiments, in which the principles of the invention are utilized, and the accompanying drawings of which:

[0050] **FIGS. 1A-1C** illustrate a conventional two-handed IUD insertion device;

[0051] **FIG. 2** illustrates a conventional t-shaped IUD;

[0052] FIGS. 3A-3D illustrate positioning of an IUD during the first phase of IUD insertion, **FIG. 3A** illustrates a demonstrator (representing a portion of the female anatomy) with an IUD positioned within a portion corresponding to a cervical canal, **FIG. 3B** illustrates an IUD positioned within a distal end of a sheath, **FIG. 3C** illustrates another cross-section of an IUD positioned within a distal end of a sheath, and **FIG. 3D** illustrates a view down the barrel from the distal end of the IUD and sheath;

[0053] FIGS. 4A-4C illustrate positioning of an IUD within an insertion device during transition from a first phase of an IUD insertion process where the IUD arms are fully positioned within the distal end of the sheath (**FIG. 4A),** begin to extend from the distal end of the sheath **(FIG. 4B)** and are fully extended beyond the distal end of the sheath **(FIG. 4C);**

[0054] FIGS. 4D-4E illustrate positioning of an IUD within an insertion device through the second phase of IUD insertion, wherein the IUD arms engage the side walls of the demonstrator (**FIG. 4D)** which represents the uterus, and where the IUD is extended towards the far wall of the demonstrator (**FIG. 4E)** which represents the fundus;

[0055] FIG. 5A illustrates positioning of an IUD with the IUD arms engaging the side walls of the demonstrator;

[0056] FIG. 5B illustrates an IUD deployed from the insertion device within the interior of the uterus;

[0057] FIG.6A illustrates a top view and **FIG. 6B** illustrates a side view of an insertion device with telescoping sliders; **FIG. 6C** illustrates a prior interior view of the handle of the insertion device; **FIG. 6D** illustrates an interior of an exemplar insertion device; **FIG. 6E** illustrates an interior of an alternative exemplar insertion

device; **FIG. 6F** is an exploded view of the insertion device of **FIG. 6D**; **FIG. 6G** is an exploded view of the insertion device of **FIG. 6E**;

[0058] FIGS. 7-16 are detailed views of components of the insertion device shown in **FIG. 6A-E;**

[0059] FIG. 7A illustrates a first embodiment of a sheath slider;

[0060] FIG. 7B illustrates a second embodiment of a sheath slider;

[0061] FIG. 7C illustrates the first embodiment of a sheath slide positioned within an interior of insertion device handle in a first configuration;

[0062] FIG. 7D illustrates the first embodiment of a sheath slide positioned within an interior of insertion device handle in a second configuration;

[0063] FIG. 8 illustrates a portion of the string control slider and the insertion device handle;

[0064] FIG. 9 illustrates portion of the insertion device handle with a sheath slider positioned underneath a string control slider;

[0065] FIG. 10 illustrates a portion of a cross-section of the elongated sheath with an IUD positioned therein;

[0066] FIG. 11 illustrates an interior of a portion of the distal end of the insertion device handle;

[0067] FIG. 12A illustrates an interior portion of the distal end of the insertion device with the sheath slider detents engaging detents in a first configuration at a first position;

[0068] FIG. 12B illustrates an interior portion of the distal end of the insertion device with the sheath slider detent and detent in a second configuration at a first position;

[0069] FIG. 12C illustrates an interior portion of the insertion device with ribs engaging detents at a second position;

[0070] FIG. 12D illustrates an interior portion of the insertion device with the string control slider detents at a third position;

[0071] FIG. 12E illustrates an interior portion of the insertion device with the string control slider detents at a third position;

[0072] FIG. 13A illustrates an interior view of a first configuration of a sheath slider;

[0073] FIG. 13B illustrates an interior view of a second configuration of a sheath slider;

[0074] FIG. 13C illustrates an interior view of a third configuration of a sheath slider;

[0075] FIG. 14 illustrates a portion of the insertion device handle showing the interface between the top and bottom halves;

[0076] FIG. 15 illustrates a cut-away portion of an insertion device handle with a string control surface;

[0077] FIG. 16 illustrates a string control slider; and

[0078] FIGS. 17A-C illustrate the proximal and distal end of the insertion device at phase 1 of the insertion process (**FIG. 17A**), phase 2 of the insertion process (**FIG. 17B**) and phase 3 of the insertion process (**FIG. 17C**).

DETAILED DESCRIPTION

I. INSERTION PROCEDURE

[0079] One type of intrauterine insertion devices is a two-handed insertion device **100** or inserter such as the two-handed insertion device **100** shown in **FIGS. 1A-1C**. The two-handed insertion device **100** includes a sheath **132** having a proximal end **10** and a distal end **20** and a lumen extending between the proximal end and the distal end for housing the IUD. A plunger **134** is provided for pushing and IUD through the sheath when deploying the IUD within a uterus of a patient. User interface, such as a handle **135,** is provided for holding the two-handed insertion device **100**. When in use, an

operator (healthcare provider) holds the handle **135** of the two-handed insertion device shown in **FIGS. 1A-1C** in one hand and the sheath **132** with the other hand. When the insertion device is positioned within the uterus of a patient, the handle **135** is moved distally to push the IUD, which is positioned within the sheath **132**, out the distal end of the sheath **132.** Once the IUD is pushed out of the distal end of the sheath, the IUD is deployed within the uterus of the patient.

[0080] As will be discussed in more detail below, in contrast to two-handed insertion devices, such as depicted in **FIG. 1A-C,** the insertion devices of the present disclosure are configured to house an IUD during the insertion procedure and is further configured to aid in positioning the IUD during the insertion procedure as well as advancing the IUD from the insertion device into a patient's uterus. The insertion devices are adaptable and configurable for insertion of a variety of IUDs configurations. Moreover, the insertion devices can be operated with a single hand. The insertion devices also provide tactile feedback to the user during the insertion steps.

[0081] The insertion devices can, for example, be used with a t-shaped IUD **202**, such as the IUD as shown in **FIG. 2**. IUDs typically have a length of from about 31.90 mm to about 32.22 mm and a width of from about 31.81 mm to about 32.13 mm when the IUD is in the fully deployed position. As will be appreciated by those skilled in the art, the length does not include the knot or strings that may accompany the IUD. The t-shaped IUD comprises an elongated body **204** having a proximal end **10** and a distal end **20**. The elongated body **204** can include a coating such as a time-release drug or hormone. The elongated body **204** can be formed from any suitable material, including, but not limited to plastic or copper. At the distal end **20** of the IUD (i.e., the end positioned away from the physician's hand), IUD arms **206a**, **206b** are

attached to or integrally formed with the elongated body **204**. The IUD arms **206a**, **206b** are configurable to fold upward **u** or downward **d** to minimize the IUD cross-section such that the IUD can fit into an insertion device sheath or tube for insertion through the cervix and into the uterus. Additionally, either or both of the IUD arms **206a, 206b** are configurable to include an enlarged or bulbous tips **208a, 208b**, which can, for example, have a curved, spherical or semi-spherical shape. The bulbous tips **208a, 208b** of the IUD arms **206a, 206b** can be formed such that the IUD arms, when folded upward and pushed together, form a smooth and rounded distal tip, for example, as shown in **FIGS. 3B-3C** and described below. At the proximal end of the t-shaped IUD **202**, the IUD can further include one or more strings **210a, 210b** attached to the IUD. The strings are connectable to the IUD at a connection point **211**, e.g., tied in a knot as illustrated.

[0082] Although the insertion devices are generally described herein with regard to a t-shaped IUD such as the IUD shown in **FIG. 2**, it should be noted that the insertion devices of the present disclosure are adaptable to facilitate insertion of other IUD configurations, as would be appreciated by a person of skill in the art. Moreover, insertion device operation and IUD insertion procedures can include any number of steps corresponding to a desired IUD position. In addition to the features described below, the insertion devices of the present disclosure include IUD position control features which may be advantageous for insertion of IUDs having a variety of configurations. For example, while the IUD insertion procedure described below refers to a three-phase procedure corresponding to three different IUD positions, the insertion device operation procedure can include less than three or more than three steps. Accordingly, the insertion devices can include any number of position control features corresponding to the desired IUD positions. The insertion device of the

present disclosure can be used with various conventional IUDs available on the market, including such devices as the T-frame LNg-20 IUD, marketed as Mirena® by Bayer®, as well as the Neo-Safe CuT 380A™ available from Mona-Lisa™.

[0083] Insertion devices disclosed herein are configurable to operate according to procedural steps which generally mimic commonly known and used procedures for IUD insertion. However, the insertion devices of the present disclosure include improvements in the structure and operation of the insertion devices. In another aspect of the disclosed insertion devices, procedural steps for IUD insertion include: (i) insertion device preparation procedures that occur pre-insertion, (ii) a first phase of IUD insertion (also referred to herein as phase 1, position 1, or step 1), (iii) a second phase of IUD insertion (also referred to herein as phase 2, position 2, or step 2), (iv) a third phase of IUD insertion (also referred to herein as phase 3, position 3, or step 3), and (v) post-insertion procedures. The positioning and operation of the insertion devices during the first phase through third phase are discussed in more detail below with respect to **FIGS. 17A-17C.**

[0084] Insertion device preparation procedures that occur pre-insertion include, for example, loading a t-shaped IUD **202**, such as the IUD illustrated in **FIG. 2,** into an insertion device, aligning the t-shaped IUD **202** in-plane with a patient, positioning the t-shaped IUD **202** in a correct longitudinal position along the length of a sheath of the insertion device, and locking the IUD into a position for insertion. As will be appreciated by those skilled in the art, loading the IUD into the insertion device can occur as part of Such insertion device preparation procedures are described in further detail below.

[0085] FIGS. 3A-3C illustrate positioning of the distal tip of an insertion device **300** during a first phase of IUD insertion according to an aspect of the present disclosure

using a demonstrator **333** to represent patient anatomy. The demonstrator **333** has a cervical canal **321** area and a uterus **314** area.

[0086] In **FIG. 3A,** the insertion device **300** is sized and configured for positioning within a uterus, having a tube length (or working length) of from 15 cm to 25 cm, and a diameter of 3mm to about 5 mm. A distal end **20** of a sheath **332,** having a proximal end and a distal end and a sheath lumen extending between the proximal end and the distal end, is advanced through a cervical canal such that the sheath **332** protrudes slightly into the uterus (uterus **314** area of the demonstrator **333).** The t-shaped IUD **202** is not yet deployed and remains within the sheath **332**. The bulbous tips **208a, 208b** of the t-shaped IUD **202** may be partially deployed to create a rounded shape at the distal end **20** of the insertion device **300**, as shown in **FIG. 3B**, while the elongated body **204** of the t-shaped IUD **202** remains positioned within the elongated lumen of the sheath **332** Alternatively, in aspects where the sheath **332** of the insertion device **300** or other feature provides a rounded distal tip, the IUD arms **206a, 206b** are encasable by the sheath **332**, as shown in the cross-section taken along the lines B-B in **FIG. 3B** and shown in **FIG. 3C**. In a first dimension, the diameter of the IUD when it is fully positioned within the sheath **332** will be smaller than a second, larger, diameter when the IUD is advanced distally beyond the tip of the sheath **332** so that the IUD arms **206a, 206b** extend away from a central axis of the t-shaped IUD **202**. A reservoir **220** can be provided for containing an active agent.

[0087] FIG. 3D illustrates a view down the barrel of the device taken from the view **D-D** in **FIG. 3B** of the insertion device **300**, during a first phase of IUD insertion according to an aspect of the present disclosure. Aperture **331** has a diameter **d1** that is smaller than the diameter **d2** of the sheath **332**. The t-shaped IUD **202** is rotatable **r** in-plane about longitudinal axis **x** as shown in **FIG. 3D**, such that the IUD arms **206a,**

206b, or similar features of the IUD will deploy in-line with respective openings of the patient's fallopian tubes.

[0088] A contraceptive device, which is available on the market and which releases levonorgestrel, consists of a t-shaped IUD **202** having an elongated body **204** fabricated of polyethylene equipped with a reservoir **220** adjusted around the elongated body **204** and containing, for example, the hormone levonorgestrel. Thus, the IUD is configurable to comprise a core part around which a jacket-like polymeric reservoir containing an active agent has been fitted. The active agent includes hormones used for the treatment of menopausal troubles or for contraception. The IUD is sold in sterile packaging together with the inserter with the plunger contained within the protecting tube. The t-shaped IUD **202** can be positioned at the forward end of the plunger (distal end) with the hormone-containing elongate member protected by the sheath **132**. The IUD arms **206a, 206b** of the transverse member, on the other hand, are expanded in order to prevent fatigue. The strings **210a, 210b** by which the t-shaped IUD **202** is retracted towards the outside of a patient during removal (e.g., pulled proximally) run between the plunger **134** and the sheath **132 (**e.g., protective tube) and end at the end of the handle **135**.

[0089] FIGS. 4A-4C depict a cross-section of the t-shaped IUD **202** positioned in a distal end **20** of an insertion device **400** taken along the lines **4-4** of **FIG. 3B.** Initially, the t-shaped IUD **202** is fully positioned within the sheath **432** of the insertion device (**FIG. 4A** during phase 1**)**. Once the insertion device is positioned within the uterus, the t-shaped IUD **202** is advanced distally so that the IUD arms **206a, 206b** begin to exit the sheath **432** of the insertion device **400** (**FIG. 4B** during phase 1**)**.

[0090] Once the IUD is advanced distally the IUD arms **206a, 206b** of the t-shaped IUD **202** extend radially away from a central axis **x** when the IUD arms **206a, 206b** are clear of the distal end of the sheath during phase 2 of the insertion process.

[0091] FIGS. 4D-4E illustrate positioning of an insertion device **400** during phase 2 of the IUD insertion procedure using a demonstrator **433** to represent the patient anatomy. The t-shaped IUD **202** is partially deployed (similar to **FIG. 4C)** such that the elongated body **204** of the t-shaped IUD **202** remains positioned within the sheath **432**, and the IUD arms **206a, 206b** of the t-shaped IUD have been fully released from the sheath **432** and unfold to extend outward from the elongated body **204** of the t-shaped IUD **202**. As shown in **FIG. 4D**, the insertion device **400** is extended distally into the uterus, represented by the demonstrator **433,** until a flange **434** reaches a set distance from an external orifice **422** of the cervix **420**, and the IUD is partially deployed from the sheath **432** of the insertion device **400** into the uterus. A clinician operating the insertion device **400** can, during use, maintain a position shown in **FIG. 4D** for a period of time, e.g., 10-25 seconds, and more often 15 seconds, to ensure that the IUD arms **206a, 206b** of the t-shaped IUD are fully unfolded or expanded to the desired position or configuration. Subsequently, as shown in **FIG. 4E**, the insertion device **400** is advanced distally until the flange **434** reaches the external orifice of the cervix **420**, at which point the IUD arms **206a, 206b** of the t-shaped IUD **202** contact the fundus **416** of the uterus.

[0092] FIGS. 5A-5B illustrate positioning of a t-shaped IUD **202** during phase 3 of an insertion procedure. The t-shaped IUD **202** is completely deployed from the insertion device into the uterus (shown as the demonstrator **433** in **FIG. 5A).**

[0093] FIG. 5B provides a planar view showing a detailed illustration of the relevant female anatomy, including the uterus **514**, fundus **516**, openings of the fallopian tubes

518a, 518b, cervix **520**, cervical canal **521**, external orifice **522** of the cervix **520**, and internal orifice **523** of the cervix **520**. Once inserted, the IUD strings **210** extend from the uterus **514,** through the cervix **520**, and into the vagina **524**, as shown in **FIG. 5B**.

[0094] Upon completion of the IUD insertion phase, post-insertion procedures can be performed, such as removal of the insertion device sheath from the patient and trimming the IUD strings to an appropriate length for a particular patient.

[0095] The insertion devices of the present disclosure demonstrate improved device structure and operation technique, as well as increased ease of operability for the user. The insertion devices of the present disclosure are configured to reduce pain and trauma suffered by patients during the IUD insertion procedure. Most women have a cervix which varies in diameter of the opening from about 1 to about 3 millimeters. The size and shape of the cervix varies widely with the patient's age, the patient's hormonal state, and whether the patient has born a child via vaginal birth. However, the IUD and insertion device typically have a diameter larger than the diameter of the cervical canal, especially at the external orifice and internal orifice of the cervix or uterus. Such a mismatch between the diameters of the cervix and insertion device creates a resistive pathway for IUD insertion which can hinder proper insertion of the IUD and result in a traumatic insertion for the patient. Diameters of IUDs and traditional insertion devices are large compared to the typical female human cervical canal into which the IUD and applicator are inserted during the IUD insertion process. As will be appreciated by those skilled in the art, traumatic IUD insertion procedures can cause a variety of adverse side effects including, but not limited to, bleeding, intense pain, and an adverse vasovagal response, which can result in fainting or seizure.

[0096] Pain during the IUD insertion procedure is reduced by the structure and operation of the insertion device, as well as by the ease of operability of the insertion device. Traumatic insertion can result from difficulties in operating the IUD insertion tool, malfunctioning of the insertion device, improper IUD positioning during insertion, operator error, and inherent design features of the insertion device itself. The insertion devices of the present disclosure are configured to reduce resistance and friction during the IUD insertion process. The insertion devices are configurable to operate smoothly, quickly, steadily, easily, and in a highly controlled and consistent manner, thereby reducing trauma to the patient during insertion and deployment of the IUD.

[0097] The present disclosure provides insertion device structures and operation which controls the position of the IUD during various phases of the insertion procedure. Traditional insertion devices do not provide a reliable mechanism to position the IUD and maintain appropriate IUD positioning throughout the insertion procedure. Securing the IUD in the proper location during multiple stages of insertion is important for proper and painless insertion. Improper IUD positioning such as misalignment and premature or late deployment of the IUD can cause unsuccessful and painful insertion. The present disclosure provides improved position control through the use of position control features for control of both in-plane and longitudinal alignment of the IUD during the insertion procedure. In an aspect of the disclosed devices, the insertion device further includes position control feedback or signal features to provide verification and assurance of proper IUD positioning.

II. IUD Position & Alignment Control

[0098] The insertion devices of the present disclosure are configurable to exhibit a high degree of control and accuracy of the position of an IUD during an IUD insertion

procedure using one hand. The insertion devices are configured to prevent the sheath slider from advancing distally beyond the distal cavity.

[0099] As will be appreciated by those skilled in the art, it is important to control the positioning and alignment of the IUD with a high degree of accuracy during the IUD insertion procedure. For example, in the IUD insertion procedure illustrated in **FIGS. 3-5** and discussed above, it is important to control the longitudinal position of the IUD, in-plane alignment of the IUD, and cross-section of the t-shaped IUD **202** and insertion device sheath.

[00100] As discussed above, the t-shaped IUD **202** is rotatable **r** in-plane about longitudinal axis **x** as shown in **FIG. 3D**, such that the IUD arms or similar features of the IUD will deploy in-line with respective openings of the fallopian tubes **518a, 518b** of the patient, as shown in **FIG. 5B**, to achieve an in-plane alignment. Generally speaking, when an IUD is in an in-plane alignment the IUD is laid flat, or substantially flat, within a plane defined by the openings of fallopian tubes **518a, 518b** and cervical canal **521**, such as the coronal plane shown **x-y** in **FIG. 5B**. The IUD arms **206a, 206b**, or the like functional feature for a non-t-shaped IUDs, will be positioned near the openings of the fallopian tubes **518a, 518b** when the IUD is deployed. The proximal end of the elongated body **204** of the t-shaped IUD is proximate to the internal orifice **523** of the cervix, and the IUD strings **210** extend proximally from the t-shaped IUD **202** into the vagina **524**.

[00101] During phase 1 of the insertion procedure, as shown in **FIGS. 4A-4B**, the t-shaped IUD **202** is positioned within an insertion device **400** such that the t-shaped IUD **202** will not prematurely deploy but will deploy readily during the transition to phase 2 of the insertion procedure (**FIG. 4C**). The cross-section of a distal end **20** of the insertion device **400** is configurable such that it presents a

minimal diameter along a longitudinal portion of the insertion device that is inserted into a patient's cervix and uterus, and the distal end **20** of the insertion device **400** is further configurable to present a distal end that is rounded or curved, smooth, and free of blunt or abrupt features. The use of a rounded distal tip which is free of blunt or abrupt features reduces or eliminates harm or trauma to the patient and reduces any impediment to smooth insertion of the insertion device through the cervical canal and into the uterus. The t-shaped IUD **202** is preferably deployed into the uterus having in-plane alignment such that the deployed IUD will be substantially in, for example, a coronal plane as discussed above.

III. IUDs and Hormones

[00102] A contraceptive device, which is available on the market and which releases levonorgestrel, consists of a t-shaped IUD **202** having an elongated body **204** fabricated of polyethylene equipped with a jacket-like polymeric reservoir **220** adjusted around the elongated body **204.** The reservoir **220** contains an active agent. The active agent includes hormones used for the treatment of menopausal troubles or for contraception, such as levonorgestrel. The IUD is sold in sterile packaging together with the insertion device with the IUD positioned within a protective tube. The t-shaped IUD **202** is positioned at the forward end (distal end) with the hormone-containing elongate member protected by a sheath or tube. The IUD arms **206a, 206b** of the transverse member, on the other hand, are expanded in order to prevent fatigue. The strings by which the t-shaped device is retracted towards the outside run between the plunger and the protective tube and end at the end of the handle.

IV. IUD Insertion Device

[00103] **FIGS. 6A-6E** illustrate an insertion device **600. FIGS. 6A-6B** are top and side views of the insertion device **600. FIG. 6C** is a cross-sectional view of a

prior version of the insertion device **600. FIG. 6D** is a cross-section of an embodiment of the insertion device **600; FIG. 6E** is a cross-section of an alternative embodiment of the insertion device **600. FIG. 6F** is an exploded view of the insertion device **600** of **FIG. 6A-B; FIG. 6G** is an exploded view of the insertion device **600** of **FIG. 6E.**

[00104] The insertion device **600** comprises an elongated sheath **632** or tube having an interior lumen configured to house the IUD prior to deployment, an elongated inner member or plunger that fits within the elongated sheath **632**, a handle **635** or housing, an elongated channel **638**, a first slider that is a sheath slider **642** having a depression with a first sheath slider surface **642A** and a second sheath slider surface **642B** opposite the first sheath slider surface **642A,** for controlling the translational movement of the elongated sheath **632** and the elongated inner member relative to one another along a corresponding longitudinal axis of the elongated channel **638**, and a second slider which is a string control slider **646,** having a first string control slider surface **646A** for controlling one or more strings attached to the IUD. The elongated channel **638** guides movement of the sheath slider **642** and the string control slider **646** in a proximal and distal direction along a longitudinal axis.

[00105] As explained in further detail below, the string control slider **646** can control the locking and unlocking of one or more strings attached to the IUD.

[00106] The handle **635** of the insertion device **600** is adaptable and configurable to provide a housing for insertion device parts such as the elongated sheath **632**, plunger, and the sheath slider **642** and the string control slider **646**, and provides a handle for the operator to hold the insertion device **600** during operation.

[00107] The handle **635** can have a marking **639,** such as a single raised line, related to a step in the insertion procedure, e.g., "1" corresponding to phase 1 of the

procedure with a corresponding marking on the sheath slider **642**. The string control slider **646** and the handle **635** can have a marking **639',** such as two raised lines, related to a step in the insertion procedure, e.g. "2." The handle **635** can have another marking **639'',** also two raised lines related to a step in the insertion procedure, e.g., "3."

[00108] The handle **635** is further adaptable and configurable to include an elongated channel **638** which allows user access to the sheath slider **642** and the string control slider **646**. As will be appreciated by those skilled in the art, movement of the sliders along the length of the elongated channel **638** can be one or more of concurrent or independent, at any given time during the procedure.

[00109] As illustrated, the sheath slider **642** is a sheath slider which is attachable to elongated sheath **632** and directly controls the longitudinal location and translational movement of the elongated sheath **632** relative to the elongated inner member and IUD as it moved within the elongated channel **638**. The string control slider **646** unlocks or releases the strings of the IUD. During an insertion procedure, the operator's thumb is used to move both the sheath slider **642** and the string control slider **646** in a proximal direction (i.e., towards the proximal end **10)** and a distal direction (i.e., towards a distal end **20)** along the elongated channel **638** to control the elongated sheath **632** and IUD strings, respectively. As will be appreciated by those skilled in the art, during routine insertion, the user would only need to move the sliders in the proximal direction. Only if there were a need to reload the IUD would the user move in the distal direction.

[00110] The sheath slider **642** and the string control slider **646** each move within the elongated channel **638** along a longitudinal axis in a proximal direction or a distal direction. At the distal end **20** of the elongated channel **638** is a cavity **645**

within the handle **635** into which at least a portion of the distal end of the sheath slider **642** can be advanced. Interior features of the handle **635** and the sheath slider **642** prevent the sheath slider **642** from advancing distally to a point where the distal surface of the finger indent **660** is flush with an edge of the first cavity **645a**.

[00111] The sheath slider **642** and the string control slider **646** have a telescopic configuration, whereby at least one slider slides within or through at least a portion of one other slider along the longitudinal axis. As shown in **FIGS. 6A-B** for example, the sheath slider **642** can slide under a portion of the string control slider **646.**

[00112] The first cavity **645a** is positioned at a first end of the elongated channel **638** and the second cavity **645B** is positioned at a second end of the elongated channel **638.** During phase 3 of the insertion procedure, the sheath slider **642** and string control slider **646** are in the full proximal position along the longitudinal axis of the elongated channel **638**, and at least partially surrounded by the second cavity **645B**.

[00113] Additional visual indication features and/or tactile features can be provided. Visual indication features can be provided on the elongated sheath **632,** the handle **635**, or both. The proximal end of the handle has a string control surface **648.** The string control surface **648** also provides a visual indicator for the user that the strings of the IUD have been released during the insertion process. As noted above, the numbers 1, 2, and 3 on the insertion device components provide a visual indication to the user the appropriate positions of the insertion device components during the multiple phases of the insertion procedure. Visual indicators, such as numbers, can be applied in any suitable fashion including, but not limited to, printing, etching, molding, carving, and the like. Moreover, visual indicators can be positioned

such that they are visible only during certain aspects of the procedure, and not visible during other aspects of the procedure. Additionally, the visual indicators can be both visible and tactile.

[00114] As shown in **FIG. 6C**, an interior of a prior version of the insertion device **600** included detent ribs **641, 641'** of the string control slider **646** that flexed within the plane of the ultrasonic weld of the handle halves. The detent ribs **641, 641'** within the plane of the ultrasonic weld of the handle **635** halves led to detent force variability.

[00115] As shown in **FIG. 6D**, the distally positioned sheath slider detent arms **672, 673** have been reconfigured so that the distally positioned sheath slider detent arms **672, 673** flex 90 degrees relative to the ultrasonic weld plane of the handle halves. In one configuration, the sheath slider **642** has distally positioned sheath slider detent arms **672, 673** on either side of both the top and bottom halves of the sheath slider **642,** as shown in more detail in **FIG. 7A.**

[00116] **FIG. 6E**, is an alternative configuration, where each half of the sheath slider **642** has one detent arm. When the two halves of the sheath slider **642** are mated, a detent arm is positioned on each side of the sheath slider **642,** as shown in more detail in **FIG. 7B.** The distally positioned sheath slider detent arms **672, 673** are positioned on either side of the sheath slider **642** when the two pieces of the sheath slider are assembly. The distally positioned sheath slider detent arms **672, 673** can be positioned on both sides of each half of the sheath slider **642**, on both sides of one half of the sheath slider **642**, or on opposing sides of each half of the sheath slider **642**.

[00117] **FIG. 6F** is an exploded view of the insertion device **600** of **FIG. 6D**. **FIG. 6G** is an exploded view of the insertion device **600** of **FIG. 6E.** The insertion device **600** includes a handle **635**, shown in two pieces. The handle has an elongated

channel **638** or guide and a distal cavity or first cavity **645A** and a proximal cavity or second cavity **645B** which faces the first cavity **645A** at an opposite side of the elongated channel **638.** A sheath slider **642** is positioned distally relative to a string control slider **646.** An elongated sheath **632,** a plunger **634** and a flange **633** is provided.

[00118] **FIG. 7A** illustrates additional detail of the sheath slider **642** shown in **FIG 6E.** The top half of the sheath slider **642** has a pair of lateral rails **670, 670'** on either side of the sheath slider **642**. The lateral rails **670, 670'** fit within a channel on either side of the housing (shown in **FIG. 9)**. A pair of distally positioned sheath slider detent arms **672, 673** are provided distal to the lateral rails **670.** The distally positioned sheath slider detent arm 672s **672, 673** are lateral flexing detent arms.

[00119] **FIG. 7B** illustrates additional detail of the sheath slider **642** shown in **FIG 6E.** The top half of the sheath slider **642** has a pair of lateral rails **670, 670'** on either side of the sheath slider **642**. The pair of lateral rails **670, 670'** fit within a channel in the housing (shown in **FIG. 9)**. A distally positioned sheath slider detent arm **673** is provided distal to the lateral rails **670.** The distally positioned sheath slider detent arm **673** is a lateral flexing detent arm. In one configuration, the bottom half of the sheath slider **642** could have a distally positioned sheath slider detent arm on a side opposite the distally positioned sheath slider detent arm **673** so that when the top and bottom of the sheath slider **642** are mated, a sheath slider detent arms extend from either side of the sheath slider **642.**

[00120] **FIG. 7C** illustrates the sheath slider **642** shown in **FIG. 7A** positioned within a portion of the housing for the handle **635**. A pair of lateral ribs **674, 675** which extend from an interior surface of the housing of the handle **635** engage the distally positioned sheath slider detent arms **672, 673.** The sheath slider **642** engages

the elongated sheath **632** at a distal end **20,** and a string control slider **646** at a proximal end **10.** The sheath slider **642** has a visual indicator, such as a "1" on a concave upper surface. The concave upper surface is designed to fit a finger of a user during one-handed use of the IUD insertion device.

[00121] **FIG. 7D** illustrates the sheath slider **642** shown in **FIG. 7B** positioned within a portion of the housing of the handle **635**. A lateral rib **675** extends from an interior surface of bottom half of the housing of the handle **635** to engage a proximal surface of the lateral rib **675.** The sheath slider **642** engages the elongated sheath **632** at a distal end **20**. and a string control slider **646** at a proximal end **10.**

[00122] **FIG. 8** illustrates the sheath slider **642** positioned partially within a cavity formed in the string control slider **646** with a first sheath hard stop surface **690** on an interior surface of the string control slider **646.** The first sheath hard stop surface **690** prevents the sheath slider **642** from moving proximally past the string control slider **646** during use.

[00123] **FIG. 9** illustrates another view of the sheath slider **642** positioned partially nested within a cavity formed in the string control slider **646** with a first sheath hard stop surface **690** on an interior surface of the string control slider **646.** The channel **686** that the one of the lateral rails **670** fits within can be appreciated from this view.

[00124] **FIG. 10** illustrates a distal end **20** of the insertion device **600** of **FIG. 6A**. The t-shaped IUD **202** is positioned in the distal end **20** of the elongated sheath **632**. The plunger **634** engages the proximal end **10** of the t-shaped IUD **202** without the use of any additional tube segment.

[00125] **FIG. 11** illustrates an interior view of a distal portion of the handle **635** adjacent the elongated sheath **632** shown in **FIG. 6C**. An elongated sheath hard stop

surface **692** is provided which eliminates the need to provide an inner sleeve inside the elongated sheath **632** to prevent further movement of the elongated sheath **632**.

[00126] **FIGS. 12A-12C** illustrate elements of the insertion device **600** during various steps of the insertion process. **FIG. 12A** illustrates an interior of the insertion device in position 1 at the beginning of the insertion procedure (phase 1) when the sheath slider **642** of **FIG. 6A** is in a distal position. As shown in the cut-away, the distally positioned sheath slider detent arms **672, 673** engage the lateral ribs **674, 675** on the bottom half of the handle **635.**

[00127] **FIG. 12B** illustrates position 1 of an alternate embodiment at the beginning of the insertion procedure (phase 1) when the sheath slider **642** is in a distal position. As shown in the cut-away, one of the distally positioned sheath slider detent arms **672** is positioned on the lower portion of the sheath slider **642** and would engage a lateral rib positioned within the upper half of the handle (not shown). A lateral rib **675** is shown on the opposing side of the bottom half of the handle **635,** which would engage a lateral rib positioned within the upper portion of the sheath slider.

[00128] **FIG. 12C** illustrates an interior of the insertion device in position 2 midway during the procedure (phase 2). Interiorly engaging string control slider detent arms **680, 681** are positioned proximal to the distally positioned sheath slider detent arms **672, 673**. The interiorly engaging string control slider detent arms **680, 681** engage a pair of ribs **684, 685** which engage the plunger **634** on one side and the interiorly engage string control slider detent arms **680, 681** on the other side. The interiorly engaging string control slider detent arms **680, 681** of position 2 (phase 2) provide the user tactile feedback that they have reached the second position. When this feedback occurs, the user then waits 15 seconds for the IUD arms to come down.

Then the user moves the sheath slider **642** together with the string control slider **646** out of position 2 and proximally into position 3.

[00129] **FIG. 12D** a proximal end **10** of the interior of the handle **635** during position 3 showing the proximal end of the string control slider **646**. A pair of outwardly facing string control slider detent arms **682, 683**. The outwardly facing string control slider detent arms **682, 683** at position 3 again provide the user tactile feedback and an audible click to let the user know that position 3 has been reached. **FIG. 12D** illustrates the string control slider at position 3 with the outwardly facing string control slider detent arms **682, 683** engaging the proximal handle ribs **687, 688**. Additional locating features **693, 694** shown in **FIG. 12E** are provided which assist in achieving proper alignment and quick positioning of the two handles prior to ultrasonic welding. The locating features are illustrated as an "O" and a "+" to distinguish a first locating feature on a first side of the handle **635** and a second locating feature on a second side of the handle **635** opposite the first side of the handle.

[00130] Turning to **FIGS. 13A-C**, the bottom half of the sheath slider **642** illustrating an interior surface has a plurality of internal curved ribs **695** (illustrated as three ribs) with a pair of tensile holders **696, 696'** on an upper surface of one or more of the internal curved ribs **695.** The pair of tensile holders **696, 696'** provide additional tensile holding strength for the sheath slider **642** during use. Thus, in **FIG. 13A**, there are three internal curved ribs **695** wherein each of the three internal curved ribs each have two tensile holders, for a total of six tensile holders. **FIG. 13B** illustrates the use of alternating the tensile holders **696** and torsional holder **697** at a 90 degree angle from the tensile holder which provides additional torsional strength during use. Thus, in **FIG. 13B**, there are also three internal curved ribs **695.** In this

configuration, two of the internal curved ribs have two tensile holders, for a total of four tensile holders, and the third rib (the center rib) has a torsional holder **697.**

[00131] The bottom half of the sheath slider **642** in **FIG. 13A** has a pair of distally positioned sheath slider detent arms **672, 673.** The configuration illustrated in **FIG. 13B** shows the bottom portion of the sheath slider **642** with only one of the distally positioned sheath slider detent arms **672**. As will be appreciated by those skilled in the art, the configuration of **FIG. 13A** having two of the distally positioned sheath slider detent arms **672, 673** can have a single detent arm and/or can have tensile holders **696** on one or more of the internal curved ribs **695** or can have a combination of tensile holders **696** and torsional holder **697.** Similarly, the configuration shown in **FIG. 13B** can have two detent arms. **FIG. 13C** illustrates a bottom portion and interior surface of a sheath slider **642** with a torsional holder **697** at a front curved surface.

[00132] **FIG. 14** illustrates a cut away of the housing forming the handle **635**. A tongue and groove interface **698** is provided to improve the weld strength of the handle. Additionally rails **699** can be provided to increase rigidity of the handle **635.**

[00133] **FIG. 15** illustrates the proximal end **10** of the handle **635** and the string control surface **648** which has a radiused edge instead of a sharp edge. Use of a radiused edge helps prevent the strings from being damaged or cut by the device during the insertion process.

[00134] **FIG. 16** illustrates the string control slider **646** which is a single molded part. The string control slider **646** has a proximal end **10** and a distal end **20**. An interiorly facing channel **686** is formed along a portion of the length at the distal end in which the lateral rails of the sheath slider moves. The string control slider **646** has two pairs of detents. A first pair of interiorly engaging string control slider detent

arms **680, 681** is positioned proximally relative to a pair of outwardly facing string control slider detent arms **682, 683.** A pair of flexible arms **649** are positioned about the proximal end **10** of the string control slider **646** and positioned in a plane that is perpendicular to the plane in which the interiorly engaging string control slider detent arms **680, 681** and outwardly facing string control slider detent arms **682, 683** are positioned.

[00135] **FIGS. 17A-C** illustrate the proximal and distal end of the insertion device at phase 1 of the insertion process (**FIG. 17A**), phase 2 of the insertion process (**FIG. 17B**) and phase 3 of the insertion process (**FIG. 17C**). At each phase of the process, tactile feedback can be provided to the user when the interior components described and shown above are engaged.

[00136] In **FIG. 17A,** during phase 1, the t-shaped IUD **202** is loaded into the elongated sheath by pulling on the IUD strings **210** and is shown positioned within the interior of the elongated sheath **632** when the sheath slider **642** is positioned at a distal most position within the elongated channel in the handle **635.** The distal surface of the sheath slider **642** aligns with the edge of the first cavity **645a.** Additionally, the style of the marking **639** on the exterior surface of the handle **635** can align with a marking on the surface of the sheath slider **642** (shown as a single raised rib).

[00137] During phase 2, shown in **FIG. 17B**, the sheath slider **642** is moved proximally (towards the user) and slides under a portion of the string control slider **646** at which point, the plunger positioned within the elongated sheath **632** pushes the t-shaped IUD partially out of the distal end of the elongated sheath **632**. The user will feel a click when the distally positioned sheath slider detent arms **672, 673** shown in **FIG. 6D** move past the lateral ribs **674, 675.**-The IUD arms extend laterally away from a central axis, while the elongated body remains within the interior of the

elongated sheath **632.** During this phase the marking **639** on the handle **635** can align with markings on the string control slider **646** (shown as two adjacent raised ribs). When the sheath slider **642** is positioned optimally with respect to the string control slider **646**, the proximal surface of the sheath slider **642** aligns with a surface of the string control slider **646a**. Additionally, the interiorly engaging string control slider detent arms **680, 681** engage a pair of ribs **684, 685** which engage the plunger **634** on one side and the interiorly engage string control slider detent arms **680, 681** on the other side.

[00138] As shown in **FIG. 17C,** during phase 3, the sheath slider **642** and string control slider **646** are drawn further back in the channel at which point the entire t-shaped IUD is released from the distal end of the elongated sheath **632.** The user will feel a click when the sheath slider **642** and string control slider **646** are moved together and an additional click when reaching the full proximal position. The sheath slider **642** and string control slider **646** are in the full proximal position along the longitudinal axis of the elongated channel **638**, and at least partially surrounded by the second cavity **645B**.

[00139] While preferred embodiments of the present invention have been shown and described herein, it will be obvious to those skilled in the art that such embodiments are provided by way of example only. Numerous variations, changes, and substitutions will now occur to those skilled in the art without departing from the invention. It should be understood that various alternatives to the embodiments of the invention described herein may be employed in practicing the invention. It is intended that the following claims define the scope of the invention and that methods and structures within the scope of these claims and their equivalents be covered thereby.

CLAIMS

WHAT IS CLAIMED IS:

1. An insertion device for inserting an IUD comprising:

an elongated sheath having a proximal end and a distal end, a lumen extending between the proximal end and the distal end wherein the elongated sheath defines an axis for operation of the insertion device and wherein the IUD is positionable within the elongated sheath;

an elongated inner member having a proximal end and a distal end disposable within the lumen of the elongated sheath wherein a proximal end of the IUD is positionable adjacent the distal end of the elongated inner member; and

a proximally positioned user interface, wherein the proximally positioned user interface further comprises

an elongated channel,

a moveable sheath slider moveable within the elongated channel wherein the moveable sheath slider has an upper surface, a lower surface and two side surfaces, further wherein the moveable sheath slider has a depression on an upper surface of the moveable sheath slider facing an exterior of the user interface, a rail along a side of the moveable sheath slider and a lateral detent arm, and

a string control slider having a curved distal surface for abutting with the curved surface of the moveable sheath slider when the sheath slider is adjacent the string control slider wherein the string control slider further comprises a hard stop and one or more string control slider detent arms in an interior of the user interface and a rib.

2. A method of inserting an IUD into a uterus with an insertion device comprising the steps of:

providing the insertion device wherein the insertion device comprises an elongated sheath having a proximal end and a distal end, a lumen extending between the proximal end and the distal end wherein the elongated sheath defines an axis for operation of the insertion device and wherein the IUD is positionable within the elongated sheath;

an elongated inner member having a proximal end and a distal end disposable within the lumen of the elongated sheath wherein a proximal end of the IUD is positionable adjacent the distal end of the elongated inner member; and

a proximally positioned user interface, wherein the proximally positioned user interface further comprises

an elongated channel,

a moveable sheath slider moveable within the elongated channel wherein the moveable sheath slider has an upper surface, a lower surface and two side surfaces, further wherein the moveable sheath slider has a depression on an upper surface of the moveable sheath slider facing an exterior of the user interface, a rail along a side of the moveable sheath slider and a lateral detent arm, and

a string control slider having a curved distal surface for abutting with the curved surface of the moveable sheath slider when the sheath slider is adjacent the string control slider wherein the string control slider further

comprises a hard stop and one or more string control slider detent arms in an interior of the user interface and a rib;

advancing the insertion device and the IUD into the uterus;

actuating the sheath slider of the insertion device;

at least one of moving the elongated sheath proximally and advancing the IUD distally;

automatically or semi-automatically increasing a radial diameter of the IUD; and

releasing the IUD from the insertion device.

3. A method of hormonally treating a patient comprising the steps of:

providing an IUD which delivers an active agent;

inserting the IUD with the active agent into a uterus of a patient with an insertion device wherein the insertion device comprises an elongated sheath having a proximal end and a distal end, a lumen extending between the proximal end and the distal end wherein the elongated sheath defines an axis for operation of the insertion device and wherein the IUD is positionable within the elongated sheath;

an elongated inner member having a proximal end and a distal end disposable within the lumen of the elongated sheath wherein a proximal end of the IUD is positionable adjacent the distal end of the elongated inner member;

a proximally positioned user interface, wherein the proximally positioned user interface further comprises

an elongated channel,

a moveable sheath slider moveable within the elongated channel wherein the moveable sheath slider has an upper surface, a lower surface and two side surfaces, further wherein the moveable sheath slider has a depression on an upper surface of the moveable sheath slider facing an exterior of the user interface, a rail along a side of the moveable sheath slider and a lateral detent arm, and

a string control slider having a curved distal surface for abutting with the curved surface of the moveable sheath slider when the sheath slider is adjacent the string control slider wherein the string control slider further comprises a hard stop and one or more string control slider detent arms in an interior of the user interface and a rib;

advancing the insertion device and the IUD with the active agent into the uterus;

actuating the sheath slider of the insertion device;

at least one of moving the elongated sheath proximally and advancing the IUD with the active agent distally;

releasing the IUD with the active agent from the insertion device; and

delivering the active agent from the IUD to the patient.

4. An insertion device for inserting an IUD comprising:

an elongated sheath having a proximal end and a distal end, a lumen extending between the proximal end and the distal end wherein the elongated sheath defines an axis for operation of the insertion device and wherein the IUD is positionable within the elongated sheath;

an elongated inner member having a proximal end and a distal end disposable within the lumen of the elongated sheath wherein a proximal end of the IUD is positionable adjacent the distal end of the elongated inner member; and

a proximally positioned user interface, wherein the proximally positioned user interface further comprises

an elongated channel,

a moveable sheath slider moveable within the elongated channel wherein the moveable sheath slider has an upper surface, a lower surface and two side surfaces, further wherein the moveable sheath slider has a depression on an upper surface of the moveable sheath slider facing an exterior of the user interface, a rail along a side of the moveable sheath slider and a lateral detent arm, and

a string control slider having a curved distal surface for abutting with the curved surface of the moveable sheath slider when the sheath slider is adjacent the string control slider.

5. The insertion device of claim **4**, wherein the proximally positioned user interface and the sheath slider further comprises one or more alignment surfaces, wherein the one or more alignment surfaces of the user interface is adapted and configured to mechanically complement the one or more alignment surfaces of the sheath.

6. The insertion device of claim **4,** wherein a first sheath slider alignment surface aligns with a first user interface alignment surface at a first position along a length of the elongated channel.

7. The insertion device of claim **4**, wherein the elongated channel further comprises one or more cavities on one or more of a proximal end of the elongated channel and a distal end of the elongated channel wherein the one or more cavities are adapted and configured to house at least a portion of the movable sheath slider.

8. The insertion device of claim **4**, wherein the string control slider is adaptable and configurable to securely move within the elongated channel.

9. The insertion device of claim **4**, wherein the moveable sheath slider and the string control slider are adapted and configured to operate at least one of simultaneously and independently within the elongated channel.

10. The insertion device of claim **4**, wherein the string slider partially surrounds and the sheath slider.

11. The insertion device of claim **4**, wherein the insertion device is configurable to receive the IUD within a distal end of the lumen of the elongated sheath and wherein the insertion device further comprises at least

one string locking feature adaptable and configurable to secure one or more string components of the IUD.

12. The insertion device of claim **4**, wherein the distal end of the elongated sheath has an atraumatic tip selected from the group comprising a rounded tip and a tapered tip.

13. The insertion device of claim **4**, wherein the moveable sheath slider further comprises a second rail along a second side of the moveable sheath slider and a second lateral detent arm.

14. The insertion device of claim **4**, wherein the moveable sheath slider further comprises a top half and a bottom half.

15. The insertion device of claim **4**, wherein the string control slider further comprises an interiorly positioned hard stop.

16. The insertion device of claim **4**, the user interface further comprises one or more string control slider detent arm in an interior of the user interface and a rib.

17. The insertion device of claim **16**, wherein the one or more string control slider detent arms flex inwardly or flex outwardly.

18. A method of inserting an IUD into a uterus with an insertion device comprising the steps of:

providing the insertion device wherein the insertion device comprises an elongated sheath having a proximal end and a distal end, a lumen extending between the proximal end and the distal end wherein the elongated sheath defines an axis for operation of the insertion device and wherein the IUD is positionable within the elongated sheath, an elongated inner member having a proximal end and a distal end disposable within the lumen of the elongated sheath wherein a proximal end of the IUD is positionable adjacent the distal end of the elongated inner member, a proximally positioned user interface, wherein the proximally positioned user interface further comprises an elongated channel, a moveable sheath slider moveable within the elongated channel wherein the moveable sheath slider has an upper surface, a lower surface and two side surfaces, further wherein the moveable sheath slider has a depression on an upper surface of the moveable sheath slider facing an exterior of the user interface, a rail along a side of the moveable sheath slider and a lateral detent arm, and a string control slider having a curved distal surface for abutting with the curved surface of the moveable sheath slider when the sheath slider is adjacent the string control slider;

advancing the insertion device and the IUD into the uterus;

actuating the sheath slider of the insertion device;

at least one of moving the elongated sheath proximally and advancing the IUD distally;

automatically or semi-automatically increasing a radial diameter of the IUD; and

releasing the IUD from the insertion device.

19. The method of inserting the IUD into the uterus of claim **18**, further comprising the step of moving the string control slider within the elongated channel.

20. The method of inserting the IUD into the uterus of claim **18**, further comprising the step of moving the moveable sheath slider and the string control slider of the insertion device simultaneously within the elongated channel.

21. The method of inserting the IUD into the uterus of claim **18**, further comprising the step of moving the moveable sheath slider and the string control slider of the insertion device independently within the elongated channel.

22. The method of inserting the IUD into the uterus of claim **18**, further comprising the step of moving the sheath slider and the string control slider of the insertion device telescopically along at least a first portion of the elongated channel.

23. The method of inserting the IUD into the uterus of claim **18,** wherein the IUD delivers an active agent.

24. The method of inserting the IUD into the uterus of claim **23,** wherein the active agent is a hormone used for the treatment of menopausal troubles or for contraception.

25. A method of hormonally treating a patient comprising the steps of:

providing an IUD which delivers an active agent;

inserting the IUD with the active agent into a uterus of a patient with an insertion device wherein the insertion device comprises an elongated sheath having a proximal end and a distal end, a lumen extending between the proximal end and the distal end wherein the elongated sheath defines an axis for operation of the insertion device and wherein the IUD is positionable within the elongated sheath, an elongated inner member having a proximal end and a distal end disposable within the lumen of the elongated sheath wherein a proximal end of the IUD is positionable adjacent the distal end of the elongated inner member, a proximally positioned user interface, wherein the proximally positioned user interface further comprises an elongated channel, a moveable sheath slider moveable within the elongated channel wherein the moveable sheath slider has an upper surface, a lower surface and two side surfaces, further wherein the moveable sheath slider has a depression on an upper surface of the moveable sheath slider facing an exterior of the user interface, a rail along a side of the moveable sheath slider and a lateral detent arm, and a string control slider having a curved distal surface for abutting with the curved surface of the moveable sheath slider when the sheath slider is adjacent the string control slider;

advancing the insertion device and the IUD with the active agent into the uterus;

actuating the sheath slider of the insertion device;

at least one of moving the elongated sheath proximally and advancing the IUD with the active agent distally;

releasing the IUD with the active agent from the insertion device; and

delivering the active agent from the IUD to the patient.

26. The method of claim **25,** wherein the active agent is a hormone used for the treatment of menopausal troubles or for contraception.

27. An insertion device for inserting an IUD comprising:

an elongated sheath having a proximal end and a distal end, a lumen extending between the proximal end and the distal end wherein the elongated sheath defines an axis for operation of the insertion device and wherein the IUD is positionable within the elongated sheath;

an elongated inner member having a proximal end and a distal end disposable within the lumen of the elongated sheath wherein a proximal end of the IUD is positionable adjacent the distal end of the elongated inner member; and

a proximally positioned user interface, wherein the proximally positioned user interface further comprises

an elongated channel,

a moveable sheath slider moveable within the elongated channel wherein the moveable sheath slider has an upper surface, a lower surface and two side surfaces, further wherein the moveable

sheath slider has a depression on an upper surface of the moveable sheath slider facing an exterior of the user interface, and

a string control slider having a curved distal surface for abutting with the curved surface of the moveable sheath slider when the sheath slider is adjacent the string control slider wherein the string control slider further comprises an interiorly positioned hard stop.

28. The insertion device of claim **27**, wherein the proximally positioned user interface and the sheath slider further comprises one or more alignment surfaces, wherein the one or more alignment surfaces of the user interface is adapted and configured to mechanically complement the one or more alignment surfaces of the sheath.

29. The insertion device of claim **27,** wherein a first sheath slider alignment surface aligns with a first user interface alignment surface at a first position along a length of the elongated channel.

30. The insertion device of claim **27**, wherein the elongated channel further comprises one or more cavities on one or more of a proximal end of the elongated channel and a distal end of the elongated channel wherein the one or more cavities are adapted and configured to house at least a portion of the movable sheath slider.

31. The insertion device of claim **27**, wherein the string control slider is adaptable and configurable to securely move within the elongated channel.

32. The insertion device of claim **27**, wherein the moveable sheath slider and the string control slider are adapted and configured to operate at least one of simultaneously and independently within the elongated channel.

33. The insertion device of claim **27**, wherein the string slider partially surrounds and the sheath slider.

34. The insertion device of claim **27**, wherein the insertion device is configurable to receive the IUD within a distal end of the lumen of the elongated sheath and wherein the insertion device further comprises at least one string locking feature adaptable and configurable to secure one or more string components of the IUD.

35. The insertion device of claim **27**, wherein the distal end of the elongated sheath has an atraumatic tip selected from the group comprising a rounded tip and a tapered tip.

36. The insertion device of claim **27**, wherein the moveable sheath slider further comprises a rail along a side of the moveable sheath slider and a lateral detent arm.

37. The insertion device of claim **36**, wherein the moveable sheath slider further comprises a second rail along a second side of the moveable sheath slider and a second lateral detent arm.

38. The insertion device of claim **27**, wherein the moveable sheath slider further comprises a top half and a bottom half.

39. The insertion device of claim **27**, the user interface further comprises one or more string control slider detent arm in an interior of the user interface and a rib.

40. The insertion device of claim **39**, wherein the one or more string control slider detent arms flex inwardly or flex outwardly.

41. A method of inserting an IUD into a uterus with an insertion device comprising the steps of:

providing the insertion device wherein the insertion device comprises an elongated sheath having a proximal end and a distal end, a lumen extending between the proximal end and the distal end wherein the elongated sheath defines an axis for operation of the insertion device and wherein the IUD is positionable within the elongated sheath;

an elongated inner member having a proximal end and a distal end disposable within the lumen of the elongated sheath wherein a proximal end of the IUD is positionable adjacent the distal end of the elongated inner member; and

a proximally positioned user interface, wherein the proximally positioned user interface further comprises

an elongated channel,

a moveable sheath slider moveable within the elongated channel wherein the moveable sheath slider has an upper surface, a lower surface and two side surfaces, further wherein the moveable sheath slider has a depression on an upper surface of the moveable sheath slider facing an exterior of the user interface, and

a string control slider having a curved distal surface for abutting with the curved surface of the moveable sheath slider when the sheath slider is adjacent the string control slider wherein the string control slider further comprises an interiorly positioned hard stop;

advancing the insertion device and the IUD into the uterus;

actuating the sheath slider of the insertion device;

at least one of moving the elongated sheath proximally and advancing the IUD distally;

automatically or semi-automatically increasing a radial diameter of the IUD; and

releasing the IUD from the insertion device.

42. The method of inserting the IUD into the uterus of claim **41**, further comprising the step of moving the string control slider within the elongated channel.

43. The method of inserting the IUD into the uterus of claim **41**, further comprising the step of moving the moveable sheath slider and the string control slider of the insertion device simultaneously within the elongated channel.

44. The method of inserting the IUD into the uterus of claim **41**, further comprising the step of moving the moveable sheath slider and the string control slider of the insertion device independently within the elongated channel.

45. The method of inserting the IUD into the uterus of claim **41**, further comprising the step of moving the sheath slider and the string control slider of the insertion device telescopically along at least a first portion of the elongated channel.

46. The method of inserting the IUD into the uterus of claim **41,** wherein the IUD delivers an active agent.

47. The method of inserting the IUD into the uterus of claim **46,** wherein the active agent is a hormone used for the treatment of menopausal troubles or for contraception.

48. A method of hormonally treating a patient comprising the steps of:

providing an IUD which delivers an active agent;

inserting the IUD with the active agent into a uterus of a patient with an insertion device wherein the insertion device comprises an elongated sheath having a proximal end and a distal end, a lumen extending between the proximal end and the distal end wherein the elongated sheath defines an axis for operation of the insertion device and wherein the IUD is positionable within the elongated sheath;

an elongated inner member having a proximal end and a distal end disposable within the lumen of the elongated sheath wherein a proximal end of the IUD is positionable adjacent the distal end of the elongated inner member;

a proximally positioned user interface, wherein the proximally positioned user interface further comprises

an elongated channel,

a moveable sheath slider moveable within the elongated channel wherein the moveable sheath slider has an upper surface, a lower surface and two side surfaces, further wherein the moveable sheath slider has a depression on an upper surface of the moveable sheath slider facing an exterior of the user interface, and

a string control slider having a curved distal surface for abutting with the curved surface of the moveable sheath slider when the sheath slider is adjacent the string control slider wherein the string control slider further comprises an interiorly positioned hard stop;

advancing the insertion device and the IUD with the active agent into the uterus;

actuating the sheath slider of the insertion device;

at least one of moving the elongated sheath proximally and advancing the IUD with the active agent distally;

releasing the IUD with the active agent from the insertion device; and

delivering the active agent from the IUD to the patient.

49. The method of claim **48,** wherein the active agent is a hormone used for the treatment of menopausal troubles or for contraception.

50. An insertion device for inserting an IUD comprising:

an elongated sheath having a proximal end and a distal end, a lumen extending between the proximal end and the distal end wherein the elongated sheath defines an axis for operation of the insertion device and wherein the IUD is positionable within the elongated sheath;

an elongated inner member having a proximal end and a distal end disposable within the lumen of the elongated sheath wherein a proximal end of the IUD is positionable adjacent the distal end of the elongated inner member; and

a proximally positioned user interface, wherein the proximally positioned user interface further comprises

an elongated channel,

a moveable sheath slider moveable within the elongated channel wherein the moveable sheath slider has an upper surface, a lower surface and two side surfaces, further wherein the moveable sheath slider has a depression on an upper surface of the moveable sheath slider facing an exterior of the user interface, and

a string control slider having a curved distal surface for abutting with the curved surface of the moveable sheath slider when the sheath slider is adjacent the string control slider wherein the string control slider further comprises one or more string control slider detent arms in an interior of the user interface and a rib.

51. The insertion device of claim **50**, wherein the proximally positioned user interface and the sheath slider further comprises one or more alignment surfaces, wherein the one or more alignment surfaces of the user interface is adapted and configured to mechanically complement the one or more alignment surfaces of the sheath.

52. The insertion device of claim **50,** wherein a first sheath slider alignment surface aligns with a first user interface alignment surface at a first position along a length of the elongated channel.

53. The insertion device of claim **50**, wherein the elongated channel further comprises one or more cavities on one or more of a proximal end of the elongated channel and a distal end of the elongated channel wherein the one or more cavities are adapted and configured to house at least a portion of the movable sheath slider.

54. The insertion device of claim **50**, wherein the string control slider is adaptable and configurable to securely move within the elongated channel.

55. The insertion device of claim **50**, wherein the moveable sheath slider and the string control slider are adapted and configured to operate at least one of simultaneously and independently within the elongated channel.

56. The insertion device of claim **50**, wherein the string slider partially surrounds and the sheath slider.

57. The insertion device of claim **50**, wherein the insertion device is configurable to receive the IUD within a distal end of the lumen of the elongated sheath and wherein the insertion device further comprises at least one string locking feature adaptable and configurable to secure one or more string components of the IUD.

58. The insertion device of claim **50**, wherein the distal end of the elongated sheath has an atraumatic tip selected from the group comprising a rounded tip and a tapered tip.

59. The insertion device of claim **50**, wherein the moveable sheath slider further comprises a second rail along a second side of the moveable sheath slider and a second lateral detent arm.

60. The insertion device of claim **50**, wherein the moveable sheath slider further comprises a top half and a bottom half.

61. The insertion device of claim **50**, wherein the moveable sheath slider further comprises a rail along a side of the moveable sheath slider and a lateral detent arm.

62. The insertion device of claim **50**, the user interface further comprises one a hard stop.

63. The insertion device of claim **62**, wherein the one or more string control slider detent arms flex inwardly or flex outwardly.

64. A method of inserting an IUD into a uterus with an insertion device comprising the steps of:

providing the insertion device wherein the insertion device comprises an elongated sheath having a proximal end and a distal end, a lumen extending between the proximal end and the distal end wherein the elongated sheath defines an axis for operation of the insertion device and wherein the IUD is positionable within the elongated sheath;

an elongated inner member having a proximal end and a distal end disposable within the lumen of the elongated sheath wherein a proximal end of the IUD is positionable adjacent the distal end of the elongated inner member; and

a proximally positioned user interface, wherein the proximally positioned user interface further comprises

an elongated channel,

a moveable sheath slider moveable within the elongated channel wherein the moveable sheath slider has an upper surface, a lower surface and two side surfaces, further wherein the moveable sheath slider has a depression on an upper surface of the moveable sheath slider facing an exterior of the user interface, and

a string control slider having a curved distal surface for abutting with the curved surface of the moveable sheath slider when the sheath slider is adjacent the string control slider wherein the string control slider further comprises one or more string control slider detent arms in an interior of the user interface and a rib;

advancing the insertion device and the IUD into the uterus;

actuating the sheath slider of the insertion device;

at least one of moving the elongated sheath proximally and advancing the IUD distally;

automatically or semi-automatically increasing a radial diameter of the IUD; and

releasing the IUD from the insertion device.

65. The method of inserting the IUD into the uterus of claim **64**, further comprising the step of moving the string control slider within the elongated channel.

66. The method of inserting the IUD into the uterus of claim **64**, further comprising the step of moving the moveable sheath slider and the

string control slider of the insertion device simultaneously within the elongated channel.

67. The method of inserting the IUD into the uterus of claim **64**, further comprising the step of moving the moveable sheath slider and the string control slider of the insertion device independently within the elongated channel.

68. The method of inserting the IUD into the uterus of claim **64**, further comprising the step of moving the sheath slider and the string control slider of the insertion device telescopically along at least a first portion of the elongated channel.

69. The method of inserting the IUD into the uterus of claim **64,** wherein the IUD delivers an active agent.

70. The method of inserting the IUD into the uterus of claim **69,** wherein the active agent is a hormone used for the treatment of menopausal troubles or for contraception.

71. A method of hormonally treating a patient comprising the steps of:

providing an IUD which delivers an active agent;

inserting the IUD with the active agent into a uterus of a patient with an insertion device wherein the insertion device comprises an elongated sheath

having a proximal end and a distal end, a lumen extending between the proximal end and the distal end wherein the elongated sheath defines an axis for operation of the insertion device and wherein the IUD is positionable within the elongated sheath;

an elongated inner member having a proximal end and a distal end disposable within the lumen of the elongated sheath wherein a proximal end of the IUD is positionable adjacent the distal end of the elongated inner member;

a proximally positioned user interface, wherein the proximally positioned user interface further comprises

an elongated channel,

a moveable sheath slider moveable within the elongated channel wherein the moveable sheath slider has an upper surface, a lower surface and two side surfaces, further wherein the moveable sheath slider has a depression on an upper surface of the moveable sheath slider facing an exterior of the user interface, and

a string control slider having a curved distal surface for abutting with the curved surface of the moveable sheath slider when the sheath slider is adjacent the string control slider wherein the string control slider further comprises one or more string control slider detent arms in an interior of the user interface and a rib;

advancing the insertion device and the IUD with the active agent into the uterus;

actuating the sheath slider of the insertion device;

at least one of moving the elongated sheath proximally and advancing the IUD with the active agent distally;

releasing the IUD with the active agent from the insertion device; and

delivering the active agent from the IUD to the patient.

72. The method of claim **71,** wherein the active agent is a hormone used for the treatment of menopausal troubles or for contraception.

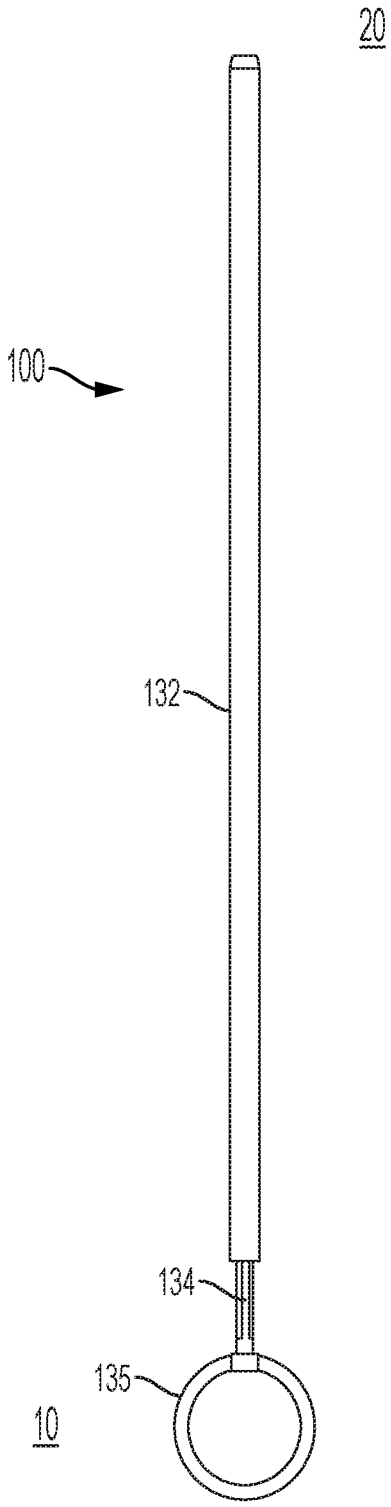

FIG. 1A
PRIOR ART

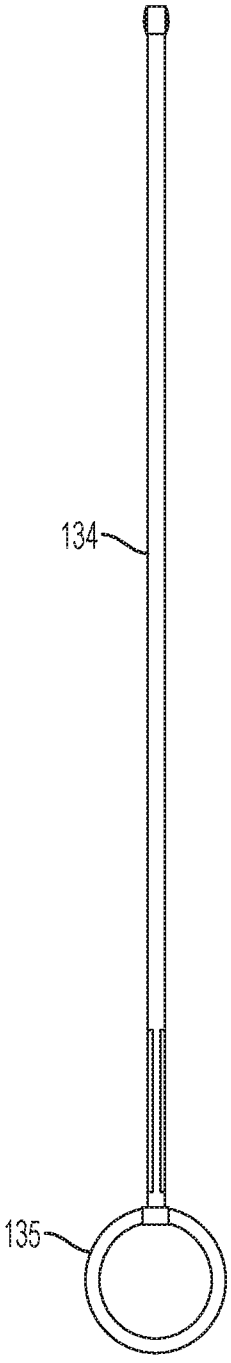

FIG. 1B
PRIOR ART

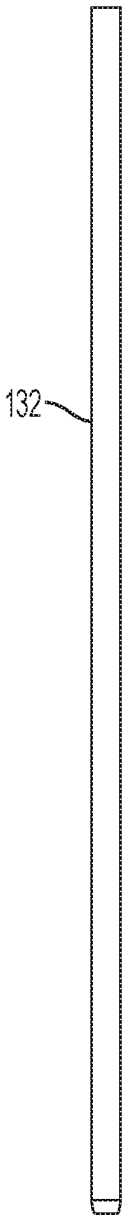

FIG. 1C
PRIOR ART

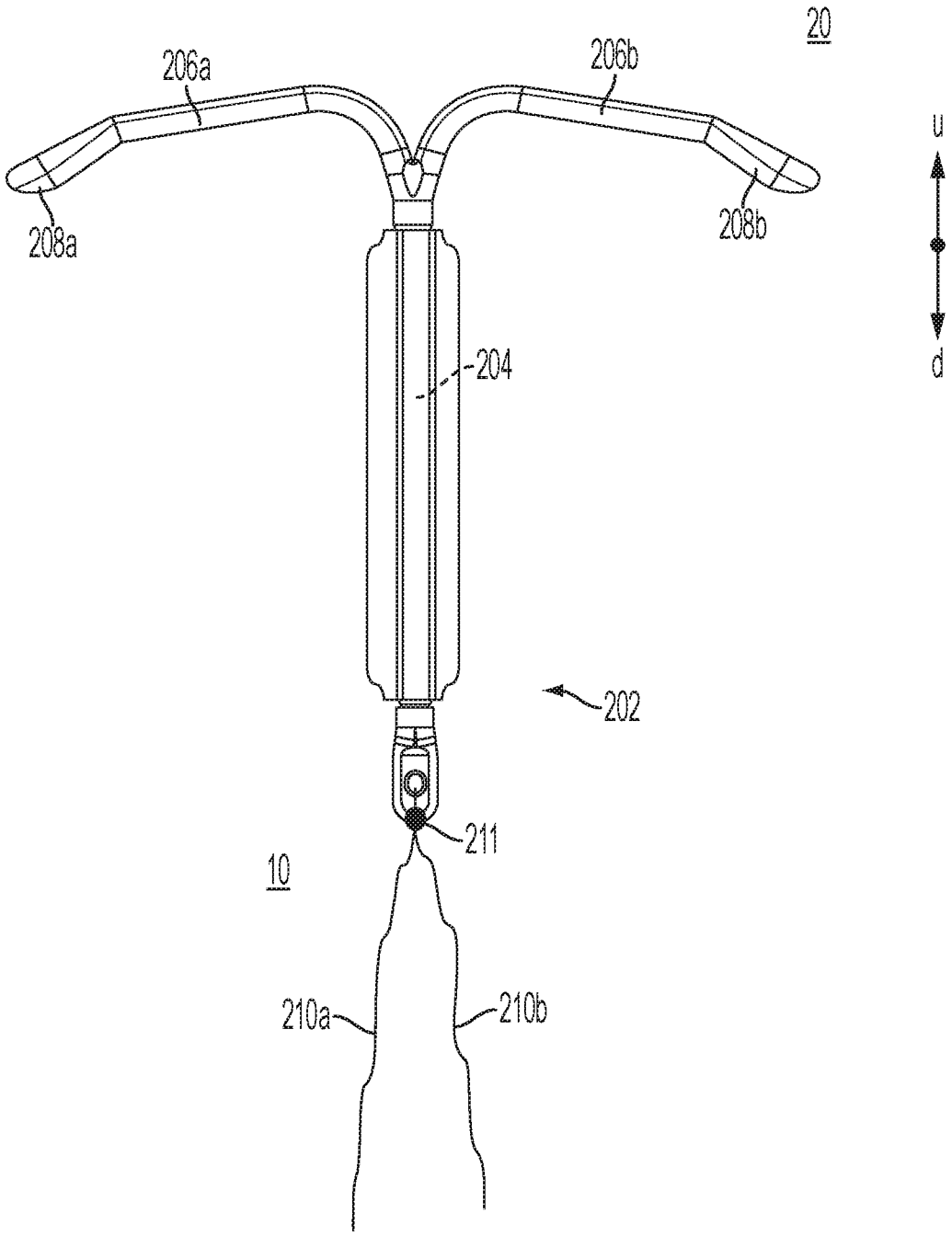

FIG. 2
PRIOR ART

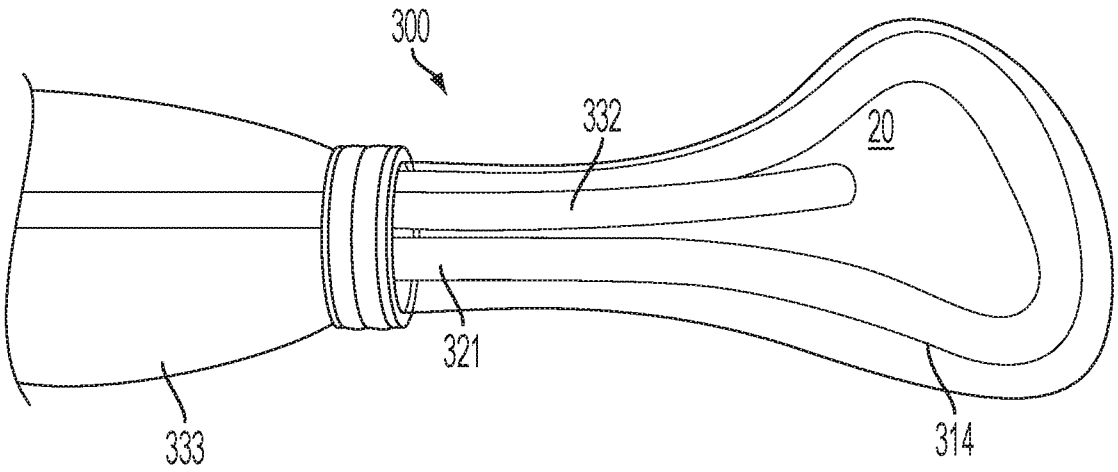

FIG. 3A

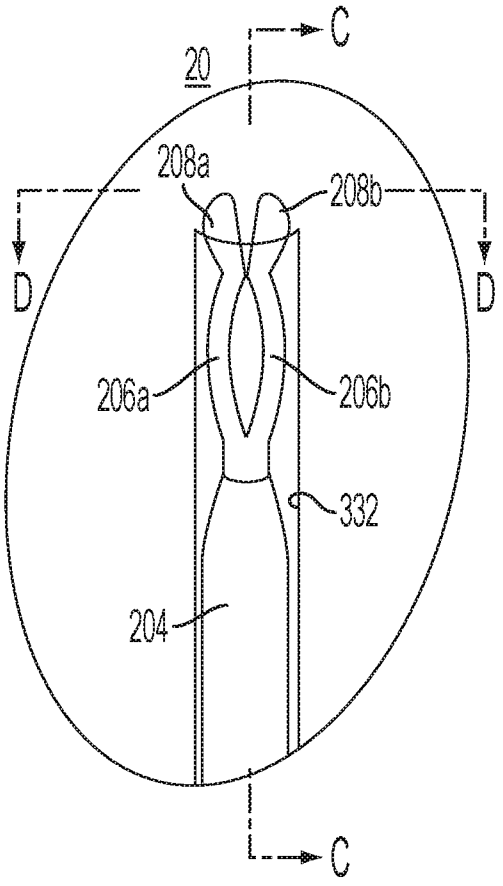

FIG. 3B

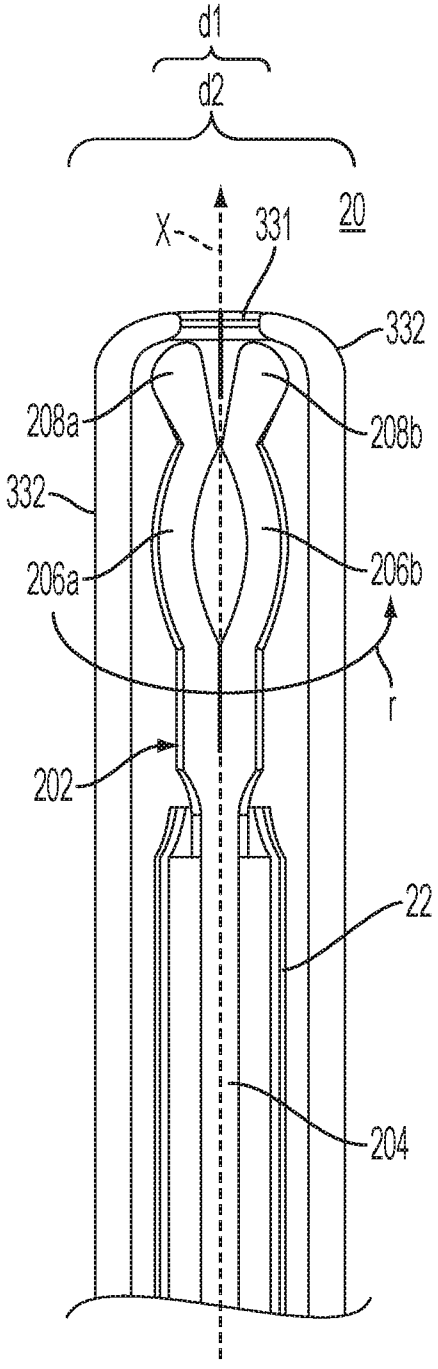
d1
d2
X
331
20
332
208a
208b
332
206a
206b
r
202
22
204

FIG. 3C

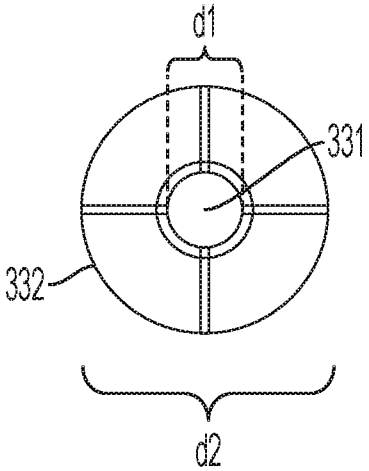
d1
331
332
d2

FIG. 3D

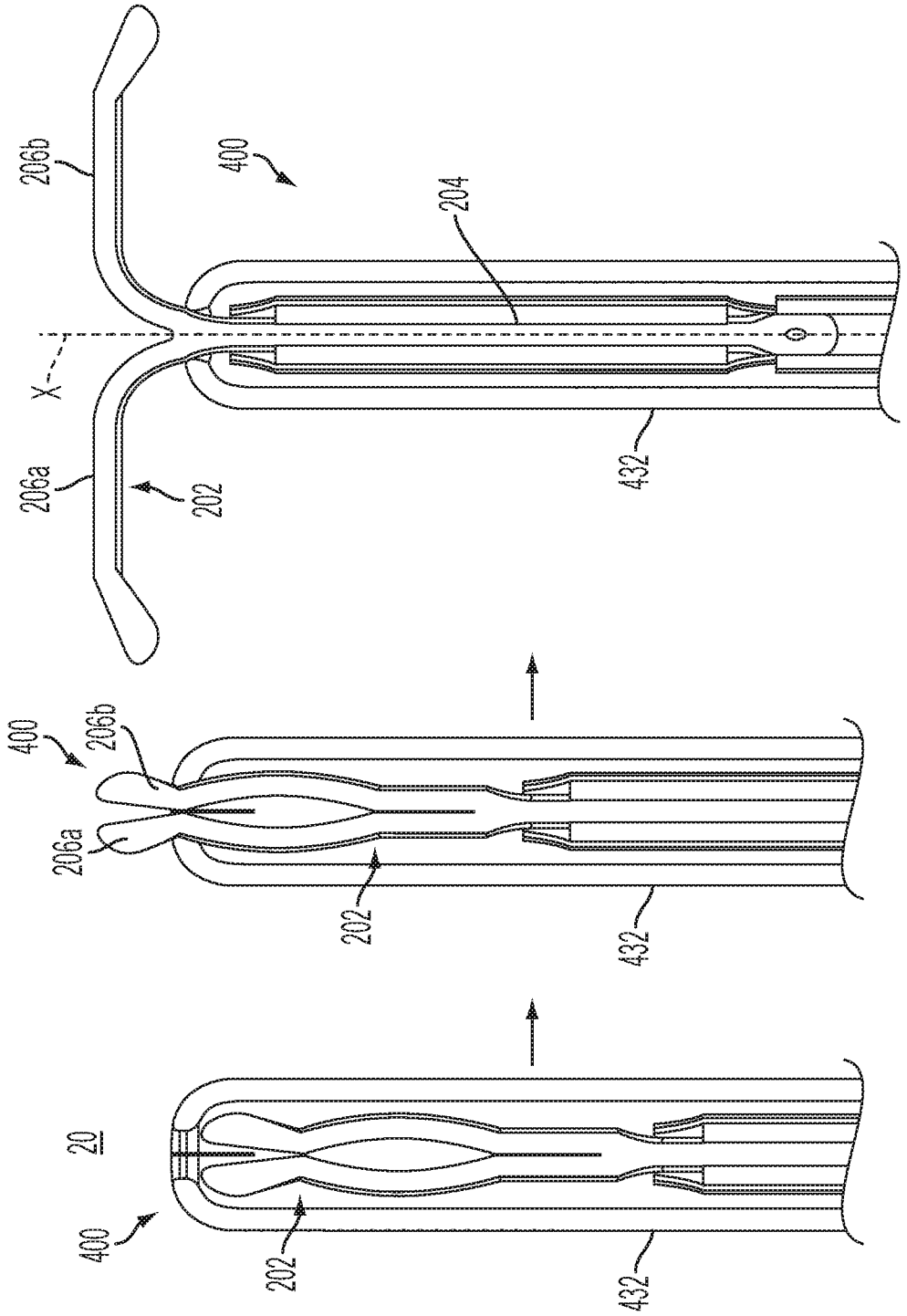

FIG. 4C

FIG. 4B

FIG. 4A

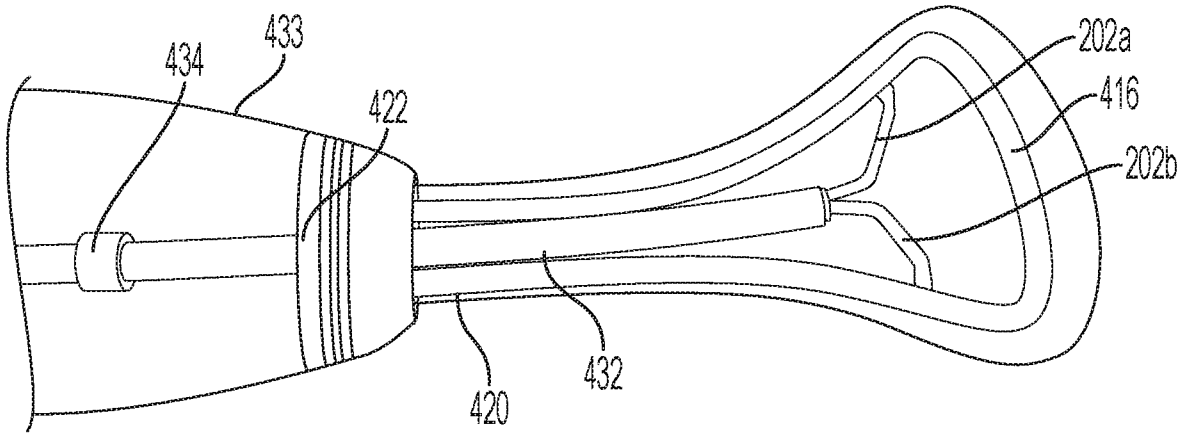

FIG. 4D

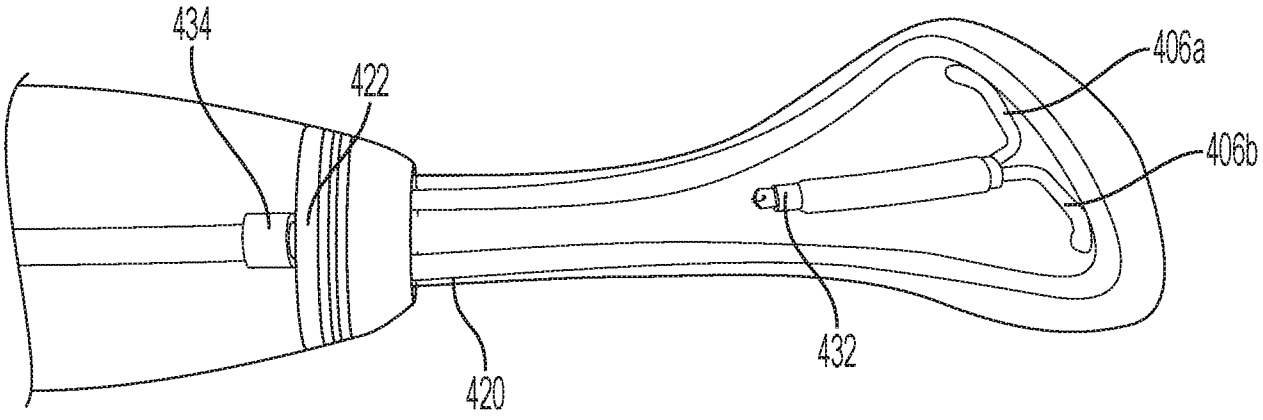

FIG. 4E

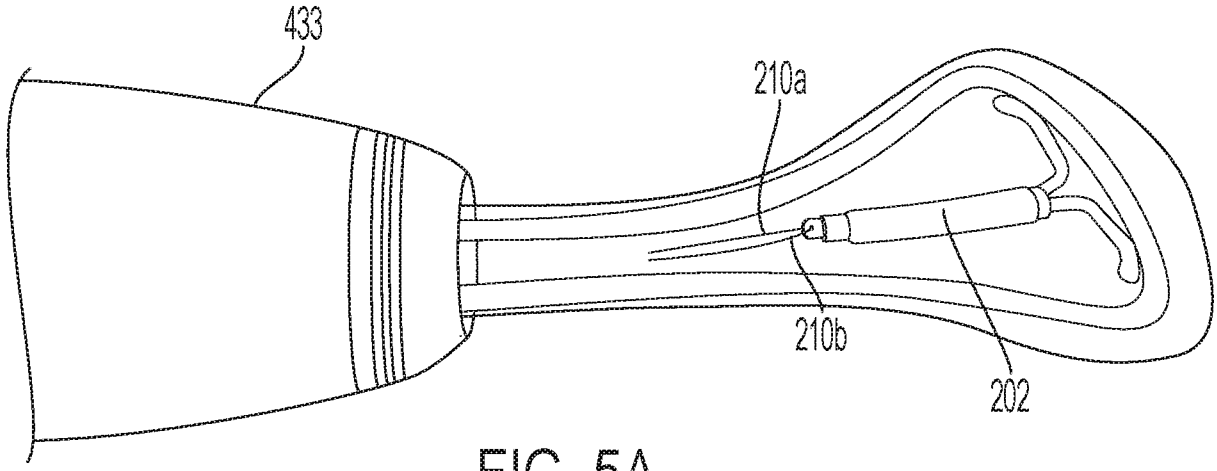
433
210a
210b
202

FIG. 5A

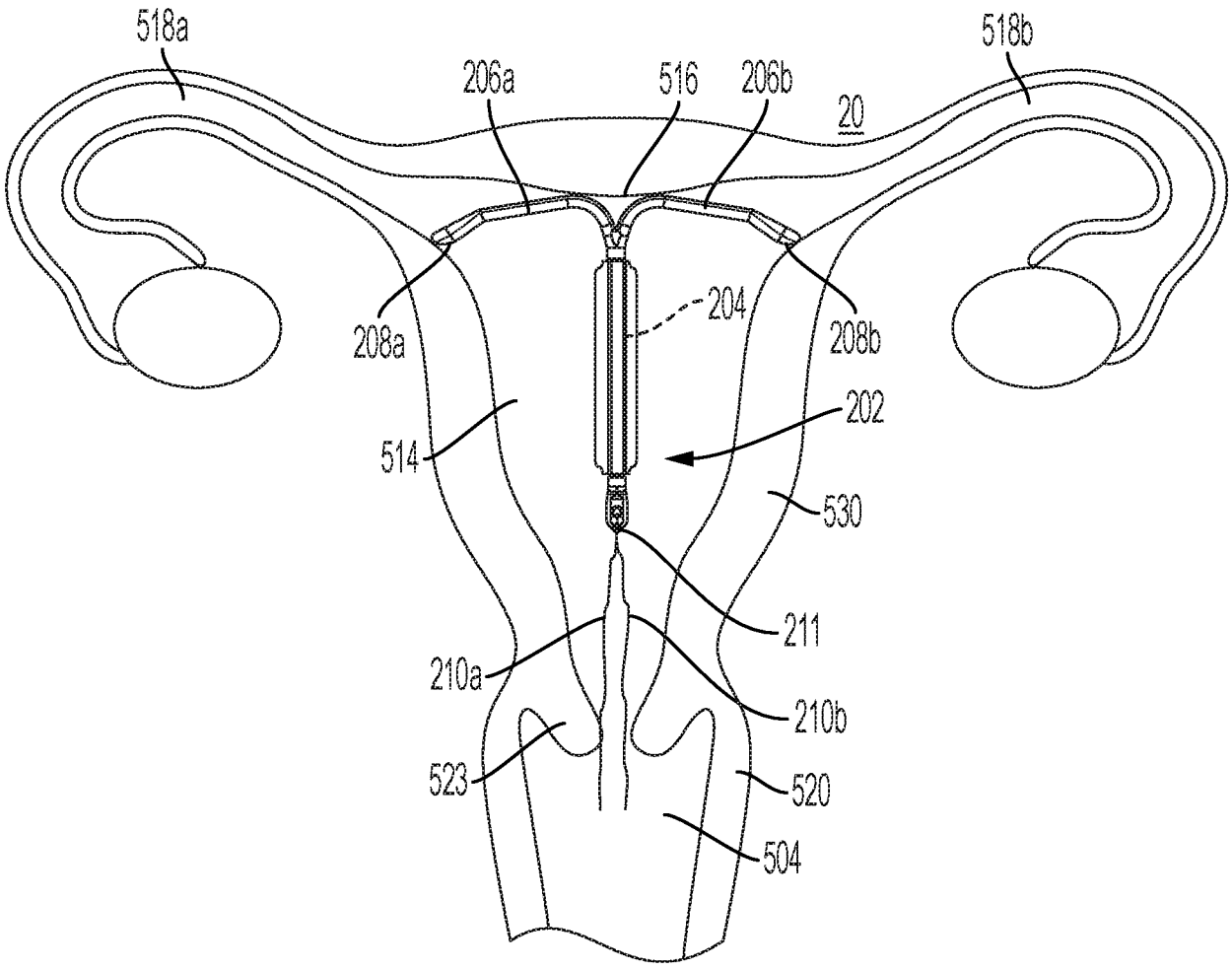
518a
518b
206a
516
206b
20
204
208a
208b
202
514
530
211
210a
210b
523
520
504

FIG. 5B

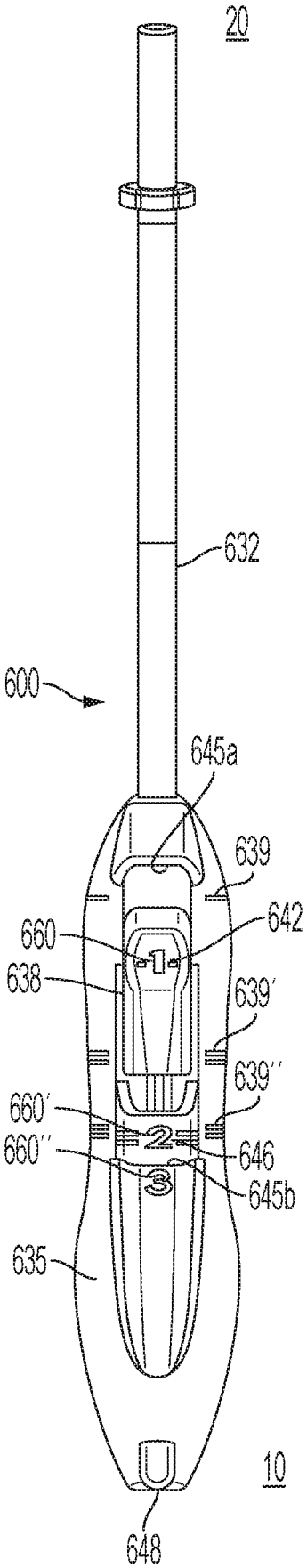
20
632
600
645a
639
642
660
638
639'
639''
660'
660''
646
645b
635
10
648

FIG. 6A

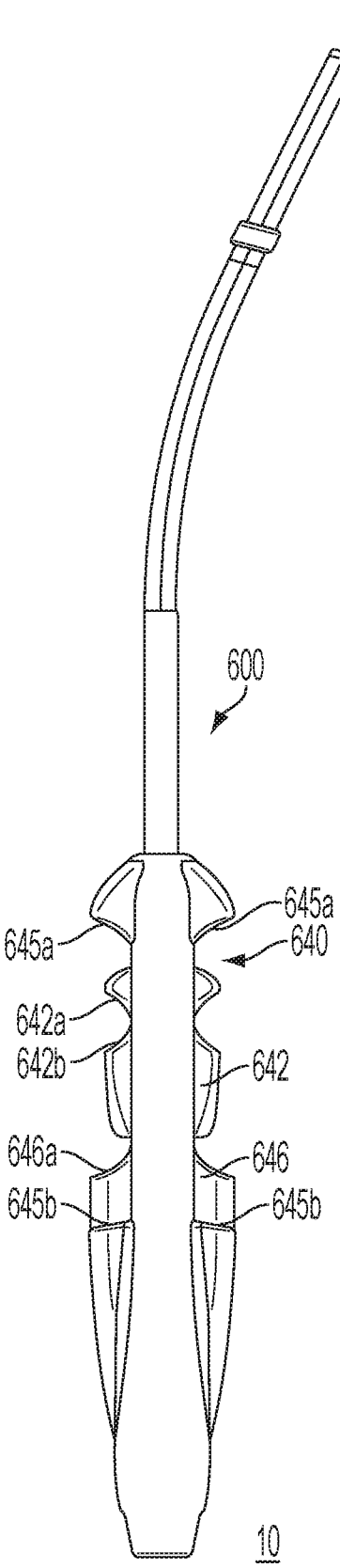
20
600
645a
645a
640
642a
642b
642
646a
646
645b
645b
10

FIG. 6B

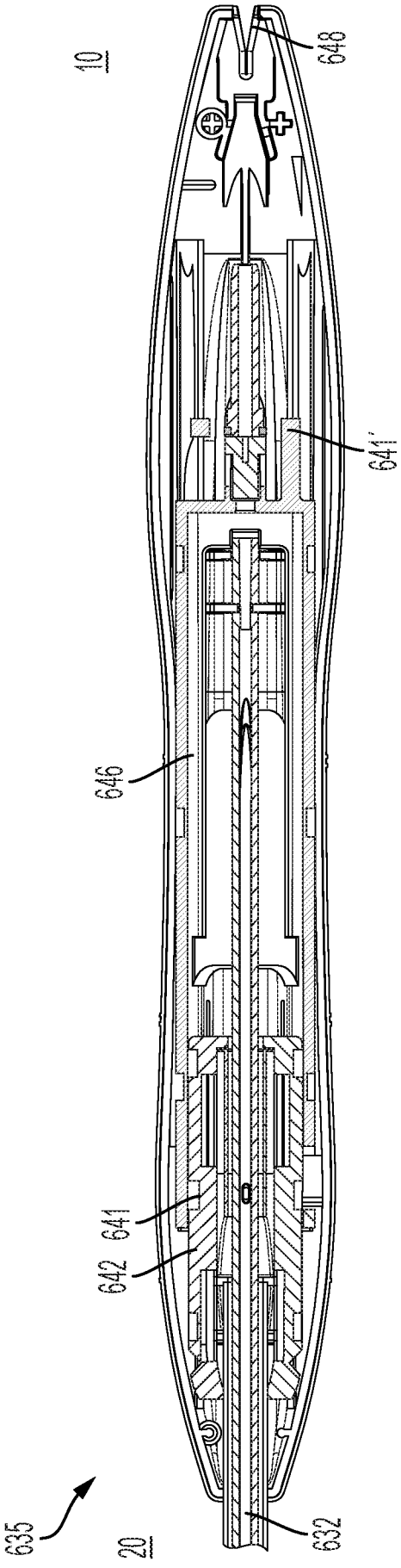

FIG. 6C

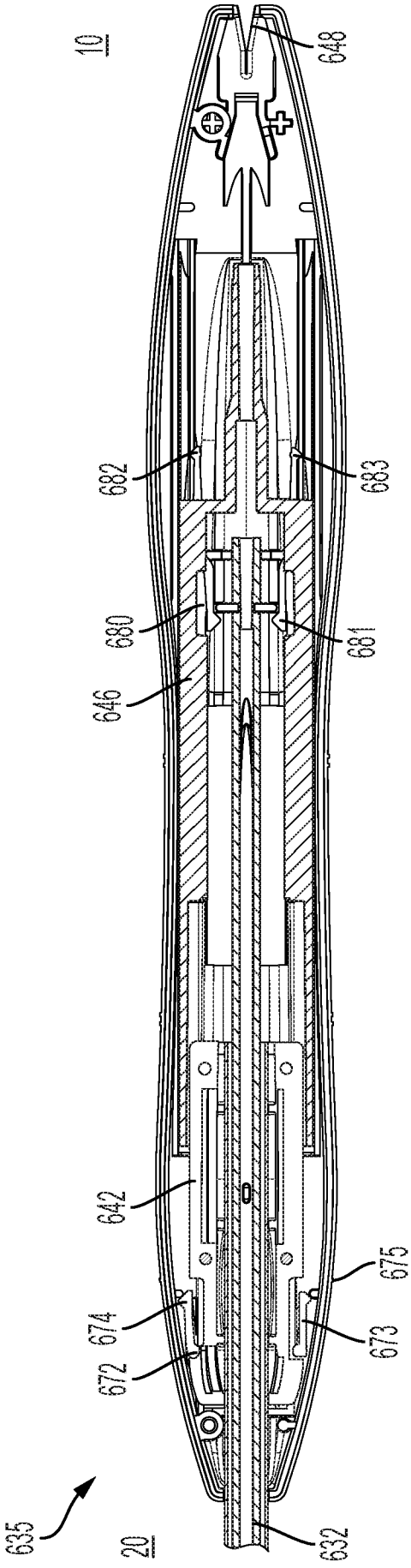

FIG. 6D

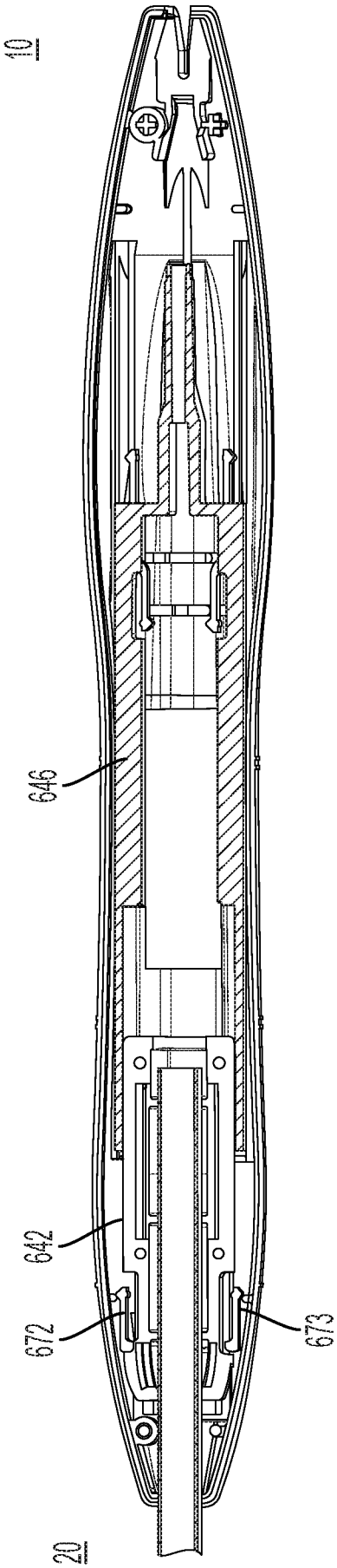

FIG. 6E

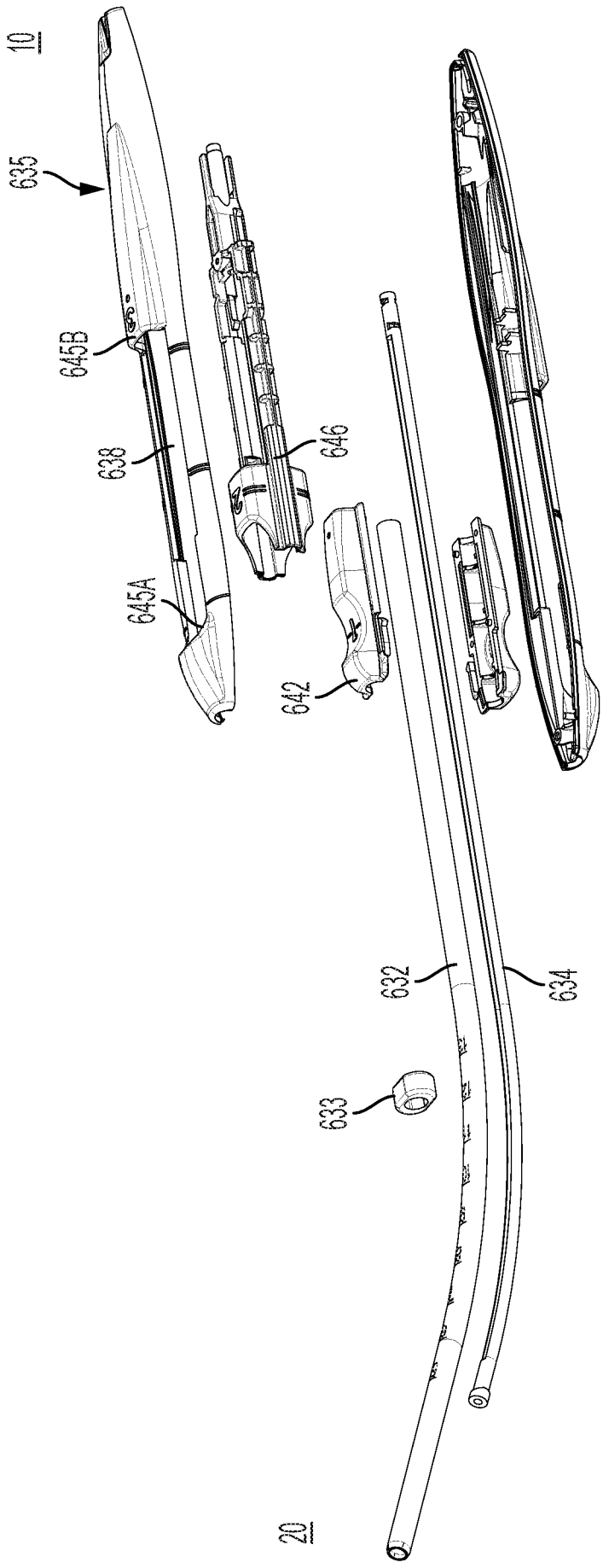

FIG. 6F

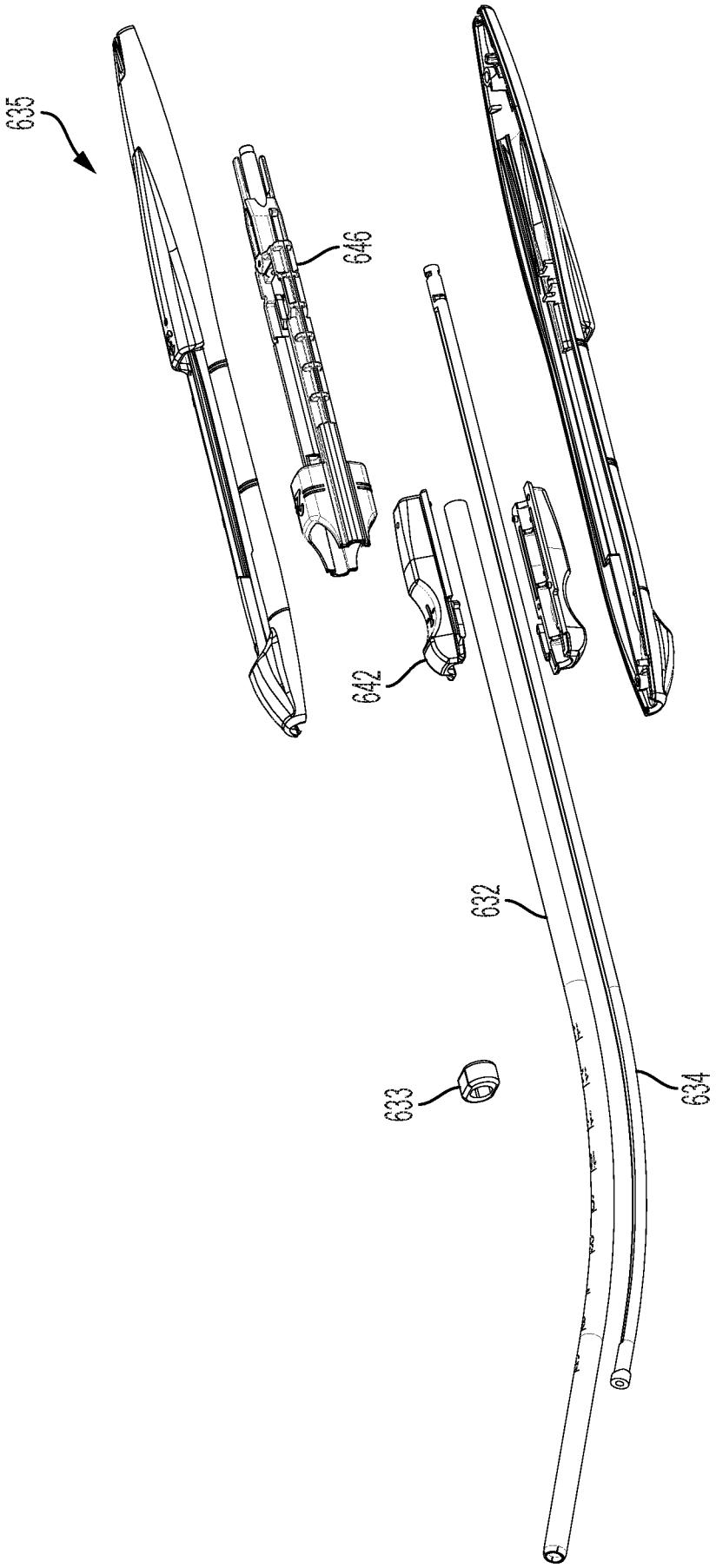

FIG. 6G

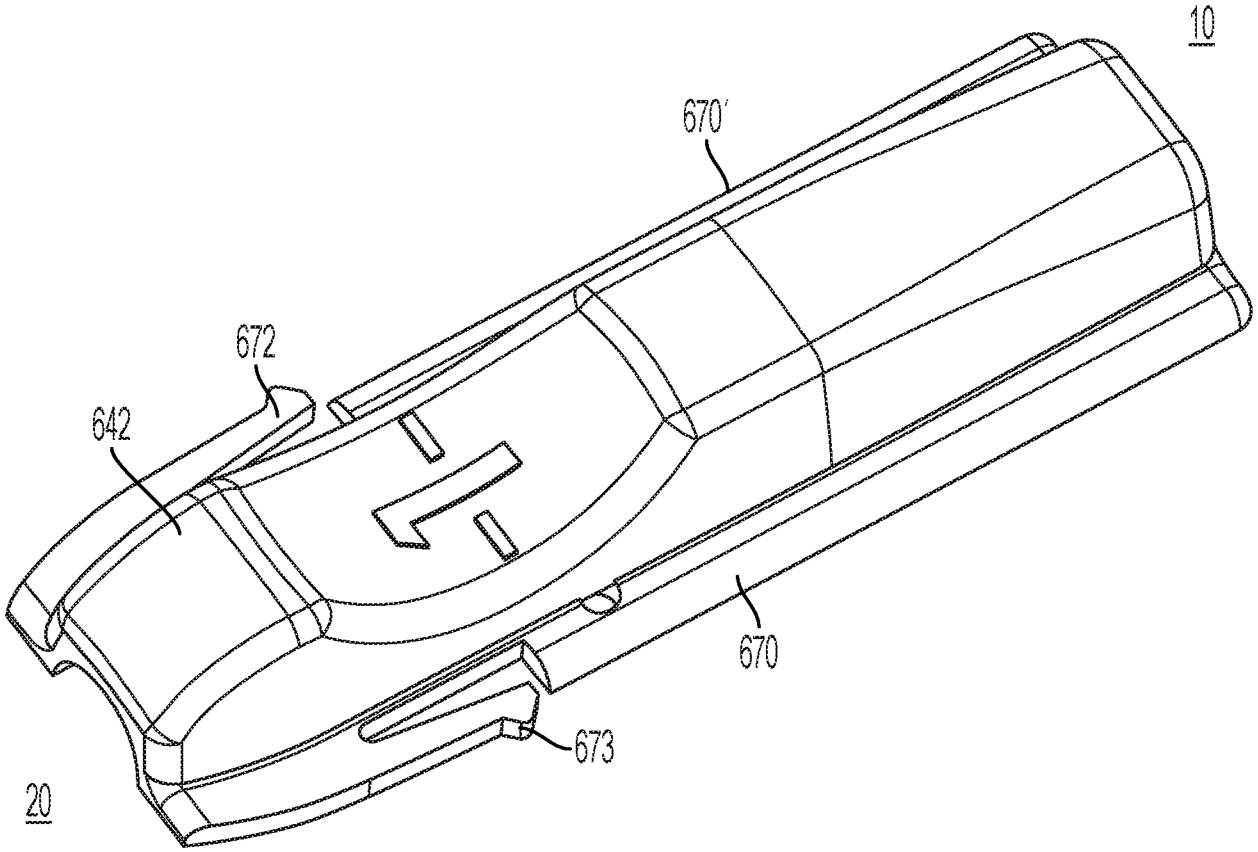

FIG. 7A

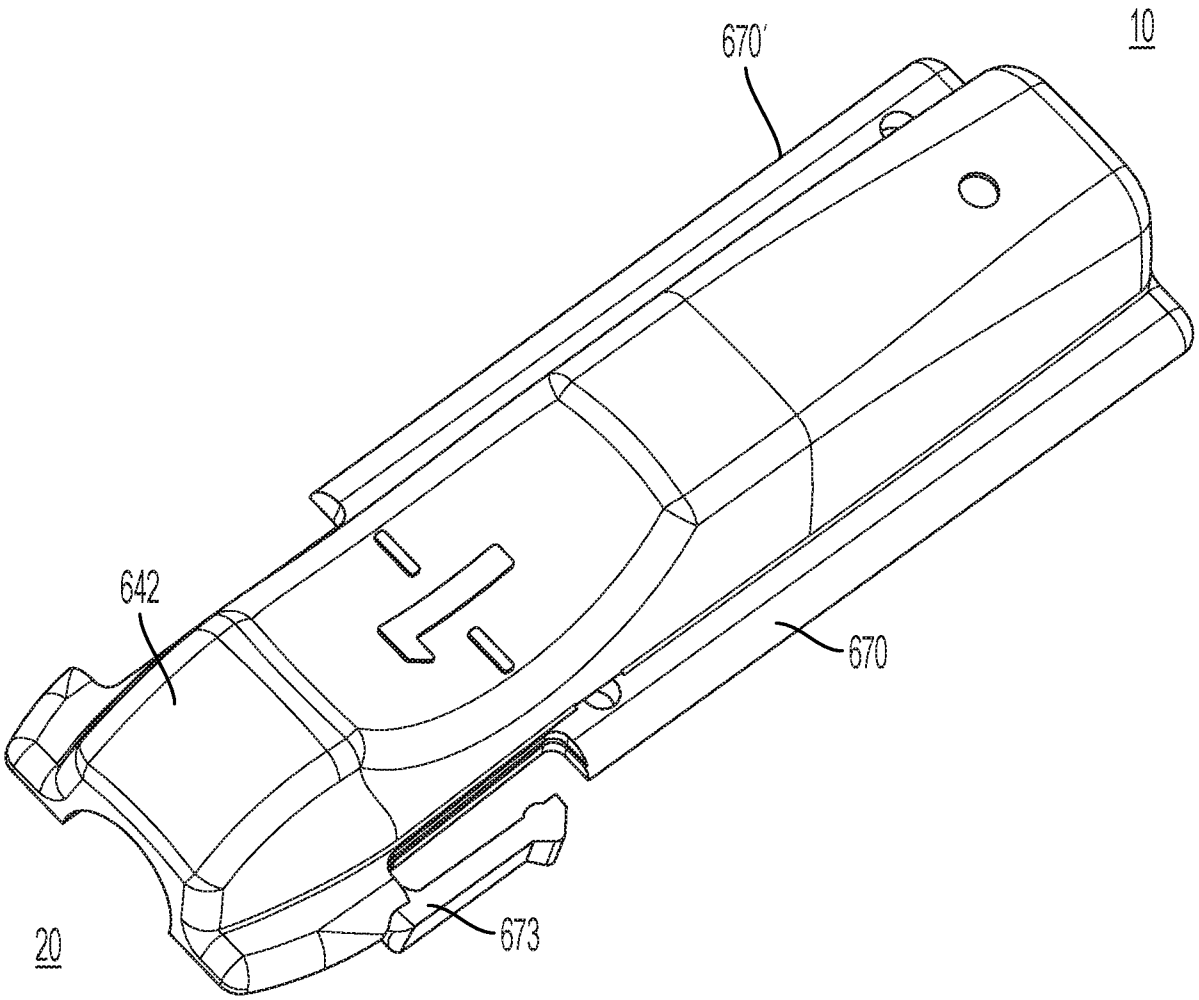

FIG. 7B

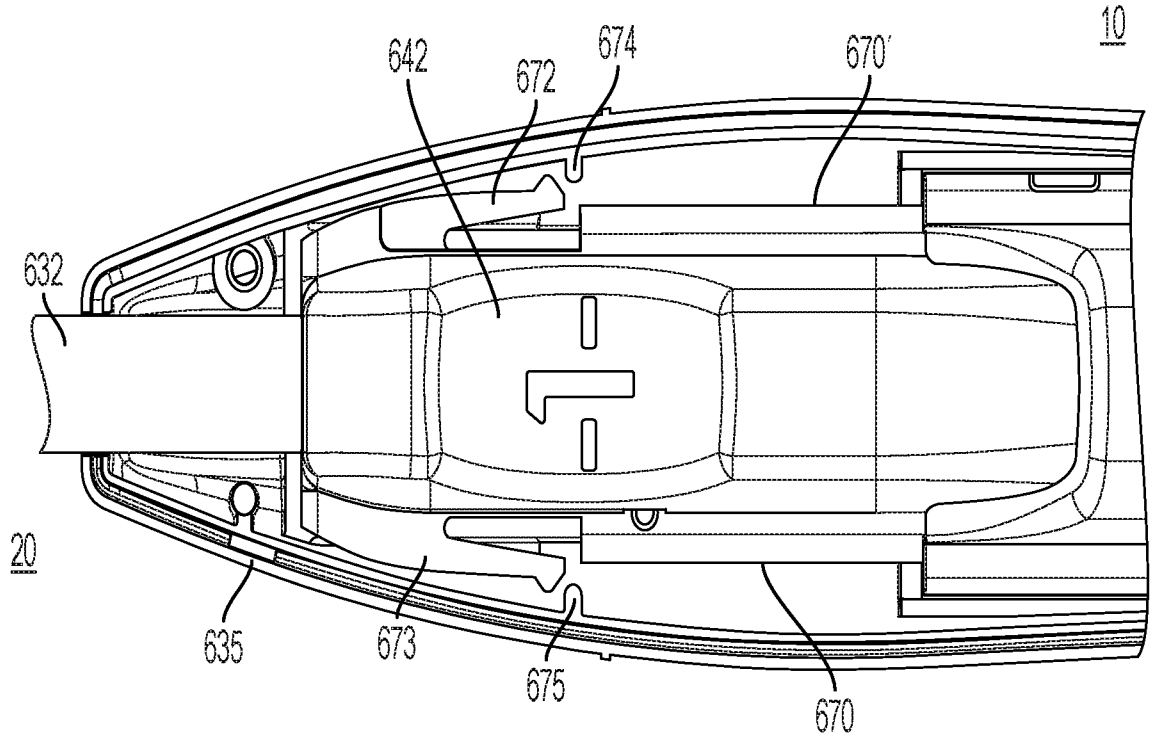

FIG. 7C

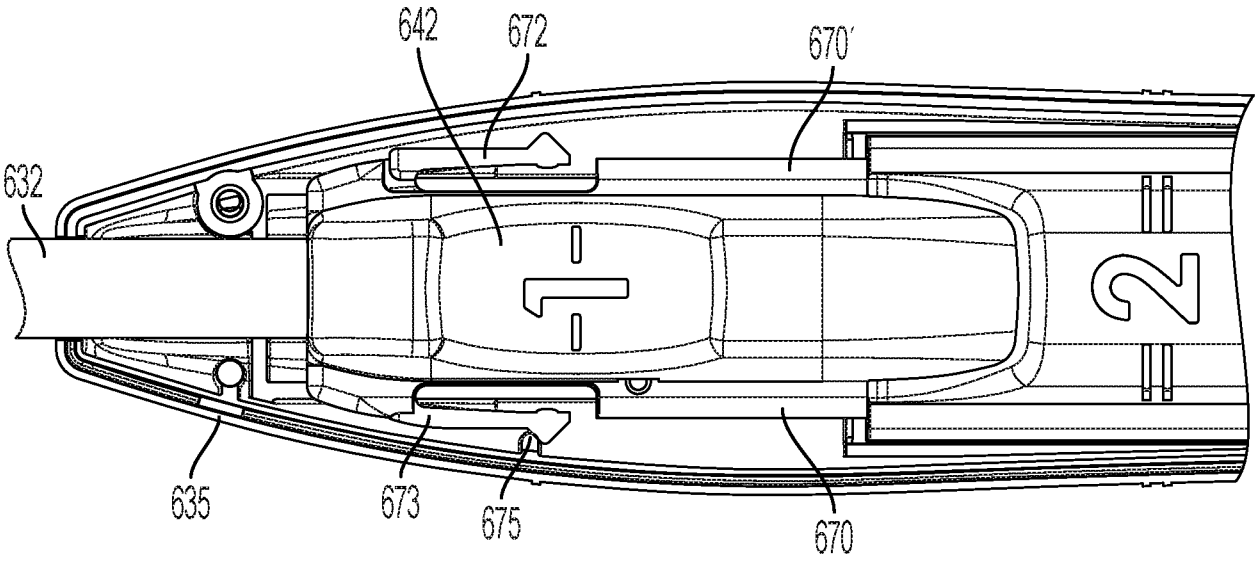

FIG. 7D

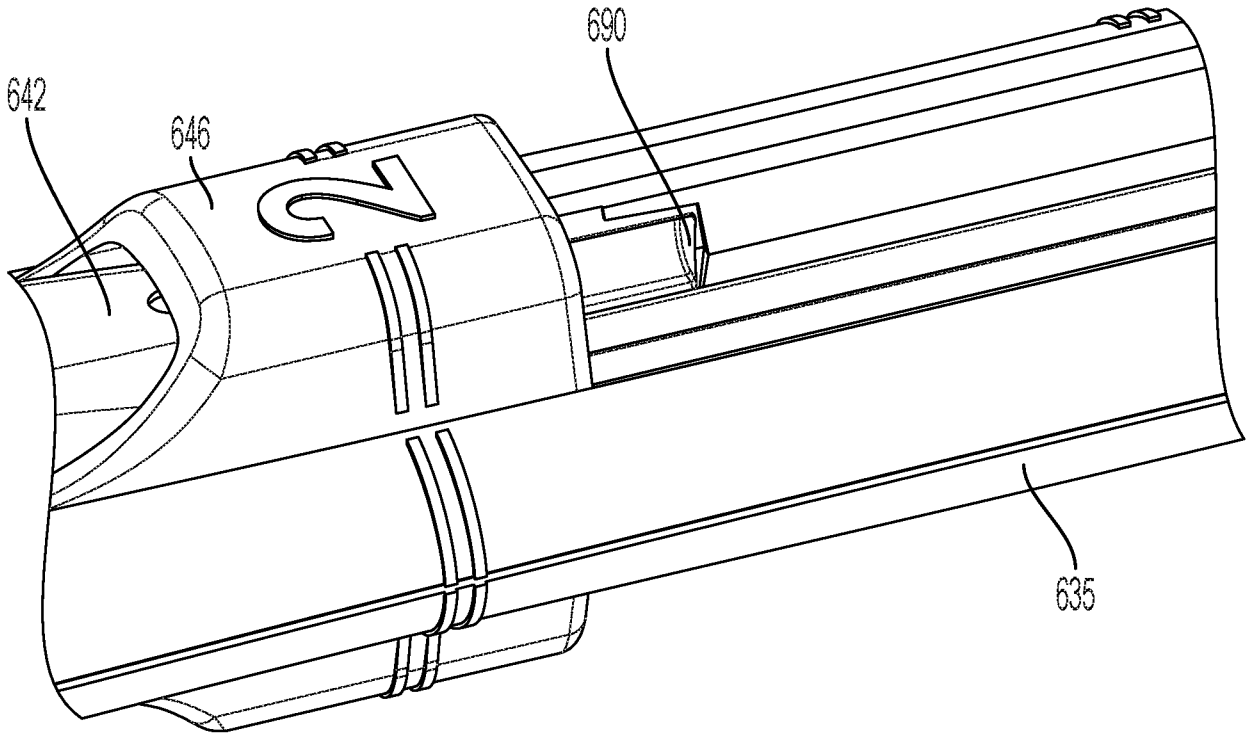

FIG. 8

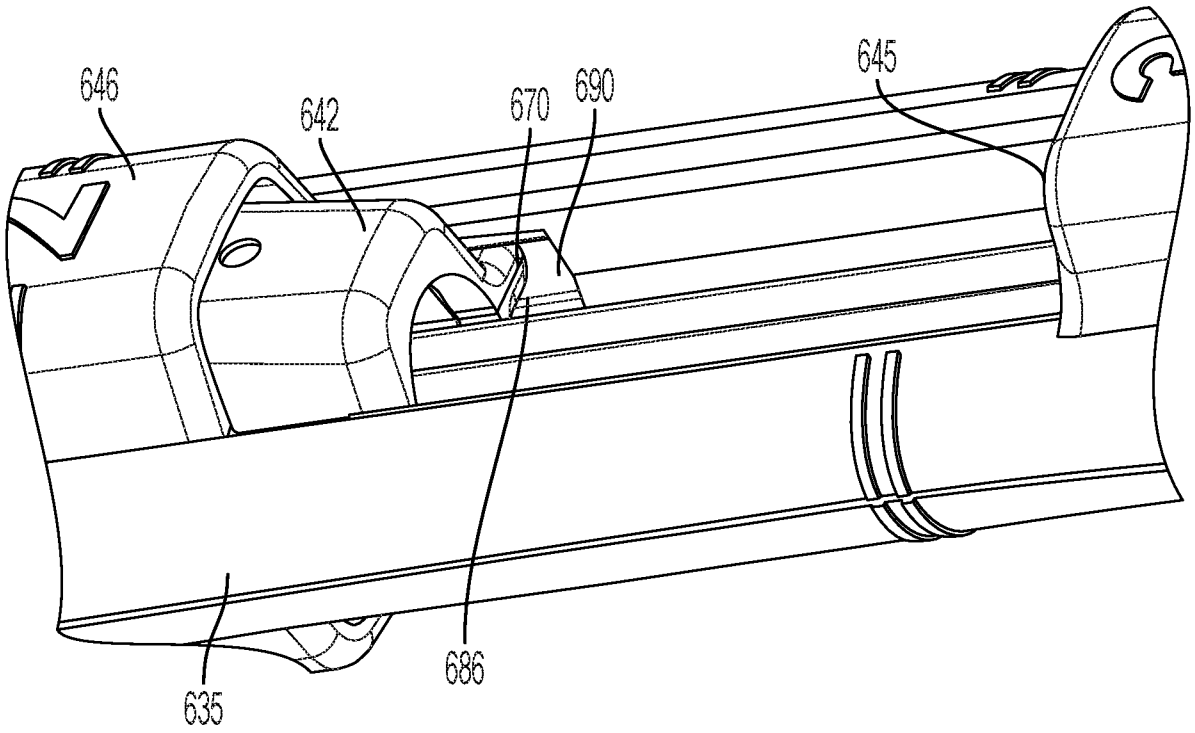

FIG. 9

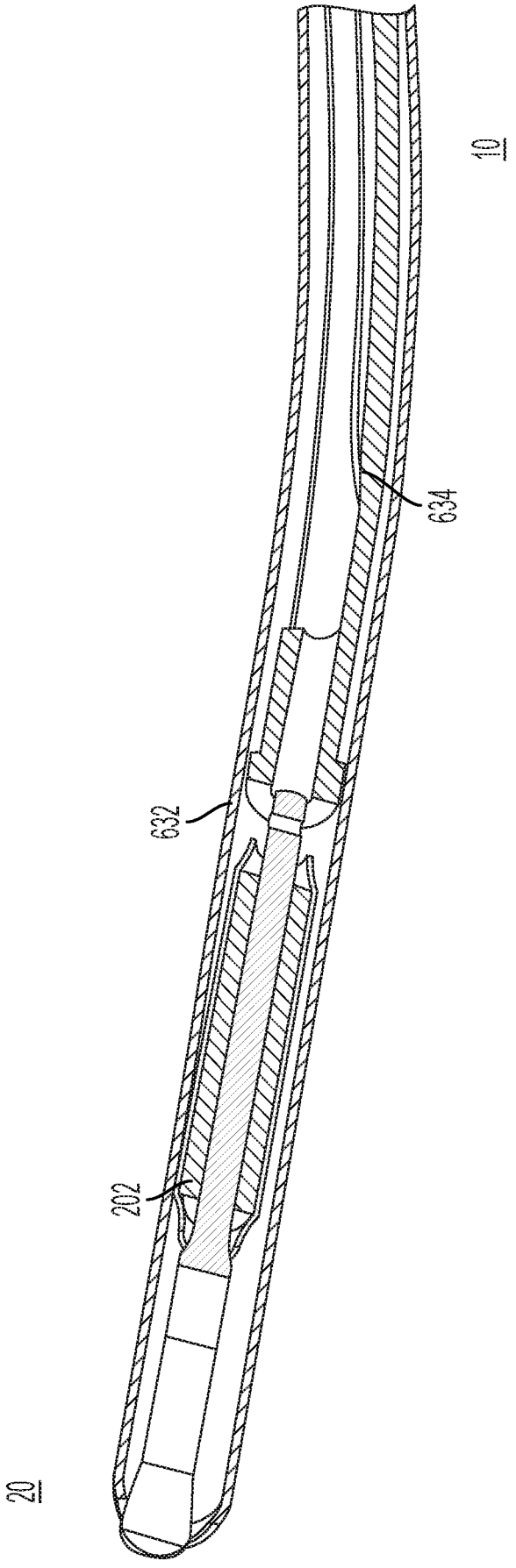

FIG. 10

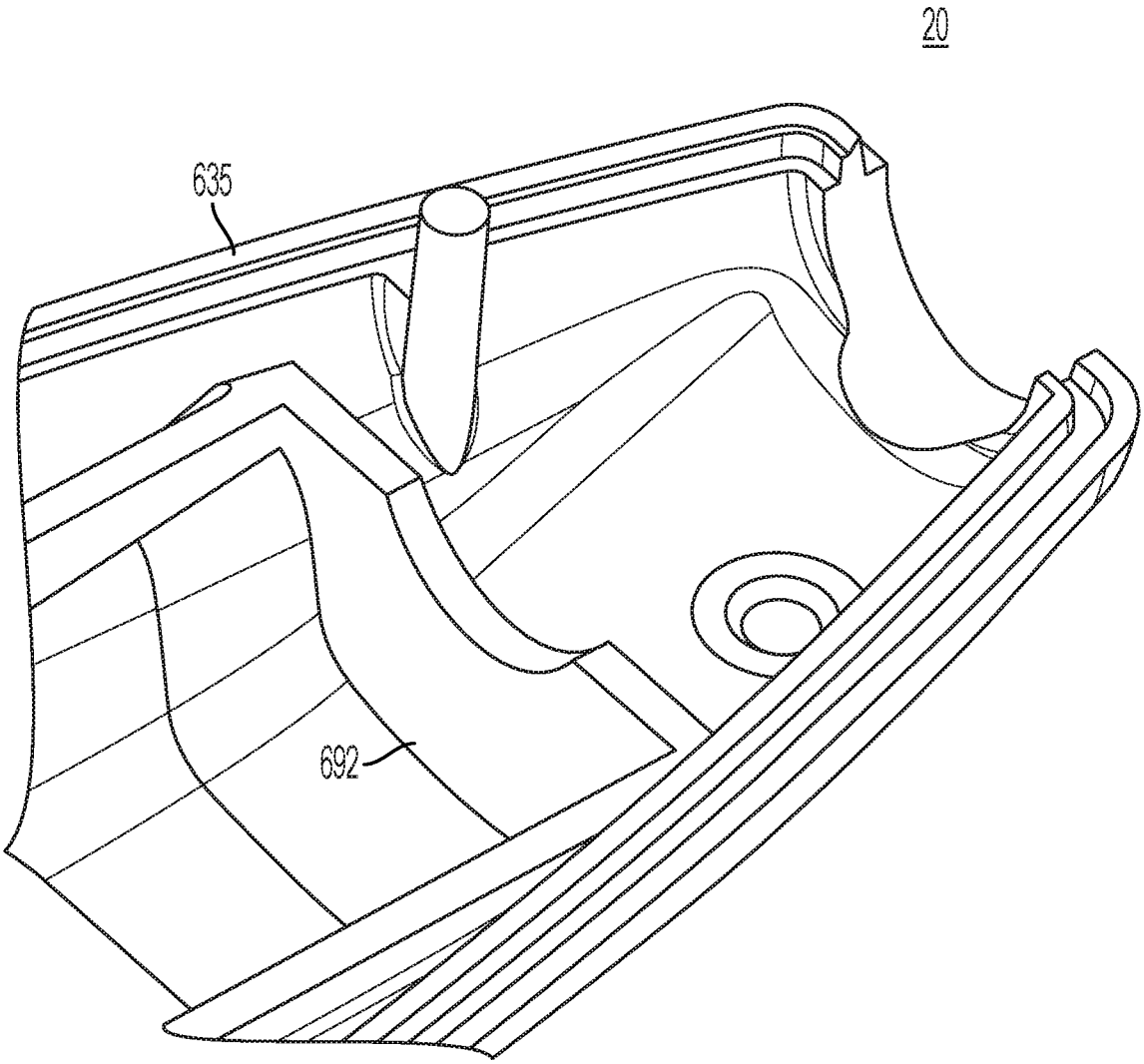

FIG. 11

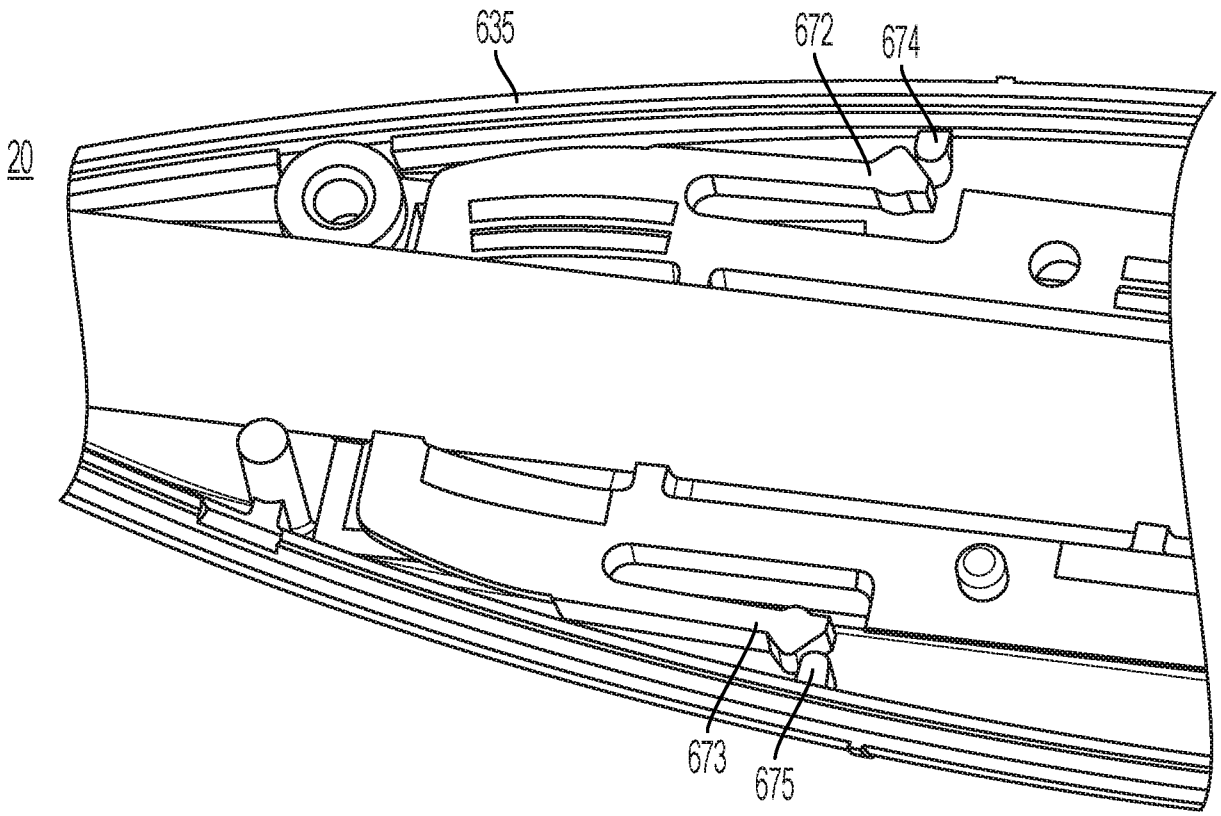

FIG. 12A

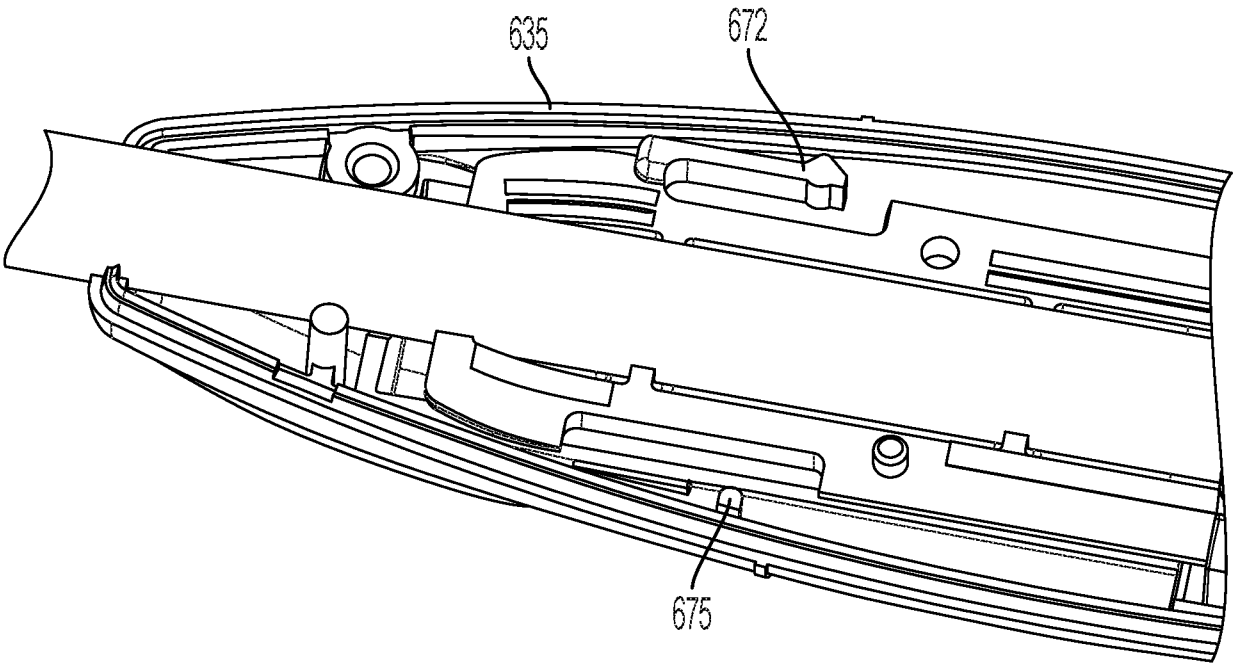

FIG. 12B

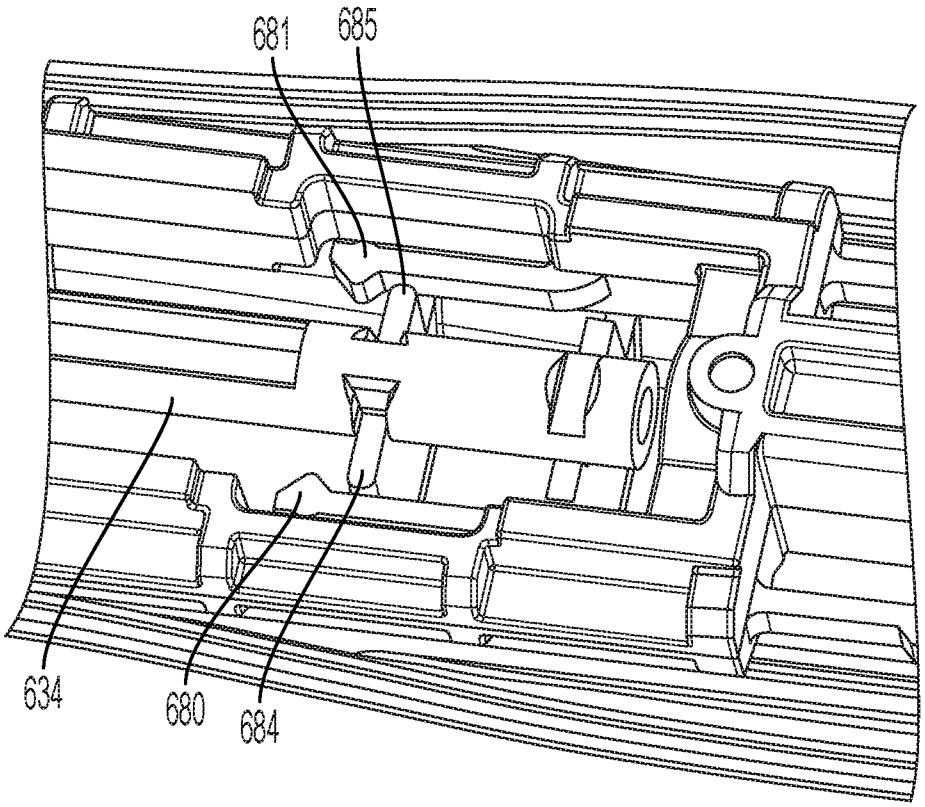

FIG. 12C

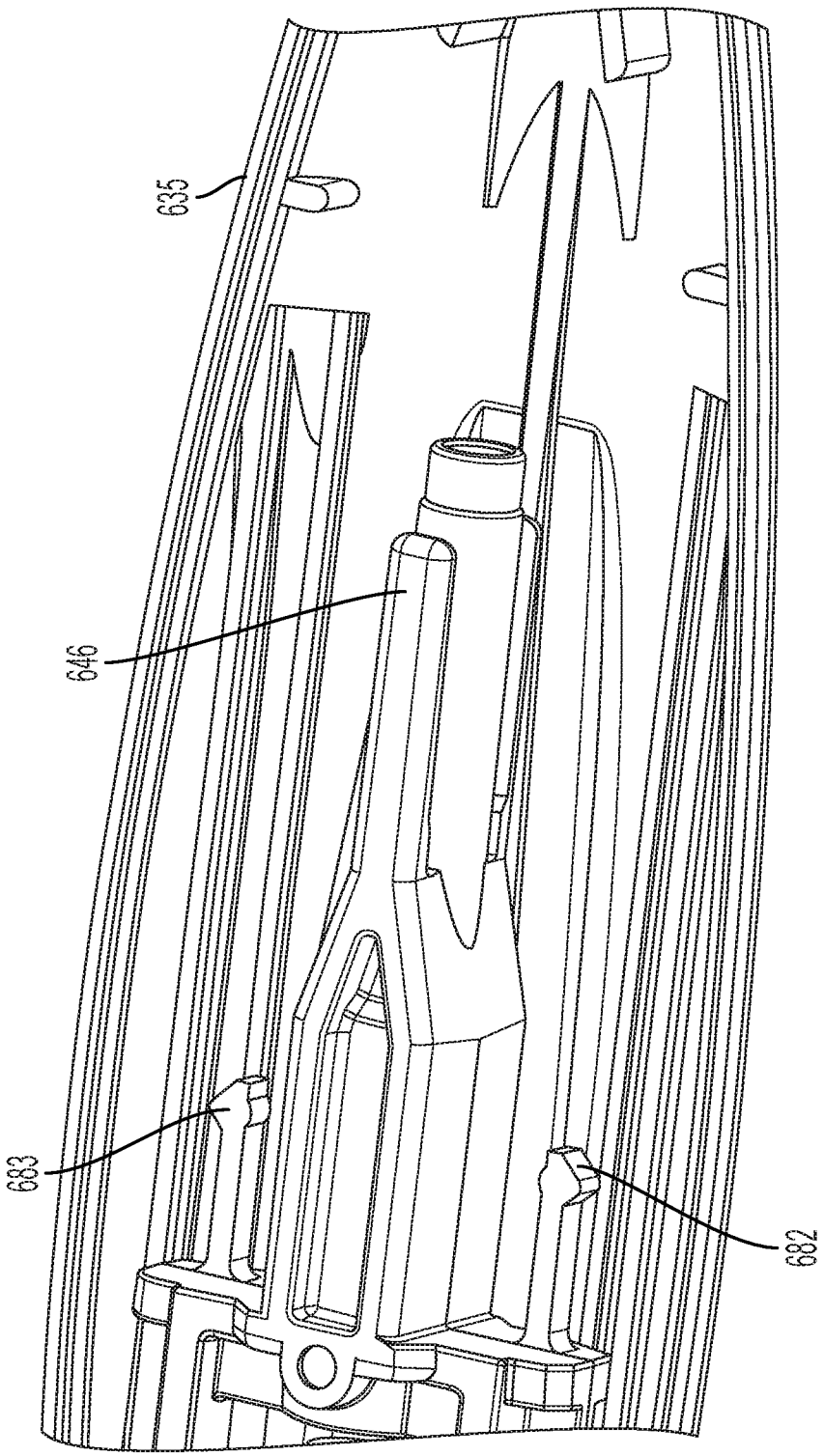

FIG. 12D

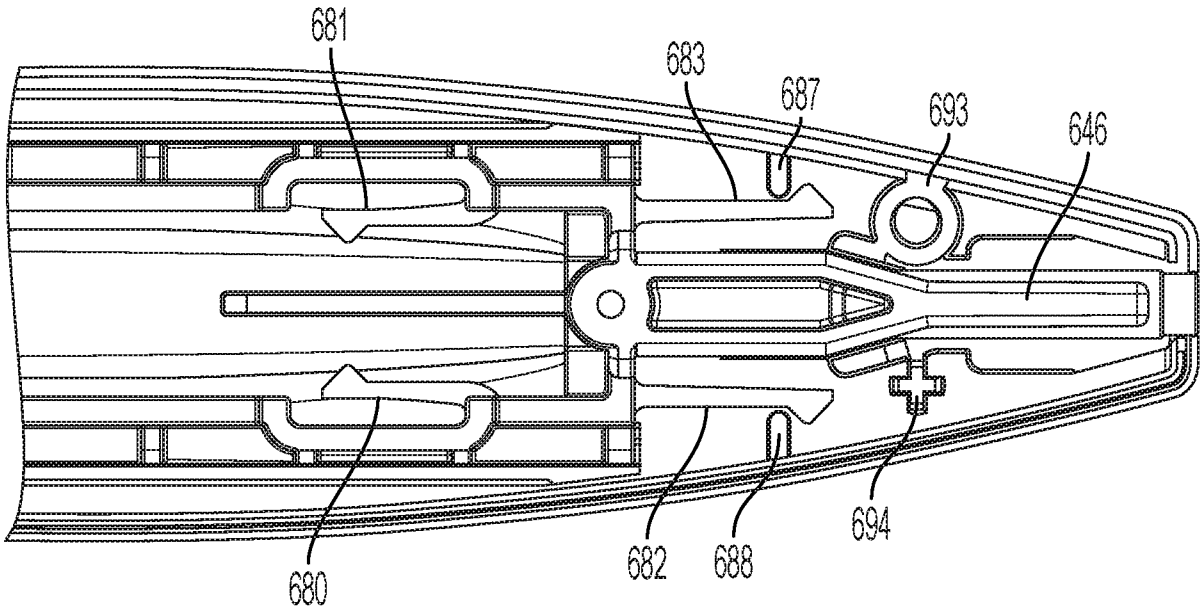

FIG. 12E

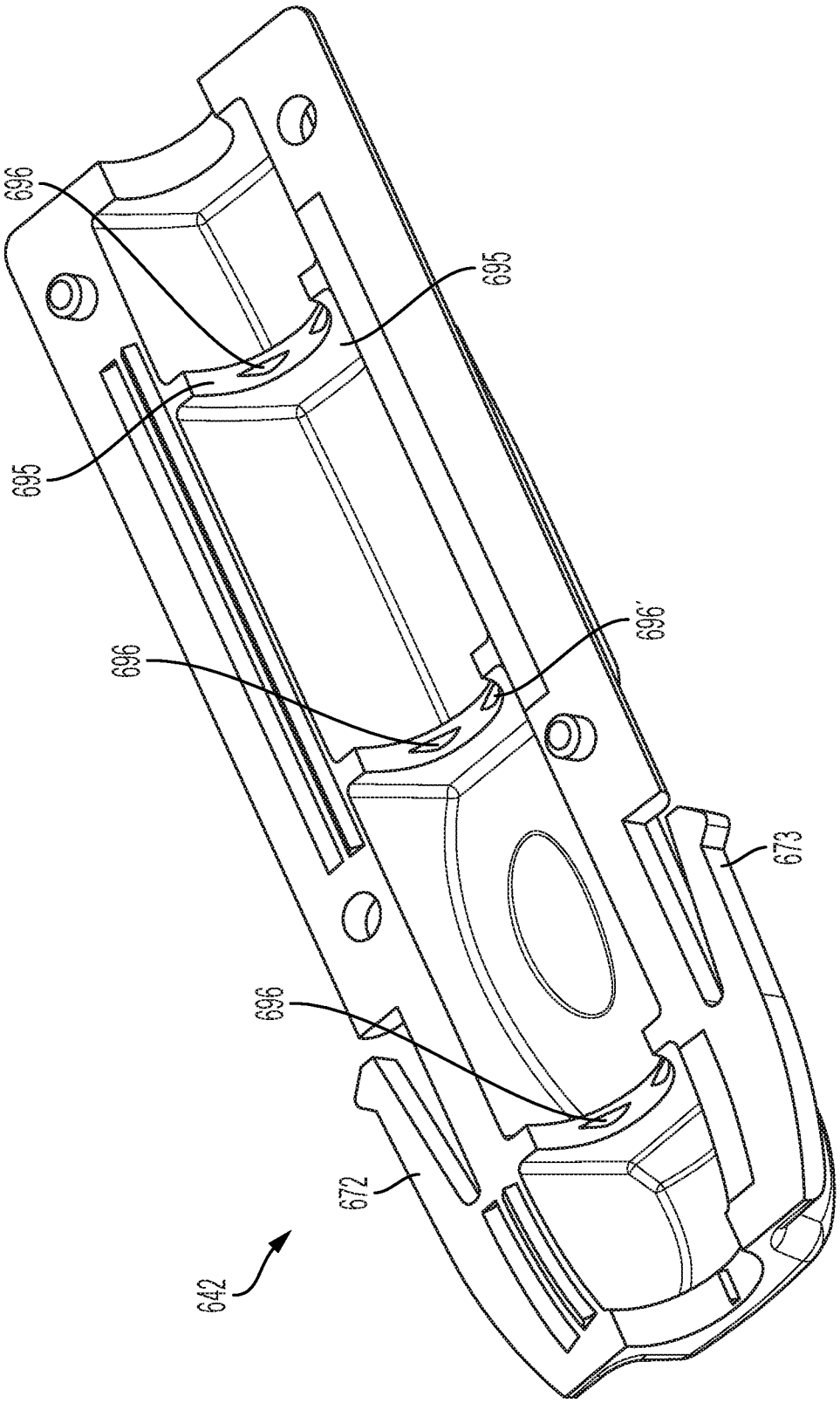

FIG. 13A

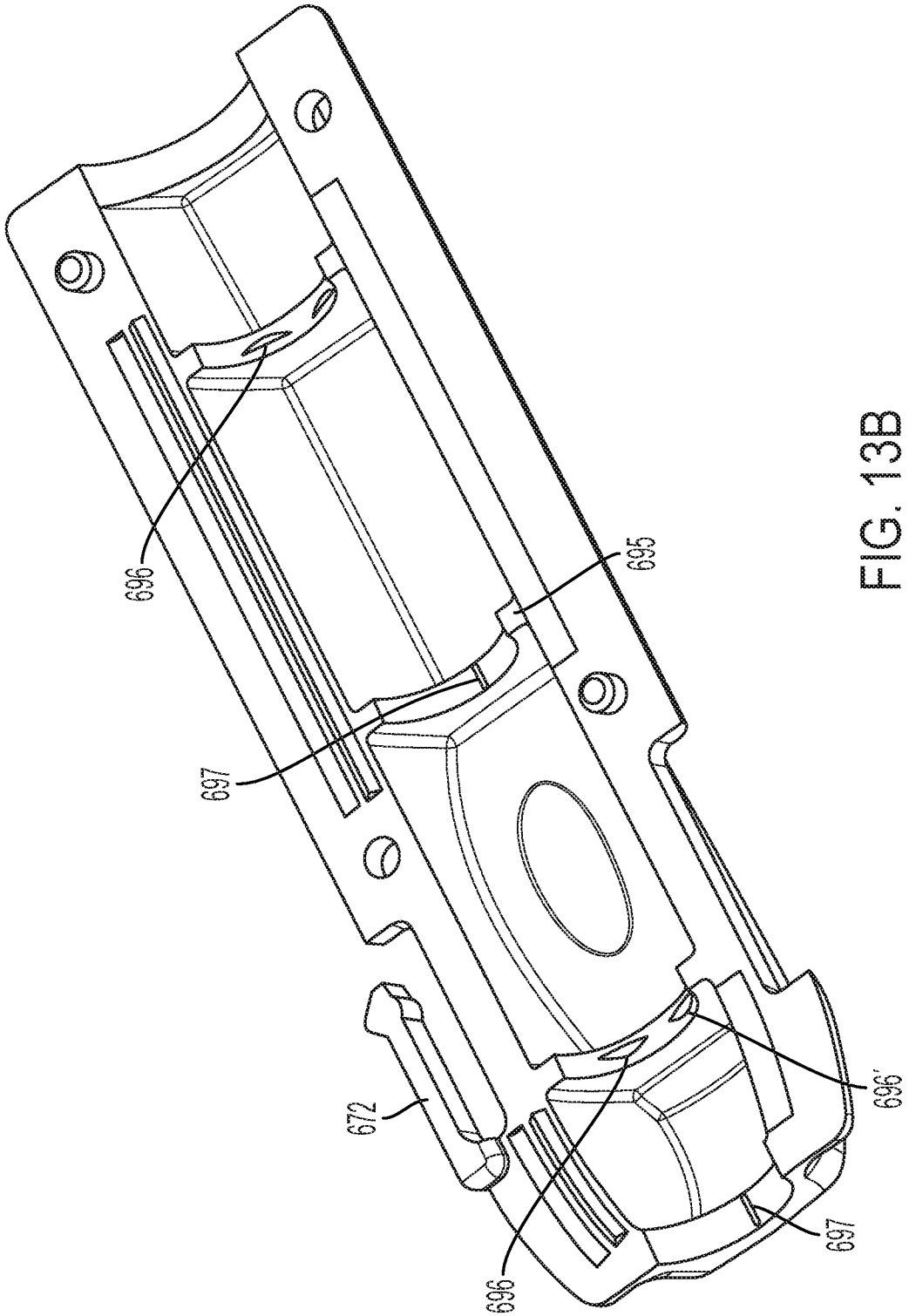

FIG. 13B

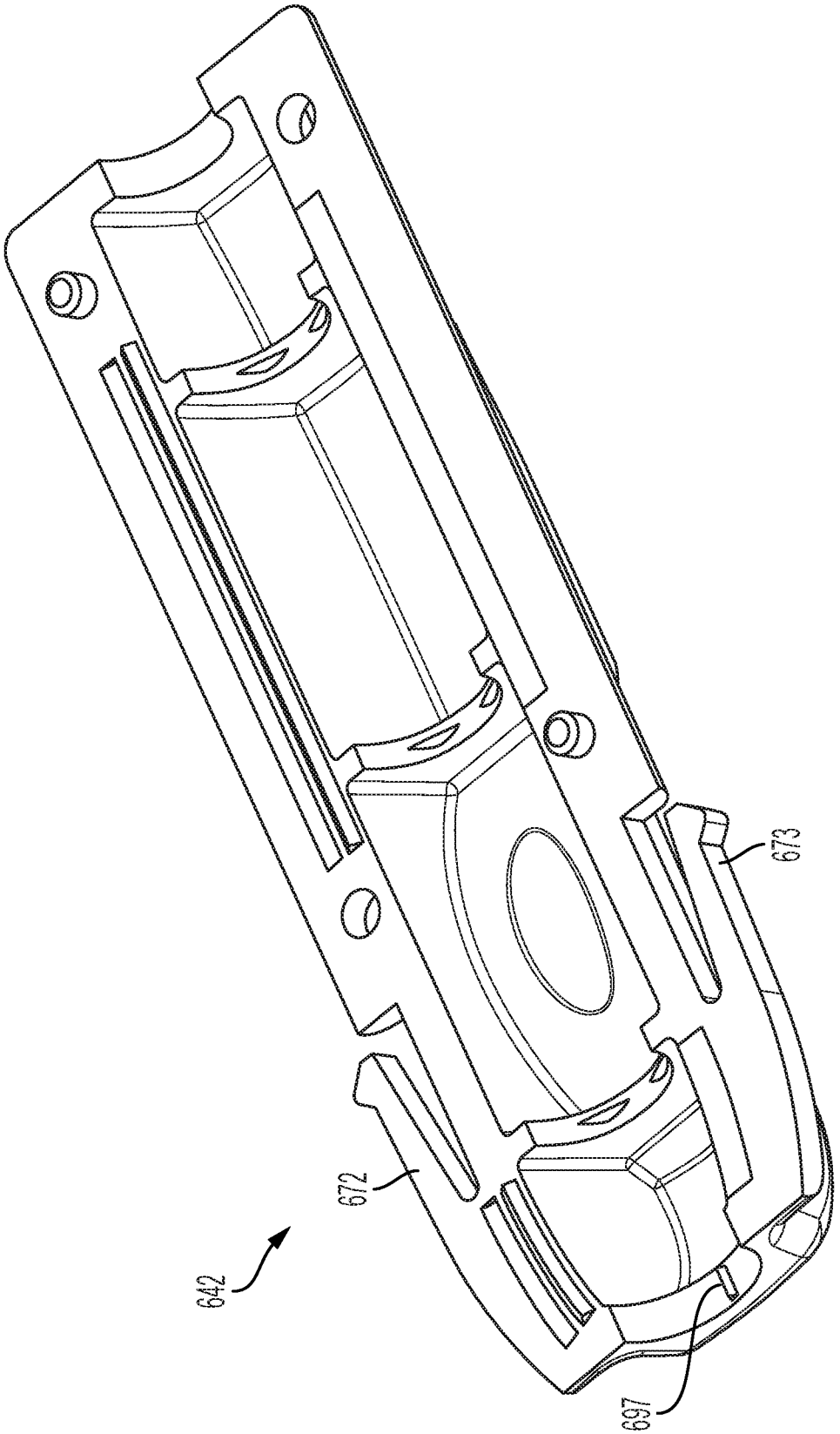

FIG. 13C

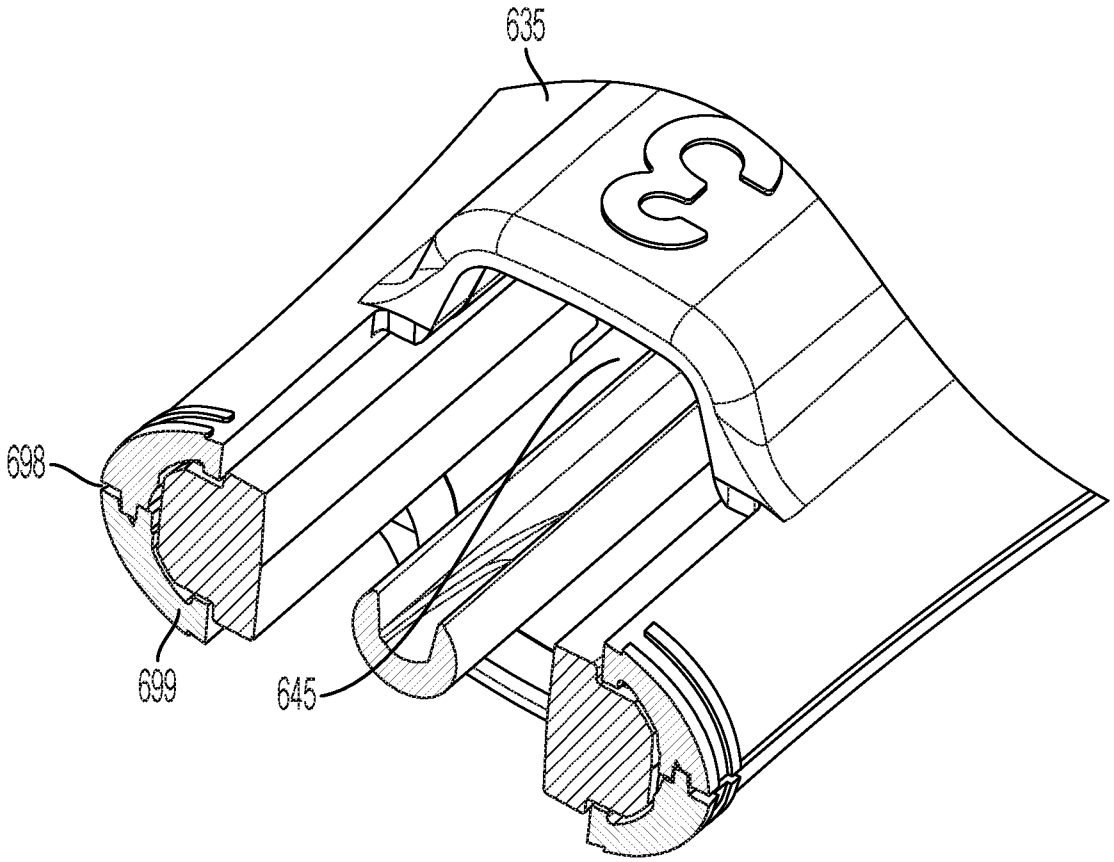

FIG. 14

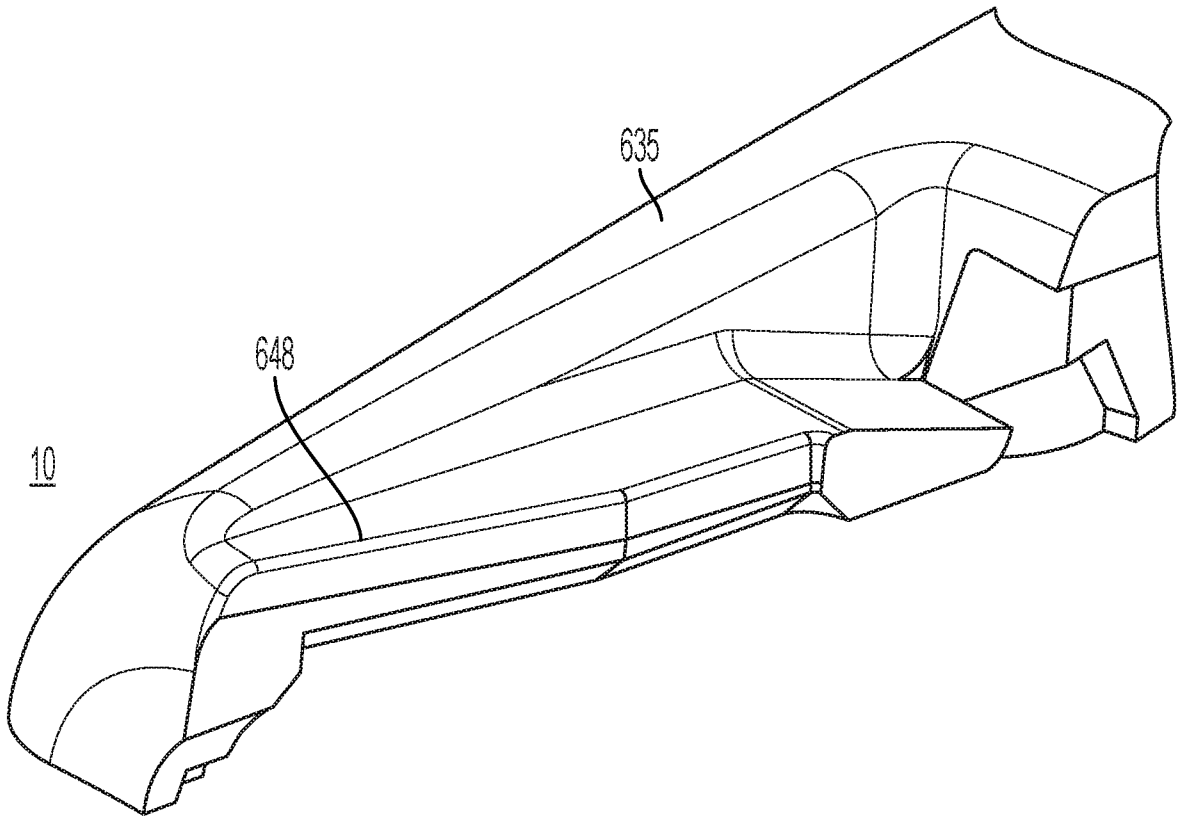

FIG. 15

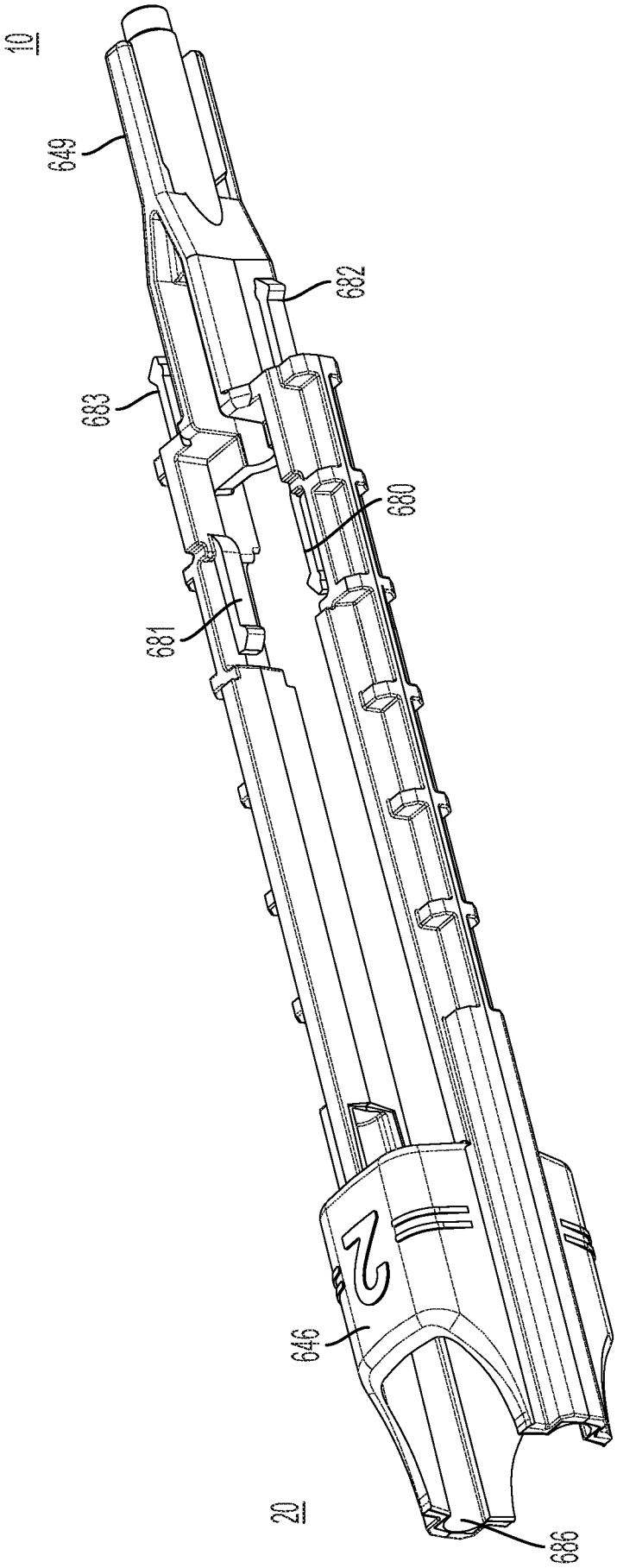

FIG. 16

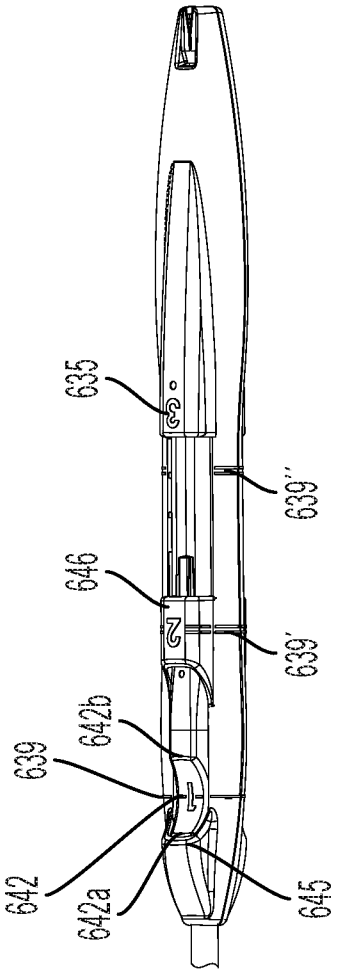

FIG. 17A

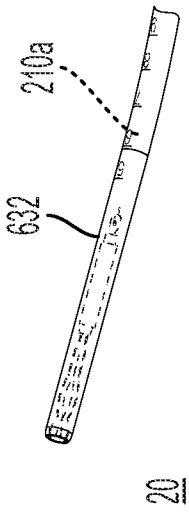

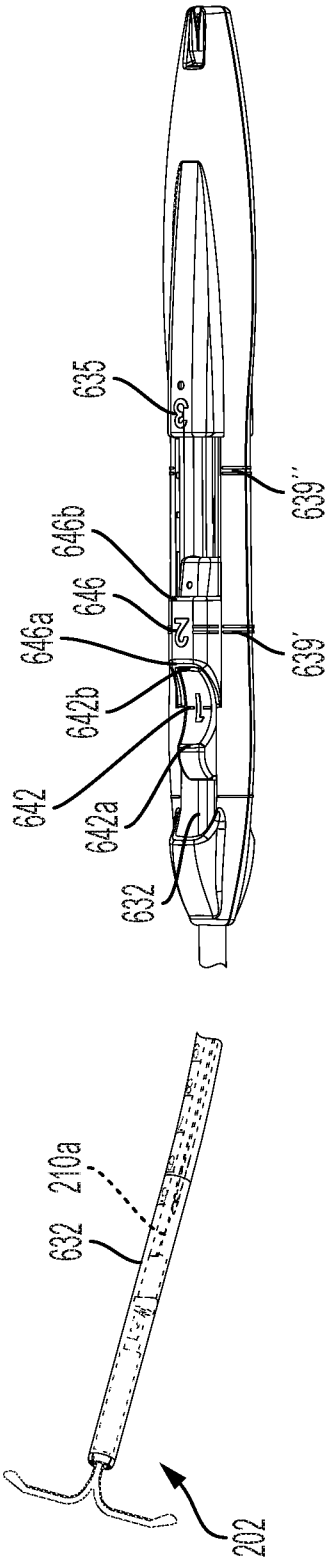

FIG. 17B

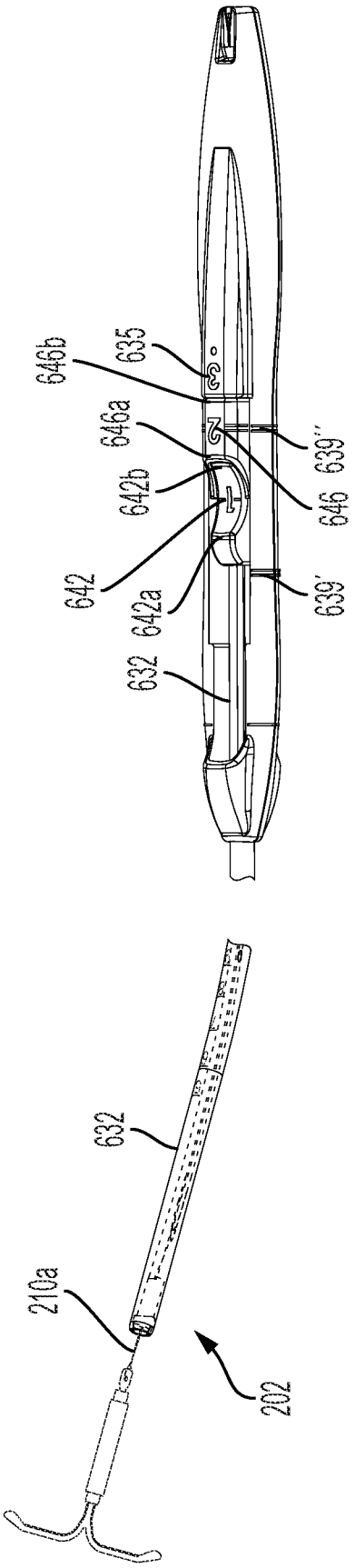

FIG. 17C

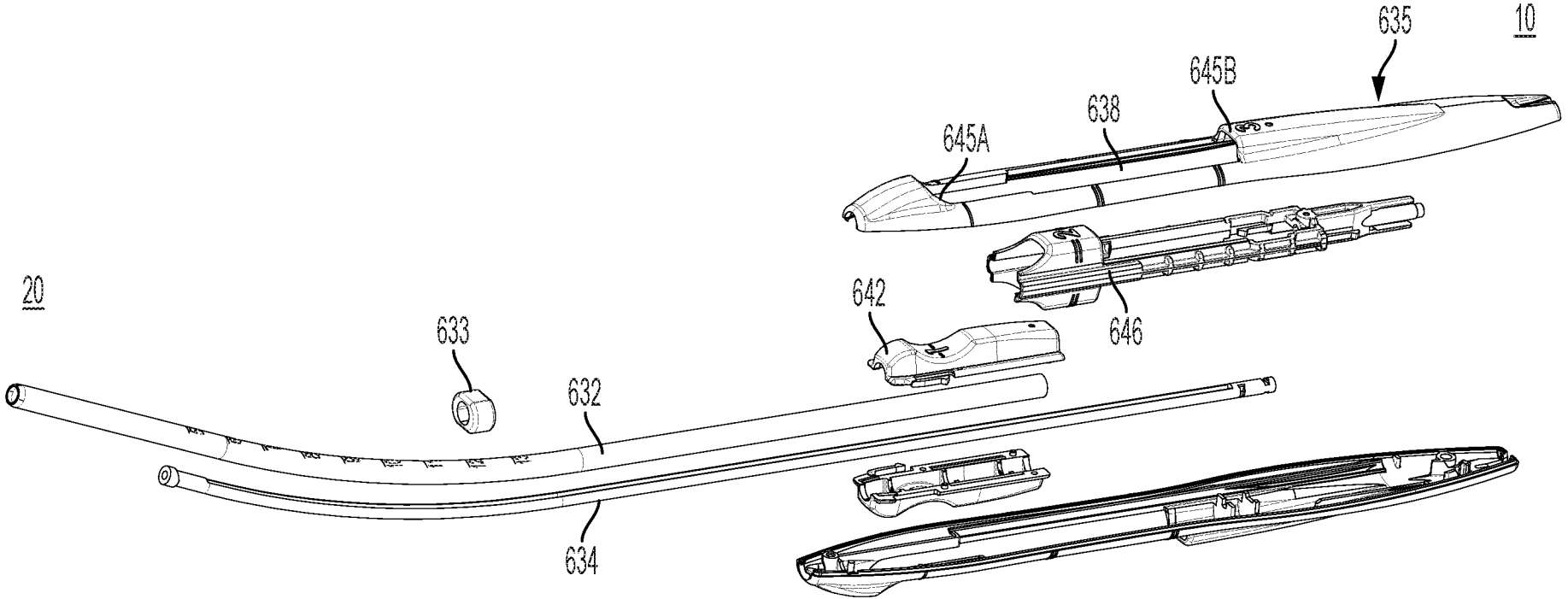

FIG. 6F