(12) INTERNATIONAL APPLICATION PUBLISHED UNDER THE PATENT COOPERATION TREATY (PCT)

(19) World Intellectual Property Organization
International Bureau

(43) International Publication Date
27 June 2013 (27.06.2013)

WIPO | PCT

(10) International Publication Number
WO 2013/096610 Al

(51) International Patent Classification:
A61B 19/00 (2006.01) *B25J 19/06* (2006.01)
B25J 9/06 (2006.01) *B25J 13/00* (2006.01)

(21) International Application Number:
PCT/US20 12/070924

(22) International Filing Date:
20 December 2012 (20. 12.2012)

(25) Filing Language: English

(26) Publication Language: English

(30) Priority Data:

61/578,582	2 1 December 201 1 (21. 12.201 1)	US
61/656,600	7 June 2012 (07.06.2012)	US
61/681,340	9 August 2012 (09.08.2012)	US

(72) Inventors; and
(71) Applicants : **OYOLA, Arnold E.** [US/US]; 405 Whitney Street, Northborough, Massachusetts 01532 (US). **AN¬ DERSON, Robert** [US/US]; 20 Homestead Farm Drive, Norwell, Massachusetts 0206 1 (US). **JOHNSTON, Gabri¬ el** [US/US]; 31 Meadow Drive, Raynham, Massachusetts 02767 (US). **DARISSE, Ian J.** [US/US]; Apt #3, 16 Montfern Ave, Brighton, Massachusetts 02135 (US). **STAND, Joseph A.** [US/US]; 273 Holden Street, Holden, Massachusetts 01520 (US). **BETTENCOURT, Luis** [US/US]; 119 Cathedral Drive, Attleboro, Massachusetts 02703 (US). **FRANGOLIS, Todd** [US/US]; 6 Hoe Shop Street, North Easton, Massachusetts 02356 (US). **FLAHERTY, J. Christopher** [US/US]; 2122 Kirkland Lake Drive, Auburndale, Florida 33823 (US).

(74) Agents: **ONELLO, Anthony P., Jr.** et al; Suite 203, Three Burlington Woods Drive, Burlington, Massachusetts 01803 (US).

(81) Designated States *(unless otherwise indicated, for every kind of national protection available):* AE, AG, AL, AM, AO, AT, AU, AZ, BA, BB, BG, BH, BN, BR, BW, BY, BZ, CA, CH, CL, CN, CO, CR, CU, CZ, DE, DK, DM, DO, DZ, EC, EE, EG, ES, FI, GB, GD, GE, GH, GM, GT, HN, HR, HU, ID, IL, IN, IS, JP, KE, KG, KM, KN, KP, KR, KZ, LA, LC, LK, LR, LS, LT, LU, LY, MA, MD, ME, MG, MK, MN, MW, MX, MY, MZ, NA, NG, NI, NO, NZ, OM, PA, PE, PG, PH, PL, PT, QA, RO, RS, RU, RW, SC, SD, SE, SG, SK, SL, SM, ST, SV, SY, TH, TJ, TM, TN, TR, TT, TZ, UA, UG, US, UZ, VC, VN, ZA, ZM, ZW.

(84) Designated States *(unless otherwise indicated, for every kind of regional protection available):* ARIPO (BW, GH, GM, KE, LR, LS, MW, MZ, NA, RW, SD, SL, SZ, TZ, UG, ZM, ZW), Eurasian (AM, AZ, BY, KG, KZ, RU, TJ, TM), European (AL, AT, BE, BG, CH, CY, CZ, DE, DK, EE, ES, FI, FR, GB, GR, HR, HU, IE, IS, IT, LT, LU, LV, MC, MK, MT, NL, NO, PL, PT, RO, RS, SE, SI, SK, SM, TR), OAPI (BF, BJ, CF, CG, CI, CM, GA, GN, GQ, GW, ML, MR, NE, SN, TD, TG).

Published:

— *with international search report (Art. 21(3))*

— *before the expiration of the time limit for amending the claims and to be republished in the event of receipt of amendments (Rule 48.2(h))*

WO 2013/096610 A1

(54) Title: STABILIZING APPARATUS FOR HIGHLY ARTICULATED PROBES WITH LINK ARRANGEMENT, METHODS OF FORMATION THEREOF, AND METHODS OF USE THEREOF

(57) Abstract: An apparatus for driving an articulating probe comprises an elongate probe constructed and arranged to articulate in at least one predetermined degree of motion and to transition from a flexible state to a rigid state, and a force transfer mechanism constructed and arranged to apply a force to the probe. The force is selected from the group consisting of a force that causes probe to articulate in the at least one predetermined degree of motion and a force that causes the probe to transition from the flexible state to the rigid state. The base structure is attached to portion of the force transfer mechamsm and the elongate probe; the base structure comprising one or more stabilizing elements constructed and arranged to resist undesired movement of the probe caused by force from the force transfer mechamsm.

STABILIZING APPARATUS FOR HIGHLY ARTICULATED PROBES WITH LINK ARRANGEMENT, METHODS OF FORMATION THEREOF, AND METHODS OF USE THEREOF

RELATED APPLICATIONS

This application claims the benefit of U.S. Provisional Application No. 61/578,582, filed December 21, 2011, the content of which is incorporated herein by reference in its entirety.

This application claims the benefit of U.S. Provisional Application No. 61/681,340, filed August 9, 2012, the content of which is incorporated herein by reference in its entirety.

This application claims the benefit of U.S. Provisional Application No. 61/656,600, filed June 7, 2012, the content of which is incorporated herein by reference in its entirety.

This application is related to PCT Application No PCT/US2011/060214, filed November 10, 2011, the content of which is incorporated herein by reference in its entirety.

This application is related to U.S. Provisional Application No. 61/412,733, filed November 11, 2010, the content of which is incorporated herein by reference in its entirety.

This application is related to PCT Application No PCT/US2012/054802, filed September 12, 2012, the content of which is incorporated herein by reference in its entirety.

This application is related to U.S. Provisional Application No. 61/534,032, filed September 13, 2011, the content of which is incorporated herein by reference in its entirety.

This application is related to PCT Application No PCT/US2012/032279, filed April 5, 2012, the content of which is incorporated herein by reference in its entirety.

This application is related to U.S. Provisional Application No. 61/472,344, filed April 6, 2011, the content of which is incorporated herein by reference in its entirety.

This application is related to PCT Application No PCT/US2012/040414, filed June 1, 2012, the content of which is incorporated herein by reference in its entirety.

This application is related to U.S. Provisional Application No. 61/492,578, filed June 2, 2011, the content of which is incorporated herein by reference in its entirety.

This application is related to PCT Application No PCT/US2011/057282, filed October 21, 2011, the content of which is incorporated herein by reference in its entirety.

This application is related to U.S. Provisional Application No. 61/406,032, filed October 22, 2010, the content of which is incorporated herein by reference in its entirety.

This application is related to PCT Application No PCT/US201 1/04481 1, filed July 21, 201 1, the content of which is incorporated herein by reference in its entirety.

This application is related to U.S. Provisional Application No. 61/368,257, filed July 28, 2010, the content of which is incorporated herein by reference in its entirety.

This application is related to U.S. Patent Application No. 11/630,279, filed December 20, 2006, published as U.S. Patent Application Publication No. 2009/0171 151, the content of which is incorporated herein by reference in its entirety.

TECHNICAL FIELD

Embodiments of the present inventive concepts relate generally to the field of robotics and, more particularly, to three-dimensional, flexible, steerable robotic devices, and methods of forming and controlling the same.

BACKGROUND

As less-invasive medical techniques and procedures become more widespread, medical professionals, such as surgeons, may employ snake-like robotic systems having highly articulated multi-link probes to access parts of the human anatomy that were otherwise difficult to reach. With the use of such robotic systems, medical professionals may be able to replace open-cavity surgical procedures with less invasive procedures.

Such articulating probes can be subject to significant forces in order to control or lock the linking mechanism, and subject the probe to undesired movements and adversely affect the performance of the articulating probe.

SUMMARY

Embodiments of the present inventive concepts may be directed to articulating robotic systems, robotic system user interfaces, human interface devices for controlling robotic systems and methods of controlling robotic systems.

In an aspect of inventive concepts, an apparatus for driving an articulating probe is provided, the apparatus including at least one elongate probe constructed and arranged to articulate in at least one predetermined degree of motion and to transition from a flexible state to a rigid state, a force transfer mechanism constructed and arranged to apply a force to

the at least one elongate probe. The force is selected from the group consisting of a force that causes the at least one elongate probe to articulate in the at least one predetermined degree of motion and a force that causes the at least one elongate probe to transition from the flexible state to the rigid state. The base structure is attached to at least a portion of the force transfer mechanism and the at least one elongate probe; the base structure including one or more stabilizing elements constructed and arranged to resist undesired movement of the at least one elongate probe caused by force from the force transfer mechanism.

In an embodiment, the at least one of the stabilizing elements is constructed and arranged to resist twisting of the base structure.

In an embodiment, the at least one of the stabilizing elements is constructed and arranged to resist flexing of the base structure.

In an embodiment, the at least one of the stabilizing elements is constructed and arranged to resist compression of the base structure.

In an embodiment, the at least one of the stabilizing elements is constructed and arranged to resist stretching of the base structure.

In an embodiment, at least one of the stabilizing elements is constructed and arranged to resist lengthening of the base structure.

In an embodiment, the base structure includes a housing and wherein at least one of the stabilizing elements includes a rib connected to the housing.

In an embodiment, the base structure includes a housing including a first portion and a thicker second portion and wherein the stabilizing element includes the thicker second portion.

In an embodiment, the one or more stabilizing elements includes a force distribution plate.

In an embodiment, the base structure includes a plastic housing and wherein the force distribution plate is a metal plate attached to the plastic housing.

In an embodiment, the force transfer mechanism includes at least one cable and at least one bobbin, wherein applying a force to the at least one elongate probe includes rotating the at least one bobbin, and wherein the at least one bobbin is attached to and stabilized by the force distribution plate.

In an embodiment, the force transfer mechanism further includes at least two cables and at least two corresponding bobbins, wherein applying a force to the at least one elongate

probe further includes rotating the at least two bobbins, and wherein the at least two bobbins are attached to the force distribution plate.

In an embodiment, the force transfer mechanism further includes at least three cables and at least three bobbins, wherein applying a force to the at least one elongate probe further includes rotating the at least three bobbins, and wherein the at least three bobbins is attached to the force distribution plate.

In an embodiment, the force transfer mechanism includes at least one cable, at least one bobbin and at least one cart, wherein applying a force to the at least one elongate probe includes rotating the at least one bobbin, wherein the at least one cart is constructed and arranged to advance and retract the at least one elongate probe, and wherein the at least one bobbin and the at least one cart are attached to the force distribution plate.

In an embodiment, the force transfer mechanism includes at least one gear, wherein advancing or retracting the at least one elongate probe includes rotating the at least one gear.

In an embodiment, the at least one gear includes at least one lead screw for driving an at least one cart, wherein the at least one cart is movably mounted on the at least one lead screw.

In an embodiment, the base structure includes a first portion operably attachable to a second portion, and wherein the at least one stabilizing element includes at least one projection extending from the first portion and at least one recess positioned in the second portion to receive the at least one projection.

In an embodiment, the at least one projection includes a tongue plate and the at least one recess includes a slot for receiving the tongue plate.

In an embodiment, the base structure includes a first portion, a second portion, and the at least one stabilizing element includes a latching assembly for operably attaching the first portion to the second portion. In an embodiment, the latching assembly is spring-loaded.

In an embodiment, the apparatus further includes at least one cart attached to the at least one elongate probe, wherein the at least one cart includes a first cart that is constructed and arranged to advance and retract the elongate probe, and wherein the at least one stabilizing element includes an elongate guide fixture constructed and arranged to slidingly guide the first cart. In an embodiment, the apparatus further includes a second elongate probe and a second cart attached to the second elongate probe, wherein the second cart is constructed and arranged to advance and retract the second elongate probe, and wherein the

stabilizing element further includes a second guide fixture constructed and arranged to slidingly guide the second cart.

In an embodiment, the second guide fixture is a rail. In an embodiment, the second guide fixture is a solid cylindrical metal rail. In an embodiment, the second guide fixture includes an elongate slot that receives and communicates with an at least one of a corresponding male fixture of at least one of the first and the second carts.

In an embodiment, the force that causes the at least one elongate probe to transition from the flexible state to the rigid state includes a force of at least 1 pound.

In an embodiment, the force that causes the at least one elongate probe to transition from the flexible state to the rigid state includes a force of at least 10 pounds.

In an embodiment, the force that causes the at least one elongate probe to transition from the flexible state to the rigid state includes a force of at least 20 pounds.

In an embodiment, the force that causes the at least one elongate probe to transition from the flexible state to the rigid state includes a force of approximately 30 pounds.

In an embodiment, the force transfer mechanism includes at least one cable constructed and arranged to transmit a force that causes the at least one elongate probe to transition from the flexible state to the rigid state.

In an embodiment, the force transfer mechanism includes at least two cables constructed and arranged to collectively transmit a force that causes the at least one elongate probe to transition from the flexible state to the rigid state.

In an embodiment, the at least two cables are further constructed and arranged to transmit the articulating force to articulate the at least one elongate probe.

In an embodiment, the force transfer mechanism includes at least three cables constructed and arranged to collectively transmit a force that causes the at least one elongate probe to transition from the flexible state to the rigid state. In an embodiment, the at least three cables are further constructed and arranged to transmit the articulating force to articulate the at least one elongate probe.

In an embodiment, the at least one elongate probe includes a first probe arm and a second probe arm, the first probe arm enclosing the second probe arm, wherein the articulation mechanism is constructed and arranged to drive the first and second probe arms longitudinally with respect to each other and wherein the force transfer mechanism includes a locking mechanism to independently lock or release each of the first and second probe arms in states of flexibility and rigidity in the flexible state or the rigid state.

In an embodiment, the at least one elongate probe includes a steerable distal end. In an embodiment, the at least one predetermined degree of motion includes three degrees of motion about which the steerable distal end can be steered.

In an embodiment, the base structure includes a feeding structure through which the at least one elongate probe is fed from the base structure.

In an embodiment, the feeding structure includes at least one slidable actuating carriage constructed and arranged to advance and retract the at least one elongate probe.

In an embodiment, the one or more stabilizing elements include at least two rails on which the at least one slidable actuating carriage slides, the at least two rails constructed and arranged to substantially prevent movement of the at least one slideable actuating carriage and cables in directions other than predetermined motion along the longitudinal axis of the at least two rails.

In an embodiment, the at least two rails includes two spaced apart and parallel rails constructed and arranged to substantially prevent twisting or bending of the base structure. In an embodiment, the at least two rails are solid. In an embodiment, the at least two rails are hollow.

In an embodiment, the at least one slideable actuating carriage includes first and second slidable actuating carriages to respectively advance first and second probe arms of the articulating probe, the second probe arm slidable within the first probe arm.

In an embodiment, the first probe includes a plurality of inner links and the second probe includes a plurality of outer links, wherein the inner and outer links articulate with respect to each other.

In an embodiment, the feeding structure includes at least one elongate lead screw arranged to be rotated so as to drive actuation of the at least one slidable actuating carriage.

In an embodiment, the at least one elongate lead screw includes two parallel and spaced apart lead screws arranged to substantially prevent twisting or bending of the base structure.

In an embodiment, the stabilizing elements include at least one metal mounting plate to which the at least one elongate lead screw is mounted so as to minimize non-linear movement of the slidable carriages with respect to the feeding structure.

In an embodiment, the at least one slidable actuating carriage includes Teflon-coated bushings arranged to substantially prevent movement of the actuating carriage in directions

other than predetermined motion along the longitudinal axis of the at least one elongate lead screws.

In an embodiment, the force transfer mechanism includes at least one gear connecting the feeding structure to drive the articulating probe and wherein the stabilizing elements include helical threads on the at least one gear to increase the connective area between the base structure and the feeding structure.

In an embodiment, the force transfer mechanism includes at least two cables housed within the feeding structure and arranged to steer a distal end of the at least one elongate probe.

In an embodiment, the at least two cables includes three cables arranged to steer a distal end of the at least one elongate probe in three degrees of freedom.

In an embodiment, the at least two cables are arranged to drive the locking mechanism.

In an embodiment, all of the force transfer mechanism located within the feeding structure includes a sub-assembly constructed independently from the feeding structure.

In an embodiment, the feeding structure is secured to the sub-assembly so as to increase the rigidity of the sub-assembly during articulation of the at least one elongate probe.

In an embodiment, the force transfer mechanism includes at least one rotatable bobbin housed within the feeding structure to drive articulation of the at least one probe arm.

In an embodiment, the at least one rotatable bobbin drives articulation of the at least two cables.

In an embodiment, the bobbins are mounted to a mounting plate, the mounting plate further mounted to the sub-assembly.

In an embodiment, the sub-assembly further includes the at least one slidable actuating carriage, the at least two rails, and the at least one elongate lead screw.

In an embodiment, the feeding structure is a detachable portion of the base structure, wherein an interface between the feeding structure and non-detachable portion of the base structure includes at least one alignment feature that aligns the feeding structure with the base structure.

In an embodiment, the alignment features include at least one protrusion of the interface to fixedly engage with at least one alignment slot of the interface.

In an embodiment, the at least one alignment feature includes at least two slots of the interface to interface with at least two alignment pegs of the interface.

In an embodiment, the at least one protrusion includes a vertically oriented alignment plate.

In an embodiment, the vertically oriented alignment plate extends across at least one half of a width of the feeding structure.

In an embodiment, the at least one alignment feature includes two or more ball plungers arranged to engage with the vertically oriented alignment plate so as to further align the vertically oriented alignment plate within an at least one alignment slot and reduce motion of the alignment plate within the at least one alignment slot.

In an embodiment, the two or more ball plungers are arranged to prevent improper orientation of the alignment plate within the at least one alignment slot.

In an embodiment, the alignment plate includes an alignment rib on a face of the alignment plate so as to reduce sliding of the alignment plate across the length of the alignment slot.

In an embodiment, the alignment plate includes a tongue slot at the proximal end of the alignment plate, the tongue slot arranged to engage and interlock with an articulating tongue when the articulating tongue engages with the tongue slot, the articulating tongue attached to the non-detachable portion of the base structure.

In an embodiment, the interface includes at least two protrusions and two slots arranged to interface with each other upon connecting the feeding structure with the non-detachable portion of the base structure, wherein a first protrusion and a second protrusion are horizontally separated from each other by at least a half of the horizontal maximum length of the support structure in order to substantially align the base unit and support structure and prevent a rotating yaw of the support structure.

In an embodiment, the interface includes at least two protrusions and two slots arranged to interface with each other upon connecting the feeding structure to the base structure, wherein the first and second protrusions are located directly about two sides of a first electrical connector in the interface, the first and second protrusions arranged to mate with first and second slots in the interface, the first electrical connector arranged to mate with a second electrical connector located in the interface.

In an embodiment, the first and second protrusions are tapered to provide fine alignment of the first and second electrical connectors with each other.

In an embodiment, the interface includes one or more horizontally oriented spring-loaded slots and one or more corresponding horizontally oriented pins arranged to engage the spring-loaded slots upon connecting the feeding structure to the base structure.

In an embodiment, a portion of the force transfer mechanism secured within the base structure is driven by at least one force-generating unit.

In an embodiment, the at least one force generating unit includes a motor. In an embodiment, the motor generates force through at least one of a solenoid, valve, cylinder, hydraulic, and pneumatic.

In an embodiment, the at least one force-generating unit is housed outside of the detachable feeding structure.

In an embodiment, the base structure includes a base plate, the base plate including a stand connecting interface for mounting the base structure to a stand structure, wherein the stand connecting interface is integrated within the base plate of the base structure.

In an embodiment, the stand connecting interface is electrically isolated from the rest of the base unit.

In an embodiment, the stand connecting interface includes at least one of plastic spacers, a key hole slotted plastic isolation plate, and insulated standoffs in order to electrically isolate the stand interface from the rest of the base unit.

In an embodiment, the at least one or more stabilizing elements includes one or more vertically oriented posts extending between the ground connecting interface and a chassis of the base structure.

In an embodiment, the vertically oriented posts are constructed of solid metal.

In an embodiment, the vertically oriented posts extend from a plate in the chassis.

In an embodiment, the base structure includes a Faraday cage connecting a chassis of the base structure so as to prevent undesired electrical interference from external sources and emission to other electrical devices.

In an embodiment, the apparatus includes an introducer conduit attached to the base structure, the introducer conduit arranged to guide the at least one probe arm along a predetermined path.

In an embodiment, the introducer conduit is fastened to a bearing block securing the at least one lead screw so as to align the introducer conduit with the at least one slidable carriage.

In an embodiment, the at least one force translating unit is arranged to translate at least about thirty pounds of force while the at least one or more stabilizing elements substantially limits motion of the at least one probe arm to the driven at least one predetermined degree of motion.

In an aspect of inventive concepts, the apparatus includes at least one elongate probe arm constructed and arranged to articulate in at least one predetermined degree of motion, an articulation mechanism constructed and arranged to drive the articulation of the at least one probe arm in the at least one predetermined degree of motion, a base structure arranged to remain stationary with respect to the articulation mechanism of the at least one elongate probe arm and to fixedly secure at least a portion of the articulation mechanism, the base structure including a support structure extending the articulation mechanism from the base structure to the at least one elongate probe arm, the support structure arranged to substantially limit motion of the at least one probe arm to the driven at least one predetermined degree of motion, wherein the at least one probe arm includes a first probe arm and a second probe arm, the first probe arm enclosing the second probe arm, wherein the articulation mechanism is constructed and arranged to drive the first and second probe arms longitudinally with respect to each other, and wherein the articulation mechanism includes a locking mechanism to independently lock or release each of the first and second probe arms in states of rigidity and flexibility, respectively.

In an embodiment, the probe arm includes a steerable distal end.

In an embodiment, the at least one degree of motion includes three degrees of motion about which the steerable distal end can be steered.

In an embodiment, the at least one probe arm includes a proximate end and wherein the base structure includes a feeding conduit through which the at least one probe arm is fed from the base structure.

In an embodiment, the feeding conduit includes at least one slidable actuating carriage arranged within the feeding conduit to advance and retract the at least one probe arm.

In an embodiment, the at least one actuating carriage includes first and second slidable actuating carriages to advance first and second probe arms of the at least one probe arm, the second probe arm slidable within the first probe arm.

In an embodiment, the feeding conduit includes at least two rails on which the at least one slidable actuating carriage slides, the at least two rails constructed and arranged to

substantially prevent movement of the actuating carriage and cables in directions other than predetermined motion along the longitudinal axis of the rails.

In an embodiment, the at least two rails are parallel and spaced apart so as to substantially prevent twisting or bending of the base unit.

In an embodiment, the rails include slots arranged to guide sliding of the slidable carriages.

In an embodiment, the rails are cylindrical.

In an embodiment, the feeding conduit includes at least one elongate lead screw arranged to be rotated so as to drive actuation of the at least one slidable actuating carriage.

In an embodiment, the at least one elongate lead screws includes two lead screws.

In an embodiment, the at least one elongate lead screws is mounted to the feeding conduit with at least one metal plate so as to minimize non-linear movement of the slidable carriages with respect to the feeding conduit.

In an embodiment, the slidable actuating carriages include Teflon-coated bushings arranged to engage the at least one elongate lead screws.

In an embodiment, the at least one lead screws is supported by at least one bearing having a bearing block affixed to the feeding conduit so as to substantially prevent movement of the at least one elongated lead screw other than the rotation for driving actuation of the at least on slidable actuation carriage.

In an embodiment, the at least one bearing is a thrust bearing.

In an embodiment, the at least one elongated lead screw is supported by at least one spherical bearing so as to self align the lead screw with a bearing block securing the lead screw and substantially preventing movement of the at least one elongated lead screw other than the rotation for driving actuation of the at least on slidable actuation carriage.

In an embodiment, the at least one spherical bearing is located at the distal end of the lead screw and the thrust bearing is located at the proximal end of the lead screw.

In an embodiment, the articulation mechanism includes at least one helical gear to drive the articulation mechanism and to increase the connective area between the support structure and the portion of the articulation mechanism fixedly secured to the base unit.

In an embodiment, the at least one helical gear drives actuation of the at least one elongate lead screw.

In an embodiment, the articulation mechanism includes at least two cables housed within the feeding conduit and arranged to articulate the at least one probe arm.

In an embodiment, the articulation mechanism includes at least two cables housed within the feeding conduit and arranged to steer a distal end of the at least one probe arm.

In an embodiment, the at least two cables includes three cables arranged to steer a distal end of the at least one probe arm in three degrees of motion.

In an embodiment, the at least two cables are arranged to drive the locking mechanism.

In an embodiment, a portion of the articulation mechanism not secured within the base unit includes a sub-assembly constructed independently from the feeding conduit.

In an embodiment, the feeding conduit is secured to the sub-assembly so as to increase the rigidity of the sub-assembly during articulation.

In an embodiment, the articulation mechanism includes at least one rotatable bobbin housed within the feeding unit to drive articulation of the at least one probe arm.

In an embodiment, the at least one rotatable bobbin drives articulation of the at least two cables.

In an embodiment, the bobbins are mounted to a mounting plate, the mounting plate further mounted to the sub-assembly.

In an embodiment, the sub-assembly further includes the at least one slidable actuating carriage, the at least two rails, and the at least one elongate lead screw.

In an embodiment, the mounting plate includes alignment features that align the mounting plate with the base unit.

In an embodiment, the alignment features includes at least one slot constructed to fixedly engage with at least one protrusion of the base unit.

In an embodiment, the at least one protrusion of the base unit includes two or more alignment pegs.

In an embodiment, the alignment features include at least one protrusion constructed to fixedly engage with at least one slot of the base unit.

In an embodiment, the at least one protrusion includes an alignment plate substantially orthogonal to the mounting plate.

In an embodiment, the alignment plate extends across at least one half of a width of the mounting plate.

In an embodiment, the at least one alignment slot includes ball plungers arranged to engage with the alignment plate so as to further align the alignment plate within the at least

one alignment slot and reduce motion of the alignment plate within the at least one alignment slot.

In an embodiment, the ball plungers are arranged to prevent improper orientation of the alignment plate within the at least one alignment slot.

In an embodiment, the alignment plate includes an alignment rib on a face of the alignment plate so as to reduce sliding of the alignment plate across the length of the alignment slot.

In an embodiment, the alignment plate includes a tongue slot at the proximal end of the alignment plate, the tongue slot arranged to engage and interlock with an articulating tongue when the articulating tongue engages with the tongue slot, the articulating tongue attached to the base unit so as to substantially prevent a rotating pitch of the support structure.

In an embodiment, the portion of the articulation mechanism includes at least one force-generating unit and wherein the support structure includes at least one force translating unit driven by the at least one force-generating unit.

In an embodiment, the at least one force generating unit includes a motor.

In an embodiment, the motor generates force through at least one of a solenoid, valve, cylinder, hydraulic, and pneumatic.

In an embodiment, the at least one force translating unit is arranged to translate at least about thirty pounds of force while the support structure substantially limits motion of the at least one probe arm to the driven at least one predetermined degree of motion.

In an embodiment, the base structure includes a feeding structure separable from the base structure and a mounting interface for connecting the base structure and feeding structure together.

In an embodiment, the mounting interface includes at least two protrusions and two slots arranged to interface with each other upon connecting the base structure with the feeding structure, wherein a first protrusion and a second protrusion are horizontally separated from each other by at least a half of the horizontal maximum length of the feeding in order to substantially align the base structure and feeding structure and prevent a rotating yaw of the base structure.

In an embodiment, the first and second protrusions are located about two sides of a first electrical connector in the mounting interface, the first and second protrusions arranged to mate with first and second slots in the mounting interface, the first electrical connector arranged to mate with a second electrical connector located in the mounting interface.

In an embodiment, the first and second protrusions are tapered to provide fine alignment of the first and second electrical connectors with each other.

In an embodiment, the mounting interface includes one or more horizontally oriented spring-loaded slots and one or more corresponding horizontally oriented pins arranged to engage the spring-loaded slots upon connecting the base structure with the feeding structure.

In an embodiment, the base structure includes a ground connecting interface for mounting the base structure to a ground-fixed structure.

In an embodiment, the ground connecting interface is integrated within a plate of the base unit. In an embodiment, the ground connecting interface is electrically isolated from the rest of the base unit.

In an embodiment, the ground connecting interface includes at least one of plastic spacers, a key hole slotted plastic isolation plate, and insulated standoffs in order to electrically isolate the stand interface from the rest of the base unit. In an embodiment, the support structure includes one or more vertically oriented beams extending between the ground connecting interface and a chassis of the base structure. In an embodiment, the vertically oriented beams are constructed of solid metal.

In an embodiment, the vertically oriented beams extend from a plate.

In an embodiment, the base structure includes a Faraday cage connecting a chassis of the base structure with the ground connecting interface so as to prevent undesired electrical interference from external sources and emission to other electrical devices.

In an embodiment, the apparatus further including an introducer conduit attached to the base structure, the introducer conduit arranged to guide the at least one probe arm along a predetermined path. In an embodiment, the introducer conduit is fastened to the at least one metal plate the at least one lead screw so as to align the introducer conduit with the at least one slidable carriage.

In an aspect of inventive concepts, a method includes providing at least one elongate probe constructed and arranged to articulate in at least one predetermined degree of motion and to transition from a flexible state to a rigid state, providing a force transfer mechanism constructed and arranged to apply a force to the at least one elongate probe, said force selected from the group consisting of a force constructed and arranged to cause the at least one elongate probe to articulate in the at least one predetermined degree of motion and a force constructed and arranged to cause the at least one elongate probe to transition from the flexible state to the rigid state. The method further includes providing a base structure

attached to at least a portion of the force transfer mechanism and the at least one elongate probe, the base structure including one or more stabilizing elements constructed and arranged to resist undesired movement of the elongate probe caused by force from the force transfer mechanism. The method further includes articulating the at least one elongate probe with the force transfer mechanism by placing a first probe of the at least one elongate probe in a flexible state, articulating the first probe in a predetermined direction, placing the first probe in a state of rigidity, placing a second probe of the at least one elongate probe in a flexible state, and advancing the second probe in the predetermined direction relative to the first probe.

BRIEF DESCRIPTION OF THE DRAWINGS

The foregoing and other objects, features and advantages of embodiments of the present inventive concepts will be apparent from the more particular description of embodiments, as illustrated in the accompanying drawings in which like reference characters refer to the same elements throughout the different views. The drawings are not necessarily to scale, emphasis instead being placed upon illustrating the principles of the embodiments.

FIG. 1A is a perspective illustrative view of an articulating probe system according to an embodiment of inventive concepts.

FIG. IB is a perspective illustrative view of an articulating probe arm according to an embodiment of inventive concepts.

FIG. 1C is a perspective illustrative view of probe tools which can be integrated with an articulating probe arm according to an embodiment of inventive concepts.

FIG. 2A is an exploded design schematic of a detachable feeder system for an articulating probe arm according to an embodiment of inventive concepts.

FIG. 2B is an illustrative internal view of a feeder system according to an embodiment of inventive concepts.

FIG. 3A is an illustrative perspective view of a force-transfer driving assembly of a feeder system according to an embodiment of inventive concepts.

FIG. 3B is a design schematic of a force-transfer driving subassembly of a feeder system according to an embodiment of inventive concepts.

FIG. 3C is an illustrative side-perspective view of a ninety-degree gear transfer subassembly of the force-transfer driving assembly of FIG. 3B.

FIG. 3D is another illustrative perspective view of a force-transfer driving assembly of FIG. 3B.

FIG. 3E is an illustrative perspective view of a bearing mounting block for a lead screw of the force-transfer driving assembly of FIGs. 3A-3B according to an embodiment of inventive concepts.

FIG. 3F is an illustrative perspective view of a bearing mounting block for a lead screw of the force-transfer driving assembly of FIGs. 3A-3B according to an embodiment of inventive concepts.

FIG. 4A is an illustrative internal perspective view of the feeder system of FIG. 2B according to an embodiment of inventive concepts.

FIG. 4B is an illustrative external perspective view of the feeder system of FIG. 4A according to an embodiment of inventive concepts.

FIG. 4C is an illustrative perspective view of an introducer assembly according to an embodiment of inventive concepts.

FIG. 5A is an illustrative top view of a stabilizing plate for a force-transfer driving assembly of a feeder system according to an embodiment of inventive concepts.

FIG. 5B is a perspective view of the stabilizing plate of FIG. 5A.

FIG. 5C is a perspective partial view of the stabilizing plate of FIG. 5A integrated within a feeder assembly according to an embodiment of inventive concepts.

FIG. 5D is an illustrative view of a bobbin and cable feeding mechanism arranged with the stabilization plate of FIG. 5A.

FIG. 6 is a top illustrative view of an elongate stabilizing plate integrated within a feeder assembly according to an embodiment of inventive concepts.

FIG. 7A is an illustrative perspective view of a base unit of a force-transfer driving assembly according to an embodiment of inventive concepts.

FIG. 7B is an illustrative partial perspective view of the base unit of FIG. 7A.

FIG. 8 is an illustrative cross-sectional view of a base unit of a force-transfer driving assembly according to an embodiment of inventive concepts.

FIG. 9 is a lower perspective view of a base unit of a force-transfer driving assembly according to an embodiment of inventive concepts.

FIG. 10 is an illustrative perspective view of a mounting plate for the base unit of a force-transfer driving assembly according to an embodiment of inventive concepts.

FIGs. 11A - llC are graphic demonstrations of a highly articulated probe device, according to embodiments of the present inventive concepts.

DETAILED. DESCRIPTION OF EMBODIMENTS

The terminology used herein is for the purpose of describing particular embodiments and is not intended to be limiting of the inventive concepts. As used herein, the singular forms "a," "an" and "the" are intended to include the plural forms as well, unless the context clearly indicates otherwise. It will be further understood that the terms "comprises," "comprising," "includes" and/or "including," when used herein, specify the presence of stated features, integers, steps, operations, elements, and/or components, but do not preclude the presence or addition of one or more other features, integers, steps, operations, elements, components, and/or groups thereof.

It will be understood that, although the terms first, second, third etc. may be used herein to describe various limitations, elements, components, regions, layers and/or sections, these limitations, elements, components, regions, layers and/or sections should not be limited by these terms. These terms are only used to distinguish one limitation, element, component, region, layer or section from another limitation, element, component, region, layer or section. Thus, a first limitation, element, component, region, layer or section discussed below could be termed a second limitation, element, component, region, layer or section without departing from the teachings of the present application.

It will be further understood that when an element is referred to as being "on" or "connected" or "coupled" to another element, it can be directly on or above, or connected or coupled to, the other element or intervening elements can be present. In contrast, when an element is referred to as being "directly on" or "directly connected" or "directly coupled" to another element, there are no intervening elements present. Other words used to describe the relationship between elements should be interpreted in a like fashion (e.g., "between" versus "directly between," "adjacent" versus "directly adjacent," etc.). When an element is referred to herein as being "over" another element, it can be over or under the other element, and either directly coupled to the other element, or intervening elements may be present, or the elements may be spaced apart by a void or gap. There are numerous types of steerable multi-linked, highly articulated probes. Robert Sturges' U.S. Patent No. 5,759,151, which is hereby incorporated by reference in its entirety, discloses a flexible, steerable device for conducting exploratory procedures. The device includes at least one spine, each having stiffening means

for selectively rendering the spine rigid and flexible along its length. A flexible sheath surrounds the spine and is axially slidably moveable relative to the spine so that the sheath will follow and conform to the shape of a spine in the rigid state and resist further flexure when the spine is in a relaxed state. A steerable distal tip is provided on the distal end of the device. Controls for the distal tip are mounted on the proximal end of the device. Mechanisms are provided on the distal end of the device for selectively activating and deactivating the stiffening means of the spine. An instrument conduit may be mounted on the sheath. Howard Choset's U.S. Patent Application Serial No. 11/630,279, which is hereby incorporated by reference in its entirety, discloses a feeder mechanism for advancing and retracting both an inner core and an outer sleeve, as well as selectively applying tension to control cables used for steering and causing either the inner core or outer sleeve to transition between a rigid state and a limp state.

FIGs. 11A - llC are graphic demonstrations of a highly articulated probe device, according to embodiments of the present inventive concepts. A highly articulated robotic probe 10, according to the embodiment shown in FIGs. 11A - 11C, comprises essentially two concentric mechanisms, an outer mechanism and an inner mechanism, each of which can be viewed as a steerable mechanism. FIGS. 11A - 11C show the concept of how different embodiments of the probe 10 operate. Referring to FIG. 11A, the inner mechanism can be referred to as a first mechanism, an inner core or inner core mechanism 12. The outer mechanism can be referred to as a second mechanism, an outer sleeve or outer sleeve mechanism 14. Each mechanism can alternate between being rigid and limp. In the rigid mode or state, the mechanism is just that - rigid. In the limp mode or state, the mechanism is highly flexible and thus either assumes the shape of its surroundings or can be re-shaped. It should be noted that the term "limp" as used herein does not necessarily denote a structure that passively assumes a particular configuration dependent upon gravity and the shape of its environment; rather, the "limp" structures described in this application are capable of assuming positions and configurations that are desired by the operator of the device, and therefore are articulated and controlled rather than flaccid and passive.

In some embodiments, one mechanism starts limp and the other starts rigid. For the sake of explanation, assume the outer sleeve 14 is rigid and the inner core 12 is limp, as seen in step 1 in FIG. 11A. Now, the inner core 12 is both pushed forward by a feeding mechanism 16, described below, and its "head" or distal end is steered, as seen in step 2 in

FIG. 11A. Now, the inner core 12 is made rigid and the outer sleeve 14 is made limp. The outer sleeve 14 is then pushed forward until it catches up or is coextensive with the inner core 12, as seen in step 3 in FIG. 11A. Now, the outer sleeve 14 is made rigid, the inner core 12 limp, and the procedure then repeats. One variation of this approach is to have the outer sleeve 14 be steerable as well. The operation of such a device is illustrated in FIG. 1IB. In FIG. 1IB it is seen that each mechanism is capable of catching up to the other and then advancing one link beyond. According to one embodiment, the outer sleeve 14 is steerable and the inner core 12 is not. The operation of such a device is shown in FIG. 11C.

In medical applications, once the probe 10 arrives at a desired location, the operator, typically a surgeon, can slide one or more tools through one or more working channels of outer sleeve 14, inner core 12, or one or more working channels formed between outer sleeve 14 and inner core 12, such as to perform various diagnostic and/or therapeutic procedures. In some embodiments, the channel is referred to as a working channel that can, for example, extend between first recesses formed in a system of outer links and second recesses formed in a system of inner links. Working channels may be included on the periphery of probe 10, such as working channels comprising one or more radial projections extending from outer sleeve 14, these projections including one or more holes sized to slidingly receive one or more tools.

In addition to clinical procedures such as surgery, probe 10 can be used in numerous applications including but not limited to: engine inspection, repair or retrofitting; tank inspection and repair; spying and surveillance applications; bomb disarming; inspection or repair in tightly confined spaces such as submarine compartments or nuclear weapons; structural inspections such as building inspections; hazardous waste remediation; biological sample recovery such as anthrax recovery; and combination of these. Clearly, the device of the present disclosure has a wide variety of applications and should not be taken as being limited to any particular application.

Inner core 12 and/or outer sleeve 14 are steerable and inner core 12 and outer sleeve 14 can each be made both rigid and limp, allowing probe 10 to drive anywhere in three-dimensions while being self-supporting. Probe 10 can "remember" each of its previous configurations and for this reason, probe 10 can retract from and/or retrace to anywhere in a three dimensional volume such as the intracavity spaces in the body of a patient such as a human patient.

Particularly when the links are made rigid by the cables after having been steered, the significant forces applied to the links through the cables will act upon, or act with respect to, the base structure of the robot driving mechanism. These forces can potentially induce unpredictable and otherwise undesired movement between the base structure of the robot and the robot arm, particularly its distal end, and the various components therein. Where precise control of motion and/or stability of the robot is desired, it is imperative to resist these forces to avoid such undesired movement.

FIG. 1A is a perspective illustrative view of an articulating probe system 100 according to an embodiment of inventive concepts. In an embodiment, a patient table 110 is integrated with an adjustable base stand 120 to which an articulating robot probe 175 is connected, typically through a rotatable, removable connection. The articulating robot probe 175 includes probe arm 315, typically a link assembly including a plurality of inner and outer links as described in reference to Figs. 11A - 11C. Robot probe 175 is operably connected to a console system 150 configured for driving probe arm 315, such connection typically including electrical wires or optical fibers for transmission of power and/or data, or mechanical transmission conduits such as mechanical linkages or pneumatic/hydraulic delivery tubes. The articulating robot probe 175 includes a feeder assembly 300 that feeds an articulating robot probe arm such as is described above in reference to FIGs. 11A - 11C. In an embodiment, the feeder assembly 300 is a detachable component that connects with a base unit 200, such as base unit 200 described in reference to Fig. 7A. In other embodiments, the feeder assembly 300 and the base unit 200 are a unitary structure not designed to be readily detachable. In other embodiments, various components of the system such as, for example, the feeder assembly 300 is detachable and replaceable.

FIG. IB is a perspective illustrative view of the distal end of articulating probe 175 according to an embodiment of inventive concepts. In an embodiment, a probe arm 315, such as a link assembly including a plurality of inner and outer links as described in reference to Figs. 11A - l lC, includes a distal end 115 with a plurality of working channels 117. As described previously herein the working channels can support a variety of tools including, for example, cameras, light sources, and surgical tools such as cutters, graspers, scissors, energy appliers, suturing assemblies, biopsy removal elements, etc. Tools may be slidingly received by the working channels 117 or they may be fixedly inserted in a working channel 117, such as during a manufacturing process. **FIG. 1C** is a perspective illustrative view of probe tools 125 which can be integrated with an articulating probe arm according to an embodiment of

inventive concepts. Probe tools 125 include an elongate conduit 127 which may be integrated with and extend through one of the working channels 117, for example, working channels 117 located within or mounted to the periphery of probe arm 315. In an embodiment, probe tools 125 include hand-operable controls 128 such as, for example, controls operably connected to one or more sharp surfaces positioned on the distal end of conduit 127, such as for cutting tissue with a tool extending through working channel 117.

FIG. 2A is an exploded design schematic of a detachable feeder system 300 for an articulating probe, such as articulating probe 175 of FIGs. 1A - 1C, according to an embodiment of inventive concepts. **FIG. 2B** is an illustrative internal view of a feeder system according to an embodiment of inventive concepts. In an embodiment, the feeder system 300 includes a housing 360 having a stabilization plate 370, to which cable bobbins 380 are mounted. Housing 360 is typically an injection molded, plastic housing, such as a reinforced plastic housing. In an embodiment, the stabilization plate 370 is mounted to housing 360 proximate reinforced housing ribs 362. In an embodiment, cables 382 extend through a probe arm 315 comprising both inner and outer links (e.g., the links of inner core 12 and outer sleeve 14 of FIGs. 11A - 11C). In an embodiment, the cables 382 can be used to steer and/or releasably tighten to "lock'Vstiffen either or both of the inner or outer links such as described above. In an embodiment, one or more cables 382 can be used to lock the links and two or more cables 382 can be used to steer the links. For example, three cables 382 can be designated for steering the links of outer sleeve 14 of FIGs. 11A-l 1C in three dimensions. These three cables 382 can also be used for locking the outer sleeve. The remaining cable(s) 382 can be used for locking the links of inner core 12. In an embodiment, when using cables 382 for locking, the forces applied can be distributed over cables 382. For example, if a 36 lb force is applied for locking the outer sleeve 14 connected to three cables, a force of 12 lbs can be applied to each of the connected cables. In an embodiment, three of the bobbins 380 are configured to control the outer links, such as to steer, feed cable for probe arm 315 advancement, retract cable for probe arm 315 retraction, transition probe arm 315 from a limp to a rigid state (e.g. to lock), and to transition probe arm 315 from a rigid to a limp state (e.g. to become flexible). In this embodiment, one bobbin 380 is typically used to control the inner links, such as to feed cable for probe arm 315 advancement, retract cable for probe arm 315 retraction, transition probe arm 315 from a limp to a rigid state (e.g. to lock), and to transition probe arm 315 from a rigid to a limp state (e.g. to become flexible). In some embodiments, the forces exerted by the bobbins 380 can exceed 1, 10, 30 and/or 50 pounds,

such as to lock the attached inner or outer links of probe arm 315. In configurations in which four cables are used to steer and lock probe arm 315, collective forces exerted by the bobbins can exceed 95 pounds, such as when 50 pounds is applied to lock the inner links (e.g. with a single cable) and 15 pounds per cable is used to lock the outer links (e.g. with three cables). In various embodiments, the amount of force applied is related to the size (including diameter and length) of the links of the inner core 12 and outer sleeve 14 and also to the smoothness of the steering of the links. Greater force may be necessary to lock and stabilize a set of larger and/or longer links, including when the links are extended or retracted with respect to each other.

A heel plate 375 is fixedly attached to the stabilization plate 370 and can lockably engage with a base unit (e.g., base unit 200 shown and described with respect to FIG. 7A). Latches 350 are also attached to the housing 360 which are arranged to lockably engage with a base unit (e.g., base unit 200 shown and described with respect to FIG. 7A). In an embodiment, latches 350 can articulate and are spring loaded, so as to rotate downward upon engaging latch prongs (such as prongs 245 of FIG. 7A). In an embodiment, the spring loaded latches 350 provide up to about 20 pounds of tension. The heel plate 375 and latches 350 interlock with a base unit (e.g., base unit 200 of FIG. 7A) and thereby stabilize and aid in the resistance of undesired motion, including lateral motion, of the feeder system and base unit during the transfer of power to the probe arm 315 such as via bobbins 380. In an embodiment, the feeder system 300 is configured to be detachable from a base unit, such as to be cleaned or replaced with another feeder system (e.g., where a robot probe arm is exposed to biological or toxic materials).

The carriage drive segment 310 is attached distally to a reinforced introducer 314, further described below with reference to FIG. 4C, through which probe arm 315 extends and is used for guiding the probe arm's initial path through or toward a target area such as, for example, when introducer 314 comprises an outer surface similar to a body cavity shape found in a majority of patients. Probe arm 315 may be configured to rapidly advance through introducer 314, prior to fine motion control used after probe arm 315 exits introducer 314.

Referring to **FIGs. 2A, 2B** and **FIG. 3A,** an illustrative perspective view of a force-transfer driving subassembly 320 of the feeder system 300 is shown. Feeder system 300 includes a carriage drive segment 310 which is configured to independently drive two carriages 325 along two lead screws 322. In an embodiment, one carriage 325 drives an outer set of links and one carriage 325 drives an inner set of links such as described, for example,

with respect to FIGs. 11A - 11C. The lead screws 322 are driven by a ninety-degree gear assembly including gears 340 and 345. In an embodiment, gears 340 and 345 include helical threads so as to increase overall contact between them and further stabilize force transfer between a base unit (e.g., base unit 200 of FIG. 7A) and articulating probe arm 315. In an embodiment, gears 340 engage rotary drives such as rotary drives 250 shown in FIG. 7A and further described below. Lead screws 322 are secured within bearing mounting blocks 342 and 344 that are mounted to housing 360. In an embodiment, bearing mounting block 342 includes thrust bearings 347 for further stabilizing the force transfer between gears 345 and lead screws 322. In an embodiment, carriages 325 include grooves to slidably ride upon guide rails 327, which aid in ensuring linear movement of carriages 325 and providing additional stabilization of the assembly 320, feeder system 300, and probe arm 315, so as to resist undesired movement during force-transfer, such as undesired torqueing or compression of feeder system 300. Guide rails 327 can further prevent undesired relative movement between the carriages, particularly when unequal forces are applied to them. In an embodiment, rails 327 are slidingly received and fixed within bearing blocks 344 and 342 in order to maintain substantially parallel configuration to maintain stability of the feeder system 300. In an embodiment, guide rails 327 are configured to have square, rectangular, round, slotted, or other various cross sectional shapes configured to slidingly engage a receiving portion of carriages 325. In one embodiment, guide rails 327 have a rectangular cross section configured to prevent undesired twisting along one or more axes of feeder system 300 (e.g. the major axis of feeder system 300). The dual screw and rail configuration helps, in particular, to resist twisting and bending of the feeder system. In an embodiment, subassembly 320 is a separate subassembly that is secured into the housing 360 to minimize the deflection of the housing during force transfer, such as when housing 360 comprises a plastic, injection-molded housing. In an embodiment, the carriages 325 include reinforced bushings to engage with the lead screws and/or rails. In an embodiment, the bushings are coated with Teflon or a similarly lubricious material. **FIG. 3B** is a design schematic of a force-transfer driving subassembly 320 of the feeder system 300 according to an embodiment of inventive concepts. **FIG. 3C** is an illustrative side-perspective view of a ninety-degree gear transfer subassembly of the force-transfer driving assembly of FIG. 3B.

FIG. 3D is another illustrative perspective view of a force-transfer driving subassembly 320 of FIG. 3B, with one lead screw 322 and other components removed for illustrative clarity. In an embodiment, the mounting block 344 includes spherical bearings

343 to help ensure proper alignment between the lead screw 322 and the bearing mounting block 344. **FIG. 3E** is an illustrative perspective view of a bearing mounting block 344 for a lead screw of the force-transfer driving assembly of FIGs. 3A-3B according to an embodiment of inventive concepts.

FIG. 3F is an illustrative perspective view of a bearing mounting block 342 for a lead screw 322 of the force-transfer driving assembly 320 of FIG. 3A-3B. As discussed above, in an embodiment, bearing mounting block 342 includes thrust bearings 347 for further stabilizing the force transfer between gears 345 and lead screws 322.

FIG. 4A is an illustrative internal perspective view of the feeder system 300 according to an embodiment of inventive concepts. System 300 can comprise components similar to those described hereabove. In an embodiment, a floating mounting block 390 supports an electrical connector 392 and aids in electrically isolating connector 392 from a chassis of a base unit, for example base unit 200 of FIG. 7A. Alignment pins 395 help ensure alignment of the electrical connector 392 and may also provide additional motion resistant stabilization. In an embodiment, the alignment pins 395 are tapered so as to improve insertion, alignment and motion resistance. Electrical and/or fiber optic connections can be used, for example, to provide power to and/or transmission signals to or from various components connected to the probe arm 315 including but not limited to one or more elements integrated into distal end 115 of probe arm 315 such as one or more elements selected from the group consisting of: a camera; a light such as an LED; an electrode such as an electrode configured to deliver radiofrequency energy; and combinations of these. A gripping and latch release handle 312 permits an operator to releasably engage/connect the feeder system with a base unit. In one embodiment, handle 312 is configured to rotate latches 350, such as to engage one or more pins of a base unit, such as pins 245 of base unit 200 of Fig. 7A.

Probe arm 315 typically includes one or more working channels, such as internal working channels 117a and external, sideport working channels 117b. Sideport working channels 117b are connected to guide tubes 317, configured to receive the distal portions of one or more elongate tools such as those described in reference to Fig. 1C.

FIG. 4B is an illustrative external perspective view of the feeder system 300 of FIG. 4A according to an embodiment of inventive concepts, including a housing cover 330. Housing cover 330 includes various openings, recesses, and slots for interfacing, securing, and/or stabilizing attachment of the feeder system 300 to a base unit (e.g., base unit 200).

Receiving holes 336, 332 and 334, for example, are configured to engage pins 205, 270, and 222, respectively, of a base unit 200 such as shown in FIG. 7A and provide additional stability and resistance to movement between the feeder system 300 and base unit 200. Alternatively or additionally, holes 336, 332 and/or 334 may be configured to allow pins 205, 270 and/or 222, respectively to pass therethrough, and engage with one or more other components of feeder system 300, such as one or more stabilizing metal plates of feeder system 300.

FIG. 4C is an illustrative perspective view of an introducer assembly 314 according to an embodiment of inventive concepts. Introducer assembly 314 is mounted to mounting block 344 via mounting screws 318 and includes stabilization ribs 319 to prevent bending and twisting of the introducer assembly 314 and any probe arm and attached tools guided therethrough. Tool guides 317 are rotatably connected to the distal end of introducer 314 at ball joint 316b of collar 316 which, in embodiments, is reinforced to further stabilize the introducer assembly.

FIG. 5A is another illustrative top view of a stabilizing plate 370 for a force-transfer driving assembly of a feeder system 300 according to an embodiment of inventive concepts. **FIG. 5B** is a perspective view of the stabilizing plate 370 of FIG. 5A. **FIG. 5C** is a perspective partial view of the stabilizing plate of FIG. 5A integrated within a feeder assembly according to an embodiment of inventive concepts. **FIG. 5D** is an illustrative view of a bobbin and cable feeding mechanism arranged with the stabilization plate 370 of FIG. 5A. In an embodiment, the mounted heel plate 375 includes aligning ribs 377 which improve alignment and motion resistance at the attachment of the feeder assembly 300 to a base unit, for example base unit 200 of FIG. 7A. In an embodiment, the stabilizing plate 370 includes a mating surface 372 that serves as an alignment guide, mating with a zero draft projection 373 of housing 360 when assembling the stabilization plate 370 with feeder system assembly 300 (as shown in Fig. 5C) so as to allow precision fitting and minimal gap tolerances between the fitted parts, thereby minimizing undesired movement between the parts. Screws 376 align, attach, and stabilize heel plate 375 with respect to stabilizing plate 370. Recess 374 engages an articulating latching tongue of a base unit, such as latching tongue 230 of Fig. base unit 200 of FIG. 7A.

FIG. 6 is a top illustrative view of an elongate stabilizing plate 370' integrated within a feeder assembly 300' according to an embodiment of inventive concepts. In an embodiment, a single stabilizing mounting plate 370' mounts together with heel plate 375,

bobbins 380, a force-transfer drive subassembly 320, and probe arm 315, such as to minimize twisting, compression and other undesired displacements. Probe arm 315 comprises outer links 14 and inner links 12, such as those described in reference to Figs. 11A - 11C. A unitary mounting plate 370' can provide additional resistance to bending or twisting of the feeder assembly 300' and can simplify construction of the feeder assembly 300'. Stabilizing plate 370' is secured to housing 360 via mounting screws 371. Feeder assembly 300' includes other components, such as those with the same reference numbers as are described above in reference to feeder assembly 300.

FIG. 7A is an illustrative perspective view of a base unit 200 of an articulated robotic probe 175 (shown in FIG. 1A) according to an embodiment of inventive concepts. **FIG. 7B** is an illustrative partial perspective view of the base unit 200 of FIG. 7A. **FIG. 8** is an illustrative cross-sectional view of a base unit 200 of an articulated robotic probe according to an embodiment of inventive concepts. Base unit 200 can be arranged to maximize stability of the robotic probe arm 315 with respect to a patient operating table and serve to permit a feeder assembly 300 to be detachable and replaceable. Base unit 200 comprises a handle, such as a handle 210 configured to allow an operator to carry, engage and/or position base unit 200. A clamping tongue 230 and slot 232 may engage the heel plate 375 of a feeder assembly (components of feeder assembly 300 described with respect to FIGs. 7A, 7B, and 8 have been previously described herein). In an embodiment, clamping tongue 230 is spring loaded with a spring, such as spring 238 of Fig. 8, to exert a clamping force on the top of heel plate 375 during engagement. Slot 232 also includes pressure loaded ball plungers 234 which increase the tightness of fit of heel plate 375 into slot 232, further strengthening and stabilizing the connection between base unit 200 and feeder assembly 300. Base unit 200 includes motor driven wheels 220 which engage and drive bobbins 380. Two motor driven wheels 250 engage and drive gears 340, which in turn drive gears 345 such as to rotate lead screws 320 and advance and retract carriages 325 of force-transfer driving subassembly 320 of the feeder system 300. A bullet pin 270 engages receiving hole 332 of feeder assembly 300. As previously described, this and other projections, including alignment pins 205, 222, and 235, mate with receiving holes, recesses, slots, and/or the surface of feeder assembly 300 to enhance alignment and motion resistance, including yaw between the base unit 200 and feeder assembly 300, and/or any twisting and/or compression of feeder assembly 300. In an embodiment, numerous projections such as described are incorporated into a housing 360, which further stabilizes the interface between base unit 200 and feeder system 300. A mating

between alignment pins 395 of the feeder assembly 300 and receiving holes 292 of the base unit 200 further aligns the connection between the male electrical connector 392 and a female connector 290 of the base unit, and also similarly aids in aligning and reinforcing motion resistance between the base unit 200 and feeder assembly 300. In an embodiment, other stabilizing plates, such as plates 274 and 272 of Fig. 8, are incorporated within base unit 200 and are mounted and connected together, such as by vertically oriented support posts 275 of Fig. 8.

In an embodiment, the posts 275 pass through and/or between various stabilizing plates that reinforce their stability with respect to one another and the entire base unit. In an embodiment, a lower stabilizing plate 274 is connected with a base unit mounting plate 280, further described below with respect to FIGs. 9-11. Posts 275 are secured within mounting fixtures 283 of mounting plate 280 to help secure and stabilize the mounting plate with respect to the base unit 200. In an embodiment, posts 275 are constructed of solid metal.

In an embodiment, a faraday cage 277 is mounted to mounting plate 280, and helps block undesired electrical signals from interfering with operation of the robotic system. The faraday cage 277 also provides additional rigidity to the base unit 200 so as to prevent undesired motion caused by robot-generated forces, such as forces exerted on one or more bobbins 380 by a cable attached to bobbin 380 and to a link of inner core 12 or a link of outer sleeve 14 of probe arm 315.

FIG. 9 is a lower perspective view of a base unit 200 of an articulated robotic probe according to an embodiment of inventive concepts, and **FIG. 10** is an illustrative perspective view of mounting plate 280 for the base unit 200. Base unit mounting plate 280 includes a stand connecting interface 282 including a locking screw hole 284, which can be used to securely attach base unit 200 to a stand such as, for example, stand 120 of FIG. 1A. In an embodiment, the stand connecting interface can include spacers (e.g., made of plastic), a key hole slotted plastic isolation plate, and insulated standoffs in order to electrically isolate the stand connecting interface from the rest of the base unit. In an embodiment, mounting plate 280 includes heat dissipation elements 283.

As described herein, the systems and methods of the present inventive concepts prevent, mitigate, or otherwise restrict, undesired movement, including bending, torsional rotation, twisting and/or compression of a highly articulated robotic system and its components which support and provide force transfer through the robotic system.

While the present inventive concepts have been particularly shown and described above with reference to exemplary embodiments thereof, it will be understood by those of ordinary skill in the art, that various changes in form and detail can be made without departing from the spirit and scope of the present inventive concepts described and defined by the following claims.

CLAIMS

What is claimed is:

1. An apparatus for driving an articulating probe, the apparatus comprising:

at least one elongate probe constructed and arranged to articulate in at least one predetermined degree of motion and to transition from a flexible state to a rigid state;

a force transfer mechanism constructed and arranged to apply a force to the at least one elongate probe, said force selected from the group consisting of:

a force that causes the at least one elongate probe to articulate in the at least one predetermined degree of motion; and

a force that causes the at least one elongate probe to transition from the flexible state to the rigid state; and

a base structure attached to at least a portion of the force transfer mechanism and the at least one elongate probe; the base structure comprising one or more stabilizing elements constructed and arranged to resist undesired movement of the at least one elongate probe caused by force from the force transfer mechanism.

2. The apparatus of claim 1 wherein at least one of the stabilizing elements is constructed and arranged to resist twisting of the base structure.

3. The apparatus of claim 1 wherein at least one of the stabilizing elements is constructed and arranged to resist flexing of the base structure.

4. The apparatus of claim 3 wherein at least one of the stabilizing elements is constructed and arranged to resist compression of the base structure.

5. The apparatus of claim 3 wherein at least one of the stabilizing elements is constructed and arranged to resist stretching of the base structure.

6. The apparatus of claim 3 wherein at least one of the stabilizing elements is constructed and arranged to resist lengthening of the base structure.

7. The apparatus of claim 1 wherein the base structure comprises a housing and wherein at least one of the stabilizing elements comprises a rib connected to the housing.

8. The apparatus of claim 1 wherein the base structure comprises a housing comprising a first portion and a thicker second portion and wherein at least one of the stabilizing elements comprises the thicker second portion.

9. The apparatus of claim 1 wherein the one or more stabilizing elements comprises a force distribution plate.

10. The apparatus of claim 9 wherein the base structure comprises a plastic housing and wherein the force distribution plate comprises a metal plate attached to the plastic housing.

11. The apparatus of claim 9 wherein the force transfer mechanism comprises at least one cable and at least one bobbin, wherein applying a force to the at least one elongate probe comprises rotating the at least one bobbin, and wherein the at least one bobbin is attached to and stabilized by the force distribution plate.

12. The apparatus of claim 11 wherein the force transfer mechanism further comprises at least two cables and at least two corresponding bobbins, wherein applying a force to the at least one elongate probe further comprises rotating the at least two bobbins, and wherein the at least two bobbins are attached to the force distribution plate.

13. The apparatus of claim 11 wherein the force transfer mechanism further comprises at least three cables and at least three bobbins, wherein applying a force to the at least one elongate probe further comprises rotating the at least three bobbins, and wherein the at least three bobbins are attached to the force distribution plate.

14. The apparatus of claim 9 wherein the force transfer mechanism comprises at least one cable, at least one bobbin and at least one cart, wherein applying a force to the at least one

elongate probe comprises rotating the at least one bobbin, wherein the at least one cart is constructed and arranged to advance and retract the at least one elongate probe, and wherein the at least one bobbin and the at least one cart are attached to the force distribution plate.

15. The apparatus of claim 9 wherein the force transfer mechanism comprises at least one gear, wherein advancing or retracting the at least one elongate probe comprises rotating the at least one gear.

16. The apparatus of claim 15 wherein the at least one gear comprises at least one lead screw for driving at least one cart, wherein the at least one cart is movably mounted on the at least one lead screw.

17. The apparatus of claim 1 wherein the base structure comprises a first portion operably attachable to a second portion, and wherein at least one stabilizing element comprises at least one projection extending from the first portion and at least one recess positioned in the second portion to receive the at least one projection.

18. The apparatus of claim 17 wherein the at least one projection comprises a tongue plate and the at least one recess comprises a slot for receiving the tongue plate.

19. The apparatus of claim 1 wherein the base structure comprises a first portion, a second portion, and at least one stabilizing element comprises a latching assembly for operably attaching the first portion to the second portion.

20. The apparatus of claim 19 wherein the latching assembly is spring-loaded.

21. The apparatus of claim 1 further comprising at least one cart attached to the at least one elongate probe, wherein the at least one cart comprises a first cart that is constructed and arranged to advance and retract the at least one elongate probe, and wherein at least one stabilizing element comprises an elongate guide fixture constructed and arranged to slidingly guide the first cart.

22. The apparatus of claim 21 further comprising a second elongate probe and a second cart attached to the second elongate probe, wherein the second cart is constructed and arranged to advance and retract the second elongate probe, and wherein the at least one stabilizing element further comprises a second guide fixture constructed and arranged to slidingly guide the second cart.

23. The apparatus of claim 22 wherein the second guide fixture is a rail.

24. The apparatus of claim 22 wherein the second guide fixture is a solid cylindrical metal rail.

25. The apparatus of claim 24 wherein the second guide fixture comprise an elongate slot that receives and communicates with at least one corresponding male fixture of at least one of the first and the second carts.

26. The apparatus of claim 1 wherein the force that causes the at least one elongate probe to transition from the flexible state to the rigid state comprises a force of at least 1 pound.

27. The apparatus of claim 26 wherein the force that causes the at least one elongate probe to transition from the flexible state to the rigid state comprises a force of at least 10 pounds.

28. The apparatus of claim 27 wherein the force that causes the at least one elongate probe to transition from the flexible state to the rigid state comprises a force of at least 20 pounds.

29. The apparatus of claim 28 wherein the force that causes the at least one elongate probe to transition from the flexible state to the rigid state comprises a force of approximately 30 pounds.

30. The apparatus of claim 1 wherein the force transfer mechanism comprises at least one cable constructed and arranged to transmit the force that causes the at least one elongate probe to transition from the flexible state to the rigid state.

31. The apparatus of claim 30 wherein the force transfer mechanism comprises at least two cables constructed and arranged to collectively transmit the force that causes the at least one elongate probe to transition from the flexible state to the rigid state.

32. The apparatus of claim 31 wherein the at least two cables are further constructed and arranged to transmit the force to articulate the at least one elongate probe.

33. The apparatus of claim 32 wherein the force transfer mechanism comprises at least three cables constructed and arranged to collectively transmit the force that causes the at least one elongate probe to transition from the flexible state to the rigid state.

34. The apparatus of claim 33 wherein the at least three cables are further constructed and arranged to transmit the force to articulate the at least one elongate probe.

35. The apparatus of claim 1 wherein the at least one elongate probe comprises a first probe arm and a second probe arm, the first probe arm enclosing the second probe arm, wherein the force transfer mechanism is constructed and arranged to drive the first and second probe arms longitudinally with respect to each other, and wherein the force transfer mechanism comprises a locking mechanism to independently lock or release each of the first and second probe arms in the flexible state or the rigid state.

36. The apparatus of claim 35 wherein the at least one elongate probe comprises a steerable distal end.

37. The apparatus of claim 36 wherein the at least one predetermined degree of motion comprises three degrees of motion about which the steerable distal end can be steered.

38. The apparatus of claim 1 wherein the base structure comprises a feeding structure through which the at least one elongate probe is fed from the base structure.

39. The apparatus of claim 38 wherein the feeding structure comprises at least one slidable actuating carriage constructed and arranged to advance and retract the at least one elongate probe.

40. The apparatus of claim 39 wherein the one or more stabilizing elements comprise at least two rails on which the at least one slidable actuating carriage slides, the at least two rails constructed and arranged to substantially prevent movement of the at least one slidable actuating carriage in a direction other than a predetermined motion along a longitudinal axis of the at least two rails.

41. The apparatus of claim 40 wherein the at least two rails comprise two spaced apart and parallel rails constructed and arranged to substantially prevent twisting or bending of the base structure.

42. The apparatus of claim 41 wherein the at least two rails are solid.

43. The apparatus of claim 41 wherein the at least two rails are hollow.

44. The apparatus of claim 39 wherein the at least one slidable actuating carriage comprises first and second slidable actuating carriages to respectively advance first and second probe arms of the articulating probe, wherein the second probe arm is slidable within the first probe arm.

45. The apparatus of claim 44 wherein the first probe arm comprises a plurality of inner links and the second probe arm comprises a plurality of outer links, wherein the inner and outer links articulate with respect to each other.

46. The apparatus of claim 39 wherein the feeding structure comprises at least one elongate lead screw constructed and arranged to be rotated so as to drive actuation of the at least one slidable actuating carriage.

47. The apparatus of claim 46 wherein the at least one elongate lead screw comprises two parallel and spaced apart lead screws constructed and arranged to substantially prevent twisting or bending of the base structure.

48. The apparatus of claim 46 wherein the one or more stabilizing elements comprise at least one metal mounting plate to which the at least one elongate lead screw is mounted so as to minimize non-linear movement of the at least one slidable actuating carriage with respect to the feeding structure.

49. The apparatus of claim 39 wherein the at least one slidable actuating carriage comprises Teflon-coated bushings constructed and arranged to substantially prevent movement of the at least one slidable actuating carriage in a direction other than a predetermined motion along a longitudinal axis of the at least one elongate lead screws.

50. The apparatus of claim 38 wherein the force transfer mechanism comprises at least one gear connecting the feeding structure to drive the articulating probe and wherein the one or more stabilizing elements comprise helical threads on the at least one gear to increase the connective area between the base structure and the feeding structure.

51. The apparatus of claim 38 wherein the force transfer mechanism comprises at least two cables housed within the feeding structure constructed and arranged to steer a distal end of the at least one elongate probe.

52. The apparatus of claim 51 wherein the at least two cables comprises three cables constructed and arranged to steer a distal end of the at least one elongate probe in three degrees of freedom.

53. The apparatus of claims 51 and 35 wherein the at least two cables are constructed and arranged to drive the locking mechanism.

54. The apparatus of claim 38 wherein the force transfer mechanism located within the feeding structure comprises a sub-assembly constructed independently from the feeding structure.

55. The apparatus of claim 54 wherein the feeding structure is secured to the sub¬assembly so as to increase the rigidity of the sub-assembly during articulation of the at least one elongate probe.

56. The apparatus of claim 38 wherein the force transfer mechanism comprises at least one rotatable bobbin housed within the feeding structure to drive articulation of the at least one elongate probe.

57. The apparatus of claims 56 and 51 wherein the at least one rotatable bobbin drives articulation of the at least two cables.

58. The apparatus of claims 56 and 55 wherein the at least one rotatable bobbin is mounted to a mounting plate, the mounting plate further mounted to the sub-assembly.

59. The apparatus of claims 54, 40, and 46 wherein the sub-assembly further comprises the at least one slidable actuating carriage, the at least two rails, and the at least one elongate lead screw.

60. The apparatus of claim 38 wherein the feeding structure is a detachable portion of the base structure, wherein an interface between the feeding structure and a non-detachable portion of the base structure comprises at least one alignment feature that aligns the feeding structure with the base structure.

61. The apparatus of claim 60 wherein the at least one alignment feature comprises at least one protrusion of the interface to fixedly engage with at least one alignment slot of the interface.

62. The apparatus of claim 61 wherein the at least one alignment feature comprises at least two slots of the interface to interface with at least two alignment pegs of the interface.

63. The apparatus of claim 61 wherein the at least one protrusion comprises a vertically oriented alignment plate.

64. The apparatus of claim 63 wherein the vertically oriented alignment plate extends across at least one half of a width of the feeding structure.

65. The apparatus of claim 63 wherein the at least one alignment feature comprises two or more ball plungers constructed and arranged to engage with the vertically oriented alignment plate so as to further align the vertically oriented alignment plate within the at least one alignment slot and reduce motion of the alignment plate within the at least one alignment slot.

66. The apparatus of claim 65 wherein the two or more ball plungers are constructed and arranged to prevent improper orientation of the vertically oriented alignment plate within the at least one alignment slot.

67. The apparatus of claim 63 wherein the alignment plate comprises an alignment rib on a face of the vertically oriented alignment plate so as to reduce sliding of the vertically oriented alignment plate across the length of the at least one alignment slot.

68. The apparatus of claim 63 wherein the vertically oriented alignment plate comprises a tongue slot at the proximal end of the vertically oriented alignment plate, the tongue slot constructed and arranged to engage and interlock with an articulating tongue when the articulating tongue engages with the tongue slot, wherein the articulating tongue is attached to the non-detachable portion of the base structure.

69. The apparatus of claim 60 wherein the interface comprises at least two protrusions and two slots constructed and arranged to interface with each other upon connecting the feeding structure with the non-detachable portion of the base structure, wherein the base structure comprises a support structure, wherein a first protrusion and a second protrusion are horizontally separated from each other by at least a half of the horizontal maximum length of the support structure in order to substantially align the base structure and support structure and prevent a rotating yaw of the support structure.

70. The apparatus of claim 60 wherein the interface comprises at least two protrusions and two slots constructed and arranged to interface with each other upon connecting the

feeding structure to the base structure, wherein a first protrusion and a second protrusion are located directly about two sides of a first electrical connector in the interface, the first and second protrusions constructed and arranged to mate with first and second slots in the interface, the first electrical connector constructed and arranged to mate with a second electrical connector located in the interface.

71. The apparatus of claim 70 wherein the first and second protrusions are tapered to provide fine alignment of the first and second electrical connectors with each other.

72. The apparatus of claim 60 wherein the interface comprises one or more horizontally oriented spring-loaded slots and one or more corresponding horizontally oriented pins constructed and arranged to engage the one or more horizontally oriented spring-loaded slots upon connecting the feeding structure to the base structure.

73. The apparatus of claim 1 wherein the portion of the force transfer mechanism secured within the base structure is driven by at least one force-generating unit.

74. The apparatus of claim 73 wherein the at least one force generating unit comprises a motor.

75. The apparatus of claim 74 wherein the motor generates force through at least one of a solenoid, valve, cylinder, hydraulic, and pneumatic.

76. The apparatus of claim 73 and 60 wherein the at least one force-generating unit is housed outside of the detachable feeding structure.

77. The apparatus of claim 1 wherein the base structure comprises a base plate, the base plate comprising a stand connecting interface for mounting the base structure to a stand structure.

78. The apparatus of claim 77 wherein the stand connecting interface is integrated within the base plate of the base structure.

79. The apparatus of claim 77 wherein the stand connecting interface is electrically isolated from the rest of the base structure.

80. The apparatus of claim 79 wherein the stand connecting interface comprises at least one of plastic spacers, a key hole slotted plastic isolation plate, and insulated standoffs constructed and arranged to electrically isolate the stand connecting interface from the rest of the base structure.

81. The apparatus of claim 1 wherein the one or more stabilizing elements comprises one or more vertically oriented posts extending between a ground connecting interface and a chassis of the base structure.

82. The apparatus of claim 81 wherein the one or more vertically oriented posts are constructed of solid metal.

83. The apparatus of claim 81 wherein the one or more vertically oriented posts extend from a plate in the chassis.

84. The apparatus of claim 1 wherein the base structure comprises a Faraday cage connecting a chassis of the base structure so as to prevent undesired electrical interference from external sources and emission to other electrical devices.

85. The apparatus of claim 1 further comprising an introducer conduit attached to the base structure, the introducer conduit constructed and arranged to guide the at least one elongate probe along a predetermined path.

86. The apparatus of claim 85 wherein the introducer conduit is fastened to a bearing block securing at least one lead screw so as to align the introducer conduit with at least one slidable carriage.

87. The apparatus of claim 1 wherein the at least one force translating mechanism is constructed and arranged to translate at least about thirty pounds of force while the one or

more stabilizing elements substantially limits motion of the at least one elongate probe to the at least one predetermined degree of motion.

88. An apparatus for driving an articulating probe, the apparatus comprising:

at least one elongate probe arm constructed and arranged to articulate in at least one predetermined degree of motion;

an articulation mechanism constructed and arranged to drive the articulation of the at least one elongate probe arm in the at least one predetermined degree of motion;

a base structure constructed and arranged to remain stationary with respect to the articulation mechanism of the at least one elongate probe arm and to fixedly secure at least a portion of the articulation mechanism, the base structure comprising a support structure extending the articulation mechanism from the base structure to the at least one elongate probe arm, the support structure constructed and arranged to substantially limit motion of the at least one elongate probe arm to the driven at least one predetermined degree of motion;

wherein the at least one elongate probe arm comprises a first probe arm and a second probe arm, the first probe arm enclosing the second probe arm, wherein the articulation mechanism is constructed and arranged to drive the first and second probe arms longitudinally with respect to each other, and wherein the articulation mechanism comprises a locking mechanism to independently lock or release each of the first and second probe arms in states of rigidity and flexibility, respectively.

89. The apparatus of claim 88 wherein the at least one elongate probe arm comprises a steerable distal end.

90. The apparatus of claim 89 wherein the at least one predetermined degree of motion comprises three degrees of motion about which the steerable distal end can be steered.

91. The apparatus of claim 88 wherein the at least one elongate probe arm comprises a proximal end, and wherein the base structure comprises a feeding conduit through which the at least one elongate probe arm is fed from the base structure.

92. The apparatus of claim 91 wherein the feeding conduit comprises at least one slidable actuating carriage constructed and arranged within the feeding conduit to advance and retract the at least one elongate probe arm.

93. The apparatus of claim 92 wherein the at least one slidable actuating carriage comprises first and second slidable actuating carriages to advance the first and second probe arms of the at least one elongate probe arm, the second probe arm slidable within the first probe arm.

94. The apparatus of claim 92 wherein the feeding conduit comprises at least two rails on which the at least one slidable actuating carriage slides, the at least two rails constructed and arranged to substantially prevent movement of the at least one slidable actuating carriage in directions other than a predetermined motion along a longitudinal axis of the at least two rails.

95. The apparatus of claim 94 wherein the at least two rails are parallel and spaced apart so as to substantially prevent twisting or bending of the base structure.

96. The apparatus of claim 94 wherein the at least two rails comprise slots constructed and arranged to guide sliding of the at least one slidable actuating carriage.

97. The apparatus of claim 94 wherein the at least two rails are cylindrical.

98. The apparatus of claim 92 wherein the feeding conduit comprises at least one elongate lead screw constructed and arranged to be rotated so as to drive actuation of the at least one slidable actuating carriage.

99. The apparatus of claim 92 wherein the at least one elongate lead screws comprises two lead screws.

100. The apparatus of claim 98 wherein the at least one elongate lead screw is mounted to the feeding conduit with at least one metal plate so as to minimize non-linear movement of the at least one slidable actuating carriages with respect to the feeding conduit.

101. The apparatus of claim 98 wherein the at least one slidable actuating carriage comprises Teflon-coated bushings constructed and arranged to engage the at least one elongate lead screw.

102. The apparatus of claim 98 wherein the at least one lead screw is supported by at least one bearing having a bearing block affixed to the feeding conduit so as to substantially prevent movement of the at least one elongate lead screw other than the rotation for driving actuation of the at least one slidable actuation carriage.

103. The apparatus of claim 102 wherein the at least one bearing is a thrust bearing.

104. The apparatus of claim 102 and 98 wherein the at least one elongate lead screw is supported by at least one spherical bearing constructed and arranged to self align the at least one elongate lead screw with a bearing block securing the at least one elongate lead screw and substantially preventing movement of the at least one elongate lead screw other than the rotation for driving actuation of the at least one slidable actuation carriage.

105. The apparatus of claim 104 and 102 wherein the at least one spherical bearing is located at a distal end of the at least one elongate lead screw and the at least one bearing is located at the proximal end of the at least one elongate lead screw.

106. The apparatus of claim 91 wherein the articulation mechanism comprises at least one helical gear to drive the articulation mechanism and to increase the connective area between the support structure and the portion of the articulation mechanism fixedly secured to the base structure.

107. The apparatus of claim 106 and 98 wherein the at least one helical gear drives actuation of the at least one elongate lead screw.

108. The apparatus of claim 91 wherein the articulation mechanism comprises at least two cables housed within the feeding conduit and constructed and arranged to articulate the at least one elongate probe arm.

109. The apparatus of claim 108 wherein the articulation mechanism comprises at least two cables housed within the feeding conduit and constructed and arranged to steer a distal end of the at least one elongate probe arm.

110. The apparatus of claim 109 wherein the at least two cables comprises three cables constructed and arranged to steer a distal end of the at least one elongate probe arm in three degrees of motion.

111. The apparatus of claim 109 wherein the at least two cables are constructed and arranged to drive the locking mechanism.

112. The apparatus of claim 91 wherein a portion of the articulation mechanism not secured within the base unit comprises a sub-assembly constructed independently from the feeding conduit.

113. The apparatus of claim 112 wherein the feeding conduit is secured to the sub¬assembly so as to increase the rigidity of the sub-assembly during articulation.

114. The apparatus of claim 91 wherein the articulation mechanism comprises at least one rotatable bobbin housed within the feeding unit to drive articulation of the at least one elongate probe arm.

115. The apparatus of claims 114 and 108 wherein the at least one rotatable bobbin drives articulation of the at least two cables.

116. The apparatus of claims 114 and 112 wherein the at least one rotatable bobbin is mounted to a mounting plate, the mounting plate further mounted to the sub-assembly.

117. The apparatus of claims 116, 94, and 98 wherein the sub-assembly further comprises the at least one slidable actuating carriage, the at least two rails, and the at least one lead screw.

118. The apparatus of claim 116 wherein the mounting plate comprises alignment features that align the mounting plate with the base structure.

119. The apparatus of claim 118 wherein the alignment features comprise at least one slot constructed to fixedly engage with at least one protrusion of the base structure.

120. The apparatus of claim 119 wherein the at least one protrusion of the base structure comprises two or more alignment pegs.

121. The apparatus of claim 118 wherein the alignment features comprise at least one protrusion constructed and arranged to fixedly engage with at least one slot of the base structure.

122. The apparatus of claim 121 wherein the at least one protrusion comprises an alignment plate substantially orthogonal to the mounting plate.

123. The apparatus of claim 122 wherein the alignment plate extends across at least one half of a width of the mounting plate.

124. The apparatus of claim 122 wherein the at least one slot comprises ball plungers constructed and arranged to engage with the alignment plate so as to further align the alignment plate within the at least one slot and reduce motion of the alignment plate within the at least one slot.

125. The apparatus of claim 124 wherein the ball plungers are constructed and arranged to prevent improper orientation of the alignment plate within the at least one slot.

126. The apparatus of claim 125 wherein the alignment plate comprises an alignment rib on a face of the alignment plate so as to reduce sliding of the alignment plate across the length of the at least one slot.

127. The apparatus of claim 122 wherein the alignment plate comprises a tongue slot at a proximal end of the alignment plate, the tongue slot constructed and arranged to engage and

interlock with an articulating tongue when the articulating tongue engages with the tongue slot, the articulating tongue attached to the base structure so as to substantially prevent a rotating pitch of the support structure.

128. The apparatus of claim 88 wherein a portion of the articulation mechanism comprises at least one force-generating unit and wherein the support structure comprises at least one force translating unit driven by the at least one force-generating unit.

129. The apparatus of claim 128 wherein the at least one force-generating unit comprises a motor.

130. The apparatus of claim 129 wherein the motor generates force through at least one of a solenoid, valve, cylinder, hydraulic, and pneumatic.

131. The apparatus of claim 129 wherein the at least one force translating unit is constructed and arranged to translate at least about thirty pounds of force while the support structure substantially limits motion of the at least one elongate probe arm to the driven at least one predetermined degree of motion.

132. The apparatus of claim 88 wherein the base structure comprises a feeding structure separable from the base structure and a mounting interface for connecting the base structure and feeding structure together.

133. The apparatus of claim 132 wherein the mounting interface comprises at least two protrusions and two slots constructed and arranged to interface with each other upon connecting the base structure with the feeding structure, wherein a first protrusion and a second protrusion are horizontally separated from each other by at least a half of the horizontal maximum length of the feeding structure in order to substantially align the base structure and feeding structure and prevent a rotating yaw of the base structure.

134. The apparatus of claim 133 wherein the first and second protrusions are located about two sides of a first electrical connector in the mounting interface, the first and second protrusions constructed and arranged to mate with first and second slots in the mounting

interface, the first electrical connector constructed and arranged to mate with a second electrical connector located in the mounting interface.

135. The apparatus of claim 134 wherein the first and second protrusions are tapered to provide fine alignment of the first and second electrical connectors with each other.

136. The apparatus of claim 133 wherein the mounting interface comprises one or more horizontally oriented spring-loaded slots and one or more corresponding horizontally oriented pins constructed and arranged to engage the spring-loaded slots upon connecting the base structure with the feeding structure.

137. The apparatus of claim 88 wherein the base structure comprises a ground connecting interface for mounting the base structure to a ground-fixed structure.

138. The apparatus of claim 137 wherein the ground connecting interface is integrated within a plate of the base structure.

139. The apparatus of claim 138 wherein the ground connecting interface is electrically isolated from the rest of the base structure.

140. The apparatus of claim 139 wherein the ground connecting interface comprises at least one of plastic spacers, a key hole slotted plastic isolation plate, and insulated standoffs constructed and arranged to electrically isolate the stand interface from the rest of the base structure.

141. The apparatus of claim 140 wherein the support structure comprises one or more vertically oriented beams extending between the ground connecting interface and a chassis of the base structure.

142. The apparatus of claim 141 wherein the one or more vertically oriented beams are constructed of solid metal.

143. The apparatus of claim 141 wherein the one or more vertically oriented beams extend from a plate.

144. The apparatus of claim 137 wherein the base structure comprises a Faraday cage connecting a chassis of the base structure with the ground connecting interface constructed and arranged to prevent undesired electrical interference from external sources and emission to other electrical devices.

145. The apparatus of claim 88 further comprising an introducer conduit attached to the base structure, the introducer conduit constructed and arranged to guide the at least one elongate probe arm along a predetermined path.

146. The apparatus of claim 145 and 100 wherein the introducer conduit is fastened to the at least one metal plate via the at least one elongate lead screw so as to align the introducer conduit with the at least one slidable actuating carriage.

147. A method for driving an articulating probe, the method comprising:

providing at least one elongate probe constructed and arranged to articulate in at least one predetermined degree of motion and to transition from a flexible state to a rigid state;

providing a force transfer mechanism constructed and arranged to apply a force to the at least one elongate probe, said force selected from the group consisting of:

a force that causes the at least one elongate probe to articulate in the at least one predetermined degree of motion; and

a force that causes the at least one elongate probe to transition from the flexible state to the rigid state;

providing a base structure attached to at least a portion of the force transfer mechanism and the at least one elongate probe; the base structure comprising one or more stabilizing elements constructed and arranged to resist undesired movement of the at least one elongate probe caused by force from the force transfer mechanism; and

articulating the at least one elongate probe with the force transfer mechanism by:

placing a first probe of the at least one elongate probe in a flexible state;

articulating the first probe in a predetermined direction;

placing the first probe in a state of rigidity;

placing a second probe of the at least one elongate probe in a flexible state; and

advancing the second probe the predetermined direction relative to the first probe.

148. An apparatus for driving an articulating probe, the apparatus comprising:

at least one elongate probe constructed and arranged to articulate in at least one predetermined degree of motion and to transition from a flexible state to a rigid state;

a force transfer mechanism constructed and arranged to apply a force to the at least one elongate probe, said force selected from the group consisting of:

a force that causes the at least one elongate probe to articulate in the at least one predetermined degree of motion; and

a force that causes the at least one elongate probe to transition from the flexible state to the rigid state; and

a base structure attached to at least a portion of the force transfer mechanism and the at least one elongate probe; the base structure comprising one or more stabilizing elements constructed and arranged to resist undesired movement of the at least one elongate probe caused by force from the force transfer mechanism.

149. The apparatus of at least one of the preceding claims wherein at least one of the stabilizing elements is constructed and arranged to resist twisting of the base structure.

150. The apparatus of at least one of the preceding claims wherein at least one of the stabilizing elements is constructed and arranged to resist flexing of the base structure.

151. The apparatus of at least one of the preceding claims wherein at least one of the stabilizing elements is constructed and arranged to resist compression of the base structure.

152. The apparatus of at least one of the preceding claims wherein at least one of the stabilizing elements is constructed and arranged to resist stretching of the base structure.

153. The apparatus of at least one of the preceding claims wherein at least one of the stabilizing elements is constructed and arranged to resist lengthening of the base structure.

154. The apparatus of at least one of the preceding claims wherein the base structure comprises a housing and wherein at least one of the stabilizing elements comprises a rib connected to the housing.

155. The apparatus of at least one of the preceding claims wherein the base structure comprises a housing comprising a first portion and a thicker second portion and wherein the one or more stabilizing elements comprise the thicker second portion.

156. The apparatus of at least one of the preceding claims wherein the one or more stabilizing elements comprises a force distribution plate.

157. The apparatus of at least one of the preceding claims wherein the base structure comprises a plastic housing and wherein the force distribution plate comprises a metal plate attached to the plastic housing.

158. The apparatus of at least one of the preceding claims wherein the force transfer mechanism comprises at least one cable and at least one bobbin, wherein applying a force to the at least one elongate probe comprises rotating the at least one bobbin, and wherein the at least one bobbin is attached to and stabilized by the force distribution plate.

159. The apparatus of at least one of the preceding claims wherein the force transfer mechanism further comprises at least two cables and at least two corresponding bobbins, wherein applying a force to the at least one elongate probe further comprises rotating the at least two bobbins, and wherein the at least two bobbins are attached to the force distribution plate.

160. The apparatus of at least one of the preceding claims wherein the force transfer mechanism further comprises at least three cables and at least three bobbins, wherein applying a force to the at least one elongate probe further comprises rotating the at least three bobbins, and wherein the at least three bobbins are attached to the force distribution plate.

161. The apparatus of at least one of the preceding claims wherein the force transfer mechanism comprises at least one cable, at least one bobbin and at least one cart, wherein applying a force to the at least one elongate probe comprises rotating the at least one bobbin,

wherein the at least one cart is constructed and arranged to advance and retract the at least one elongate probe, and wherein the at least one bobbin and the at least one cart are attached to the force distribution plate.

162. The apparatus of at least one of the preceding claims wherein the force transfer mechanism comprises at least one gear, wherein advancing or retracting the at least one elongate probe comprises rotating the at least one gear.

163. The apparatus of at least one of the preceding claims wherein the at least one gear comprises at least one lead screw for driving an at least one cart, wherein the at least one cart is movably mounted on the at least one lead screw.

164. The apparatus of at least one of the preceding claims wherein the base structure comprises a first portion operably attachable to a second portion, and wherein at least one stabilizing element comprises at least one projection extending from the first portion and at least one recess positioned in the second portion to receive the at least one projection.

165. The apparatus of at least one of the preceding claims wherein the at least one projection comprises a tongue plate and the recess comprises a slot for receiving the tongue plate.

166. The apparatus of at least one of the preceding claims wherein the base structure comprises a first portion, a second portion, and at least one stabilizing element comprises a latching assembly for operably attaching the first portion to the second portion.

167. The apparatus of at least one of the preceding claims wherein the latching assembly is spring-loaded.

168. The apparatus of at least one of the preceding claims further comprising at least one cart attached to the at least one elongate probe, wherein the at least one cart comprises a first cart that is constructed and arranged to advance and retract the at least one elongate probe, and wherein at least one stabilizing element comprises an elongate guide fixture constructed and arranged to slidingly guide the first cart.

169. The apparatus of at least one of the preceding claims further comprising a second elongate probe and a second cart attached to the second elongate probe, wherein the second cart is constructed and arranged to advance and retract the second elongate probe, and wherein at least one stabilizing element further comprises a second guide fixture constructed and arranged to slidingly guide the second cart.

170. The apparatus of at least one of the preceding claims wherein the guide fixture is a rail.

171. The apparatus of at least one of the preceding claims wherein the guide fixture is a solid cylindrical metal rail.

172. The apparatus of at least one of the preceding claims wherein the guide fixture comprise an elongate slot that receives and communicates with at least one of a corresponding male fixture of at least one of the first and the second carts.

173. The apparatus of at least one of the preceding claims wherein the force that causes the at least one elongate probe to transition from the flexible state to the rigid state comprises a force of at least 1 pound.

174. The apparatus of at least one of the preceding claims wherein the force that causes the at least one elongate probe to transition from the flexible state to the rigid state comprises a force of at least 10 pounds.

175. The apparatus of at least one of the preceding claims wherein the force that causes the at least one elongate probe to transition from the flexible state to the rigid state comprises a force of at least 20 pounds.

176. The apparatus of at least one of the preceding claims wherein the force that causes the at least one elongate probe to transition from the flexible state to the rigid state comprises a force of approximately 30 pounds.

177. The apparatus of at least one of the preceding claims wherein the force transfer mechanism comprises at least one cable constructed and arranged to transmit a force that causes the at least one elongate probe to transition from the flexible state to the rigid state.

178. The apparatus of at least one of the preceding claims wherein the force transfer mechanism comprises at least two cables constructed and arranged to collectively transmit a force that causes the at least one elongate probe to transition from the flexible state to the rigid state.

179. The apparatus of at least one of the preceding claims wherein the at least two cables are further constructed and arranged to transmit the articulating force to articulate the at least one elongate probe.

180. The apparatus of at least one of the preceding claims wherein the force transfer mechanism comprises at least three cables constructed and arranged to collectively transmit a force that causes the at least one elongate probe to transition from the flexible state to the rigid state.

181. The apparatus of at least one of the preceding claims wherein the at least three cables are further constructed and arranged to transmit the articulating force to articulate the at least one elongate probe.

182. The apparatus of at least one of the preceding claims wherein the at least one probe arm comprises a first probe arm and a second probe arm, the first probe arm enclosing the second probe arm, wherein the force transfer mechanism is constructed and arranged to drive the first and second probe arms longitudinally with respect to each other and comprises a locking mechanism to independently lock or release each of the first and second probe arms in states of flexibility and rigidity.

183. The apparatus of at least one of the preceding claims wherein the at least one elongate probe comprises a steerable distal end.

184. The apparatus of at least one of the preceding claims wherein the at least one degree of motion comprises three degrees of motion about which the steerable distal end can be steered.

185. The apparatus of at least one of the preceding claims wherein the base structure comprises a feeding structure through which the at least one elongate probe is fed from the base structure.

186. The apparatus of at least one of the preceding claims wherein the feeding structure comprises at least one slidable actuating carriage constructed and arranged to advance and retract the at least one elongate probe.

187. The apparatus of at least one of the preceding claims wherein the one or more stabilizing elements comprise at least two rails on which the at least one slidable actuating carriage slides, the at least two rails constructed and arranged to substantially prevent movement of the at least one slidable actuating carriage in directions other than predetermined motion along the longitudinal axis of the rails.

188. The apparatus of at least one of the preceding claims wherein the at least two rails comprises two spaced apart and parallel rails constructed and arranged to substantially prevent twisting or bending of the base structure.

189. The apparatus of at least one of the preceding claims wherein the at least two rails are solid.

190. The apparatus of at least one of the preceding claims wherein the at least two rails are hollow.

191. The apparatus of at least one of the preceding claims wherein the at least one slidable actuating carriage comprises first and second slidable actuating carriages to respectively advance first and second probe arms of the articulating probe, the second probe arm slidable within the first probe arm.

192. The apparatus of at least one of the preceding claims wherein the first probe arm comprises a plurality of inner links and the second probe comprises a plurality of outer links, wherein the inner and outer links articulate with respect to each other.

193. The apparatus of at least one of the preceding claims wherein the feeding structure comprises at least one elongate lead screw constructed and arranged to be rotated so as to drive actuation of the at least one slidable actuating carriage.

194. The apparatus of at least one of the preceding claims wherein the at least one elongate lead screw comprises two parallel and spaced apart lead screws constructed and arranged to substantially prevent twisting or bending of the base structure.

195. The apparatus of at least one of the preceding claims wherein the one or more stabilizing elements comprise at least one metal mounting plate to which the at least one elongate lead screw is mounted so as to minimize non-linear movement of the at least one slidable actuating carriage with respect to the feeding structure.

196. The apparatus of at least one of the preceding claims wherein the at least one slidable actuating carriages comprise Teflon-coated bushings constructed and arranged to substantially prevent movement of the at least one slideable actuating carriage and cables in directions other than a predetermined motion along the longitudinal axis of the at least one elongate lead screws.

197. The apparatus of at least one of the preceding claims wherein the force transfer mechanism comprises at least one gear connecting the feeding structure to drive the articulating probe and wherein the one or more stabilizing elements comprise helical threads on the at least one gear to increase the connective area between the base structure and the feeding structure.

198. The apparatus of at least one of the preceding claims wherein the force transfer mechanism comprises at least two cables housed within the feeding structure and constructed and arranged to steer a distal end of the at least one elongate probe.

199. The apparatus of at least one of the preceding claims wherein the at least two cables comprises three cables constructed and arranged to steer a distal end of the at least one probe arm in three degrees of freedom.

200. The apparatus of at least one of the preceding claims wherein the at least two cables are constructed and arranged to drive the locking mechanism.

201. The apparatus of at least one of the preceding claims wherein the force transfer mechanism located within the feeding structure comprises a sub-assembly constructed independently from the feeding structure.

202. The apparatus of at least one of the preceding claims wherein the feeding structure is secured to the sub-assembly constructed and arranged to increase the rigidity of the sub¬assembly during articulation of the at least one elongate probe.

203. The apparatus of at least one of the preceding claims wherein the force transfer mechanism comprises at least one rotatable bobbin housed within the feeding structure to drive articulation of the at least one probe arm.

204. The apparatus of at least one of the preceding claims wherein the at least one rotatable bobbin drives articulation of the at least two cables.

205. The apparatus of at least one of the preceding claims wherein the at least one rotatable bobbin is mounted to a mounting plate, the mounting plate further mounted to the sub-assembly.

206. The apparatus of at least one of the preceding claims wherein the sub-assembly further comprises the at least one slidable actuating carriage, the at least two rails, and the at least one elongate lead screw.

207. The apparatus of at least one of the preceding claims wherein the feeding structure is a detachable portion of the base structure, wherein an interface between the feeding structure

and non-detachable portion of the base structure comprises at least one alignment feature that aligns the feeding structure with the base structure.

208. The apparatus of at least one of the preceding claims wherein the at least one alignment feature comprises at least one protrusion of the interface to fixedly engage with at least one alignment slot of the interface.

209. The apparatus of at least one of the preceding claims wherein the at least one alignment feature comprises at least two slots of the interface to interface with at least two alignment pegs of the interface.

210. The apparatus of at least one of the preceding claims wherein the at least one protrusion comprises a vertically oriented alignment plate.

211. The apparatus of at least one of the preceding claims wherein the vertically oriented alignment plate extends across at least one half of a width of the feeding structure.

212. The apparatus of at least one of the preceding claims wherein the at least one alignment feature comprises two or more ball plungers constructed and arranged to engage with the vertically oriented alignment plate so as to further align the vertically oriented alignment plate within an at least one alignment slot and reduce motion of the alignment plate within the at least one alignment slot.

213. The apparatus of at least one of the preceding claims wherein the two or more ball plungers are constructed and arranged to prevent improper orientation of the alignment plate within the at least one alignment slot.

214. The apparatus of at least one of the preceding claims wherein the alignment plate comprises an alignment rib on a face of the alignment plate so as to reduce sliding of the alignment plate across the length of the alignment slot.

215. The apparatus of at least one of the preceding claims wherein the alignment plate comprises a tongue slot at the proximal end of the alignment plate, the tongue slot

constructed and arranged to engage and interlock with an articulating tongue when the articulating tongue engages with the tongue slot, the articulating tongue attached to the non-detachable portion of the base structure.

216. The apparatus of at least one of the preceding claims wherein the interface comprises at least two protrusions and two slots constructed and arranged to interface with each other upon connecting the feeding structure with the non-detachable portion of the base structure, wherein a first protrusion and a second protrusion are horizontally separated from each other by at least a half of the horizontal maximum length of the support structure in order to substantially align the base structure and support structure and prevent a rotating yaw of the support structure.

217. The apparatus at least one of the preceding claims wherein the interface comprises at least two protrusions and two slots constructed and arranged to interface with each other upon connecting the feeding structure to the base structure, wherein a first and second protrusion are located directly about two sides of a first electrical connector in the interface, the first and second protrusions constructed and arranged to mate with first and second slots in the interface, the first electrical connector constructed and arranged to mate with a second electrical connector located in the interface.

218. The apparatus of at least one of the preceding claims wherein the first and second protrusions are tapered to provide fine alignment of the first and second electrical connectors with each other.

219. The apparatus of at least one of the preceding claims wherein the interface comprises one or more horizontally oriented spring-loaded slots and one or more corresponding horizontally oriented pins constructed and arranged to engage the spring-loaded slots upon connecting the feeding structure to the base structure.

220. The apparatus of at least one of the preceding claims wherein a portion of the force transfer mechanism secured within the base structure is driven by at least one force-generating unit.

221. The apparatus of at least one of the preceding claims wherein the at least one force generating unit comprises a motor.

222. The apparatus of at least one of the preceding claims wherein the motor generates force through at least one of a solenoid, valve, cylinder, hydraulic, and pneumatic.

223. The apparatus of at least one of the preceding claims wherein the at least one force-generating unit is housed outside of the detachable feeding structure.

224. The apparatus of at least one of the preceding claims wherein the base structure comprises a base plate, the base plate comprising a stand connecting interface for mounting the base structure to a stand structure.

225. The apparatus of at least one of the preceding claims wherein the stand connecting interface is integrated within the base plate of the base structure.

226. The apparatus of at least one of the preceding claims wherein the stand connecting interface is electrically isolated from the rest of the base structure.

227. The apparatus of at least one of the preceding claims wherein the stand connecting interface comprises at least one of plastic spacers, a key hole slotted plastic isolation plate, and insulated standoffs constructed and arranged to electrically isolate the stand interface from the rest of the base structure.

228. The apparatus of at least one of the preceding claims wherein the one or more stabilizing elements comprises one or more vertically oriented posts extending between the stand connecting interface and a chassis of the base structure.

229. The apparatus of at least one of the preceding claims wherein the vertically oriented posts are constructed of solid metal.

230. The apparatus of at least one of the preceding claims wherein the vertically oriented posts extend from a plate in the chassis.

231. The apparatus of at least one of the preceding claims wherein the base structure comprises a Faraday cage connecting a chassis of the base structure constructed and arranged to prevent undesired electrical interference from external sources and emission to other electrical devices.

232. The apparatus of at least one of the preceding claims further comprising an introducer conduit attached to the support structure, the introducer conduit constructed and arranged to guide the at least one probe arm along a predetermined path.

233. The apparatus of at least one of the preceding claims wherein the introducer conduit is fastened to a bearing block securing the at least one lead screw so as to align the introducer conduit with the at least one slidable actuating carriage.

234. The apparatus of at least one of the preceding claims wherein the force transfer mechanism is constructed and arranged to translate at least about thirty pounds of force while the one or more stabilizing elements substantially limits motion of the at least one probe arm to the driven at least one predetermined degree of motion.

235. An apparatus for driving an articulating probe, the apparatus comprising:

at least one elongate probe arm constructed and arranged to articulate in at least one predetermined degree of motion;

an articulation mechanism constructed and arranged to drive the articulation of the at least one probe arm in the at least one predetermined degree of motion;

a base structure constructed and arranged to remain stationary with respect to the articulation mechanism of the at least one probe arm and to fixedly secure at least a portion of the articulation mechanism, the base structure comprising a support structure extending the articulation mechanism from the base structure to the at least one elongate probe arm, the support structure constructed and arranged to substantially limit motion of the at least one probe arm to the driven at least one predetermined degree of motion;

wherein the at least one probe arm comprises a first probe arm and a second probe arm, the first probe arm enclosing the second probe arm, wherein the articulation mechanism is constructed and arranged to drive the first and second probe arms longitudinally with

respect to each other, and wherein the articulation mechanism comprises a locking mechanism to independently lock or release each of the first and second probe arms in states of rigidity and flexibility, respectively.

236. The apparatus of at least one of the preceding claims wherein the at least one elongate probe arm comprises a steerable distal end.

237. The apparatus of at least one of the preceding claims wherein the at least one degree of motion comprises three degrees of motion about which the steerable distal end can be steered.

238. The apparatus of at least one of the preceding claims wherein the at least one probe arm comprises a proximate end and wherein the base structure comprises a feeding conduit through which the at least one probe arm is fed from the base structure.

239. The apparatus of at least one of the preceding claims wherein the feeding conduit comprises at least one slidable actuating carriage constructed and arranged within the feeding conduit to advance and retract the at least one probe arm.

240. The apparatus of at least one of the preceding claims wherein the at least one slidable actuating carriage comprises first and second slidable actuating carriages to advance the first and second probe arms of the at least one probe arm, the second probe arm slidable within the first probe arm.

241. The apparatus of at least one of the preceding claims wherein the feeding conduit comprises at least two rails on which the at least one slidable actuating carriage slides, the rails constructed and arranged to substantially prevent movement of the actuating carriage and cables in directions other than predetermined motion along the longitudinal axis of the rails.

242. The apparatus of at least one of the preceding claims wherein the at least two rails are parallel and spaced apart so as to substantially prevent twisting or bending of the base structure.

243. The apparatus of at least one of the preceding claims wherein the at least two rails comprise slots constructed and arranged to guide sliding of the at least one slidable actuating carriage.

244. The apparatus of at least one of the preceding claims wherein the at least two rails are cylindrical.

245. The apparatus of at least one of the preceding claims wherein the feeding conduit comprises at least one elongate lead screw constructed and airanged to be rotated so as to drive actuation of the at least one shdable actuating carriage.

246. The apparatus of at least one of the preceding claims wherein the at least one elongate lead screw comprises two lead screws.

247. The apparatus of at least one of &e preceding claims wherein the at least one elongate lead screw is mounted to the feeding conduit with at least one metal plate so as to minimize non-linear movement of the at least one slidable carriage with respect to the feeding conduit

248. The apparatus of at least one of the preceding claims wherein the at least one slidable actuating carriage comprise Teflon-coated bushings constructed and arranged to engage the at least one elongate lead screws.

249. The apparatus of at least one of the preceding claims wherein the at least one lead screws is supported by at least one bearing having a bearing block affixed to the feeding conduit so as to substantially prevent movement of the at least one elongated lead screw other than the rotation for driving actuation of the at least one slidable actuation carriage.

250. The apparatus of at least one of the preceding claims wherein the at least one bearing is a thrust bearing.

251. The apparatus of at least one of the preceding claims wherein the at least one elongated lead screw is supported by at least one spherical bearing so as to self align the lead screw with a bearing block securing the lead screw and substantially preventing movement of

the at least one elongated lead screw other than the rotation for driving actuation of the at least one slidable actuating carriage.

252. The apparatus of at least one of the preceding claims wherein the at least one spherical bearing is located at the distal end of the lead screw and the thrust bearing is located at the proximal end of the lead screw.

253. The apparatus of at least one of the preceding claims wherein the articulation mechanism comprises at least one helical gear to drive the articulation mechanism and to increase the connective area between the support structure and the portion of the articulation mechanism fixedly secured to the base structure.

254. The apparatus of at least one of the preceding claims wherein the at least one helical gear drives actuation of the at least one elongate lead screw.

255. The apparatus of at least one of the preceding claims wherein the articulation mechanism comprises at least two cables housed within the feeding conduit and constructed and arranged to articulate the at least one probe arm.

256. The apparatus of at least one of the preceding claims wherein the articulation mechanism comprises at least two cables housed within the feeding conduit and constructed and arranged to steer a distal end of the at least one probe arm.

257. The apparatus of at least one of the preceding claims wherein the at least two cables comprises three cables constructed and arranged to steer a distal end of the at least one probe arm in three degrees of motion.

258. The apparatus of at least one of the preceding claims wherein the at least two cables are constructed and **arranged** to drive the locking mechanism.

259. The apparatus of at least one of the preceding claims wherein a portion of the articulation mechanism not secured within the base unit comprises a sub-assembly constructed independently from the feeding conduit.

260. The apparatus of at least one of the preceding claims wherein the feeding conduit is secured to the sub-assembly so as to increase the rigidity of the sub-assembly during articulation.

261. The apparatus of at least one of the preceding claims wherein the articulation mechanism comprises at least one rotatable bobbin housed within the feeding unit to drive articulation of the at least one probe arm.

262. The apparatus of at least one of the preceding claims wherein the at least one rotatable bobbin drives articulation of the at least two cables.

263. The apparatus of at least one of the preceding claims wherein the at least one rotatable bobbin is mounted to a mounting plate, the mounting plate further mounted to the sub-assembly.

264. The apparatus of at least one of the preceding claims wherein the sub-assembly further comprises the at least one slidable actuating carriage, the at least two rails, and the at least one elongate lead screw.

265. The apparatus of at least one of the preceding claims wherein the mounting plate comprises alignment features that align the mounting plate with the base structure.

266. The apparatus of at least one of the preceding claims wherein the alignment features comprises at least one slot constructed to fixedly engage with at least one protrusion of the base structure.

267. The apparatus of at least one of the preceding claims wherein the at least one protrusion of the base structure comprises two or more alignment pegs.

268. The apparatus of at least one of the preceding claims wherein the alignment features comprises at least one protrusion constructed to fixedly engage with at least one slot of the base structure.

269. The apparatus of at least one of the preceding claims wherein the at least one protrusion comprises an alignment plate substantially orthogonal to the mounting plate.

270. The apparatus of at least one of the preceding claims wherein the alignment plate extends across at least one half of a width of the mounting plate.

271. The apparatus of at least one of the preceding claims wherein the at least one alignment slot comprises ball plungers constructed and arranged to engage with the alignment plate so as to further align the alignment plate within the at least one alignment slot and reduce motion of the alignment plate within the at least one alignment: slot.

272. The apparatus of at least one of the preceding claims wherein the ball plungers are constructed and arranged to prevent improper orientation of the alignment plate within the at least one alignment slot.

273. The apparatus of at least one of die preceding claims wherein the alignment plate comprises an alignment rib on a face of the alignment plate so as to reduce sliding of the alignment plate across the length of the at least one alignment slot.

274. The apparatus of at least one of the preceding claims wherein the alignment plate comprises a tongue slot at the proximal end of the alignment plate, the tongue slot constructed and arranged to engage and interlock with an articulating tongue when the articulating tongue engages with the tongue slot, the articulating tongue attached to the base unit so as to substantially prevent a rotating pitch of the support structure.

275. The apparatus of at least one of the preceding claims wherein the portion of the articulation mechanism comprises at least one force-generating unit and wherein the support structure comprises at least one force translating unit driven by the at least one force-generating unit

276. The apparatus of at least one of the preceding claims wherein the at least one force generating unit comprises a motor.

277. The apparatus of at least one of the preceding claims wherein the motor generates force through at least one of a solenoid, valve, cylinder, hydraulic, and pneumatic.

2?8. The apparatus of at least one of the preceding claims wherein the at least one force translating unit is constructed and arranged to translate at least about thirty pounds of force while the support structure substantially limits motion of the at least one probe arm to the driven at least one predetennined degree of motion.

279. The apparatus of at least one of the preceding claims wherein the base structure comprises a feeding structure separable from the base structure and a mounting interface for connecting the base structure and feeding structure together.

280. The apparatus of at least one of the preceding claims wherein the mounting interface comprises at least two protrusions and two slots constructed and arranged to interface with each other upon connecting the base structure with the feeding structure, wherein a first protrusion and a second protrusion are horizontally separated from each other by at least a half of the horizontal maximum length of the feeding in order to substantially align the base structure and feeding structure and prevent a rotating yaw of the base structure.

281. The apparatus at least one of the preceding claims wherein the first and second protrusions are located about two sides of a first electrical connector in the mounting interface, the first and second protrusions constructed and arranged to mate with first and second slots in the mounting interface, the first electrical connector constructed and arranged to mate with a second electrical connector located in the mounting interface.

282. The apparatus of at least one of the preceding claims wherein the first and second protrusions are tapered to provide fine alignment of the first and second electrical connectors with each other.

283. The apparatus of at least one of the preceding claims wherein the mounting interface comprises one or more horizontally oriented spring-loaded slots and one or more

corresponding horizontally oriented pins constructed and arranged to engage the one or more spring-loaded slots upon connecting the base structure with the feeding structure.

284. The apparatus of at least one of the preceding claims wherein the base structure comprises a ground connecting interface for mounting the base structure to a ground-fixed structure.

285- The apparatus of at least one of the preceding claims wherein The ground connecting interface is integrated within a plate of the base structure.

286. The apparatus of at least one of the preceding claims wherein the ground connecting interface is electrically isolated from the rest of the base structure.

287. The apparatus of at least one of the preceding claims wherein the ground connecting interface comprises at least one of plastic spacers, a key hole slotted plastic isolation plate, and insulated standoffs in order to electrically isolate the stand interface from the rest of the base structure.

288. The apparatus of at least one of the preceding claims wherein the support structure comprises one or more vertically oriented beams extending between the ground correcting interface and a chassis of the base structure.

289. The apparatus of at least one of the preceding claims wherein the one or more vertically oriented beams are constructed of solid metal.

290. The apparatus of at least one of the preceding claims wherein the one or more vertically oriented beams extend from a plate.

291. The apparatus of at least one of the preceding claims wherein the base structure comprises a Faraday cage cornnecting a chassis of the base structure with the ground connect ng interface constructed and arranged to prevent undesired electrical interference from external sources and emission to other electrical devices.

RECTIFIED SHEET (RULE 91)

292: The apparatus of at least one of the preceding claims further comprising an introducer conduit attached to the base structure, the introducer conduit constructed and arranged to guide the at least one probe arm along a predetennined path.

293. The apparatus of at least one of the preceding claims wherein the introducer conduit is fastened to the at least one metal plate the at least one lead screw so as to align the introducer conduit with the at least one slidable carriage.

294. An apparatus for driving an articulating probe as described in reference to the figures.

295. A method for driving an articulating probe as described in reference to the figures.

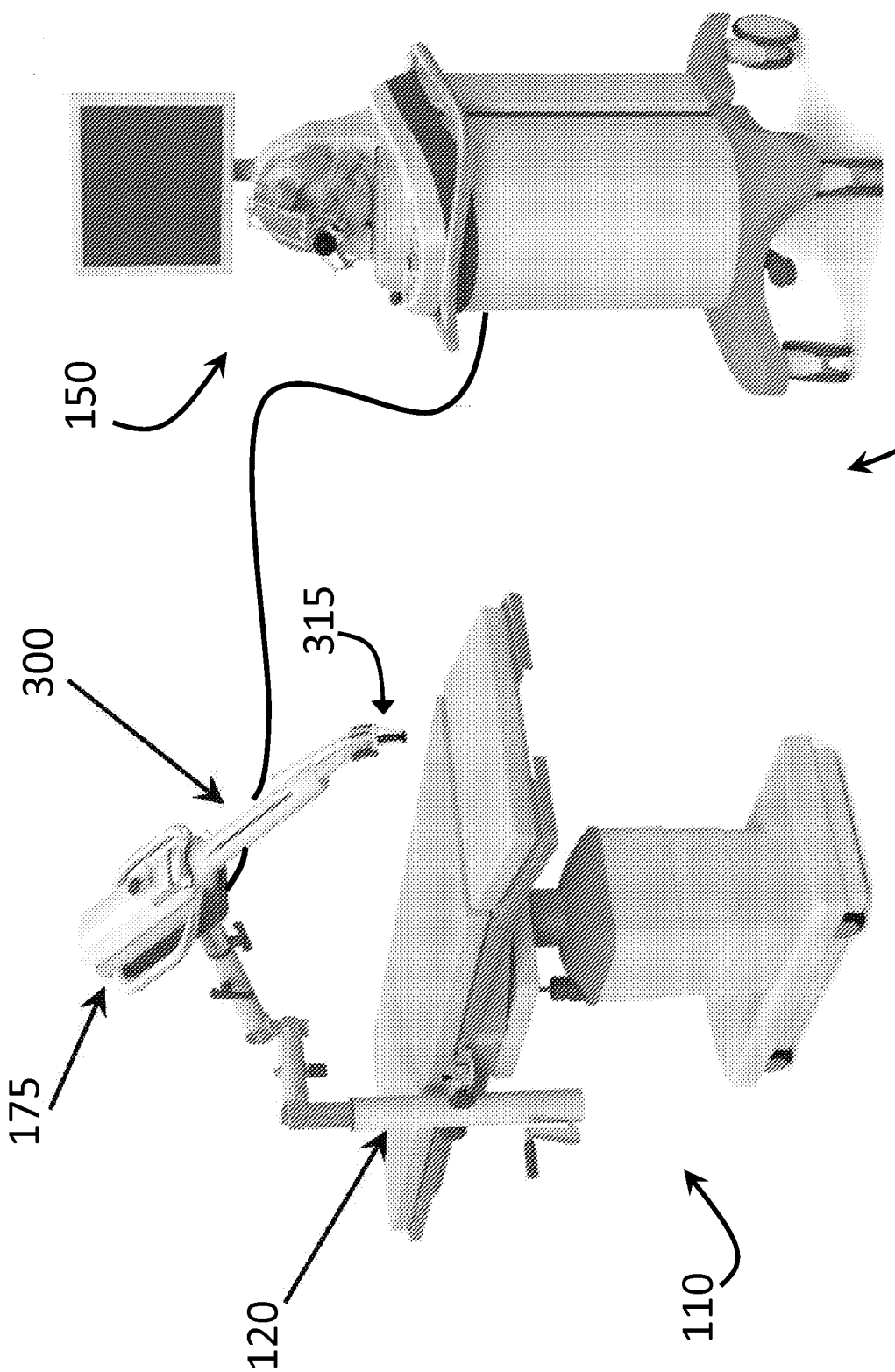

FIG. 1A

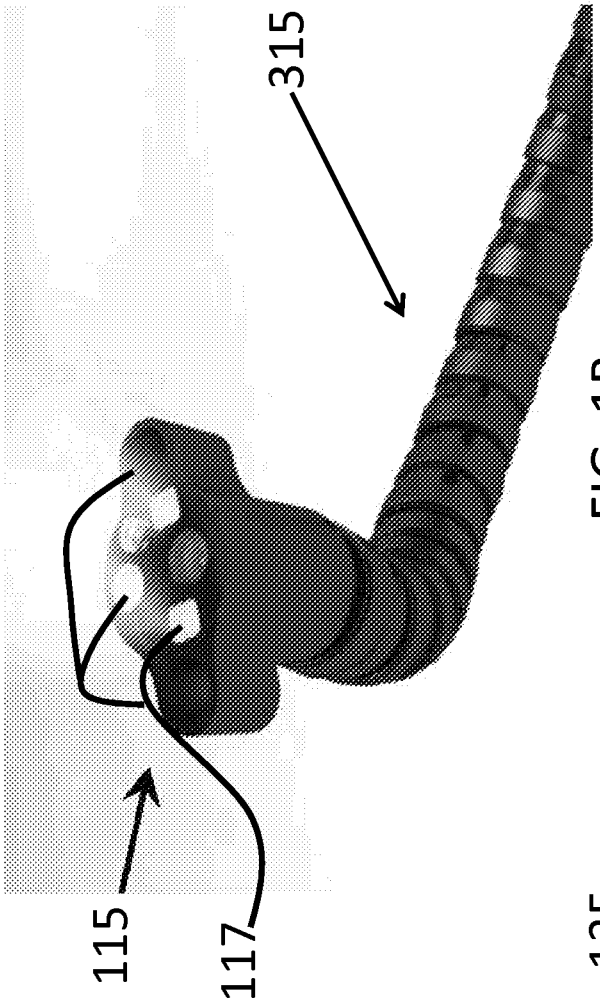

FIG. 1B

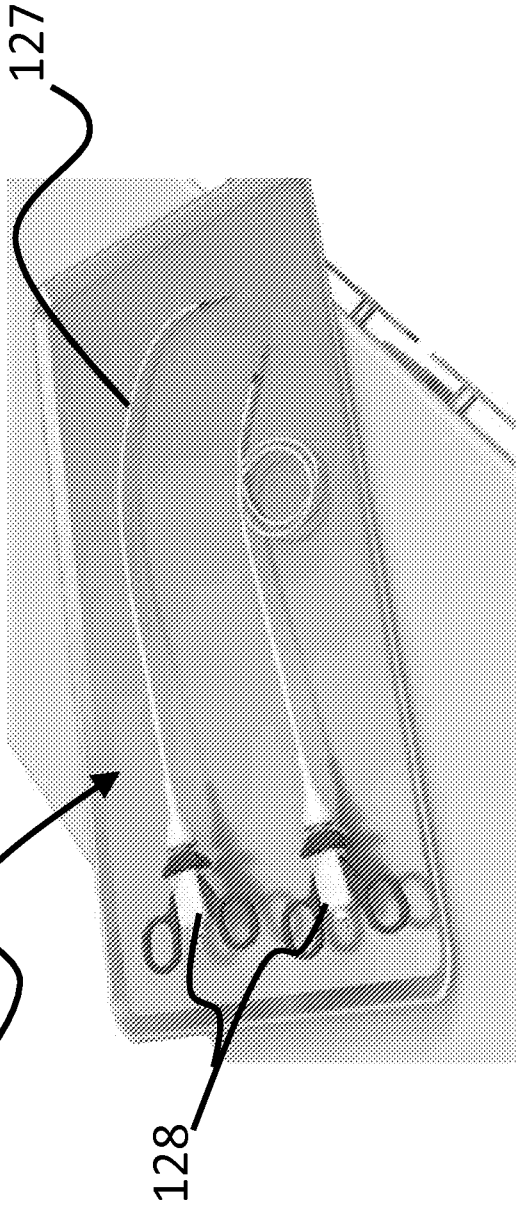

FIG. 1C

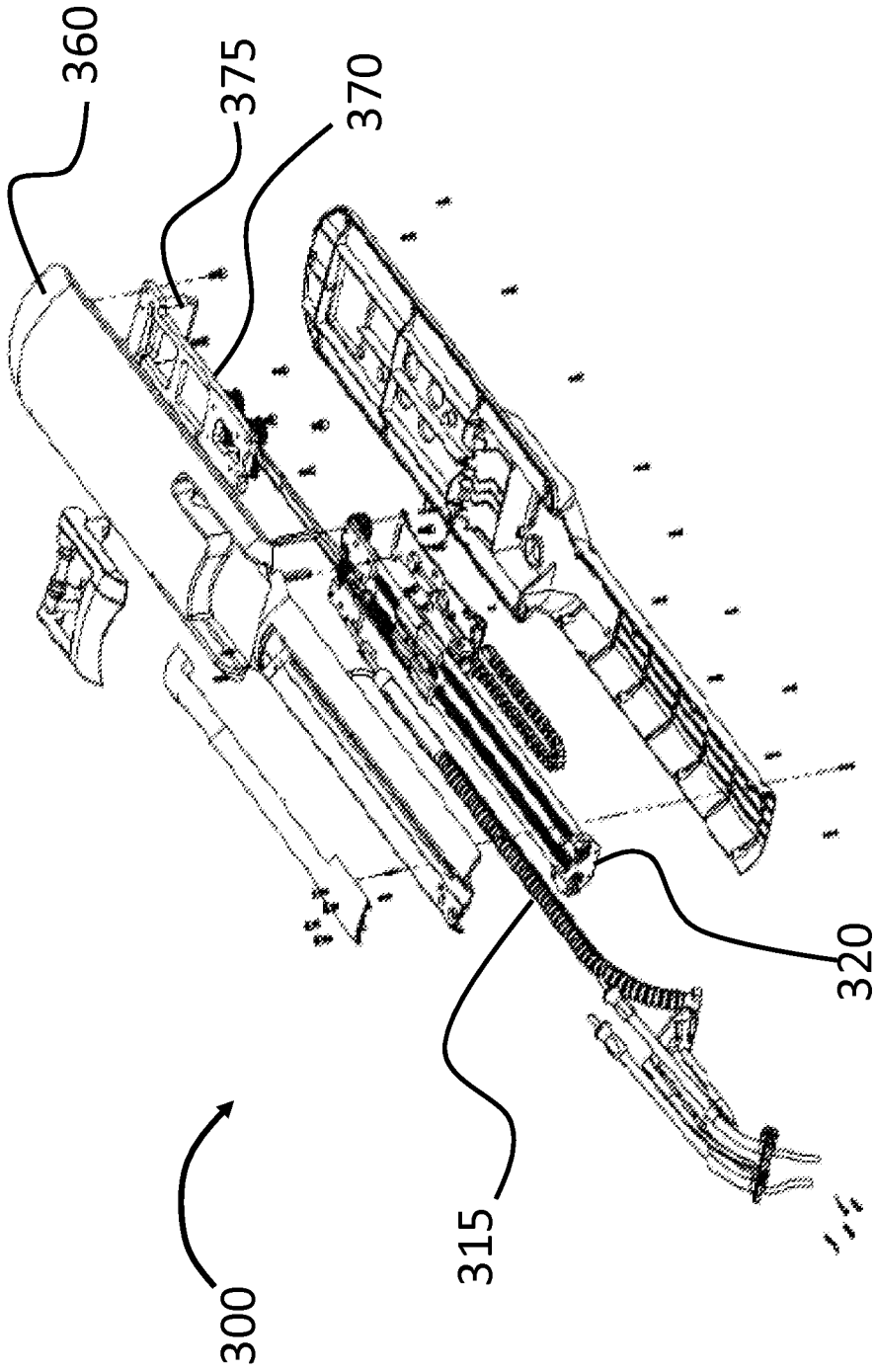

FIG. 2A

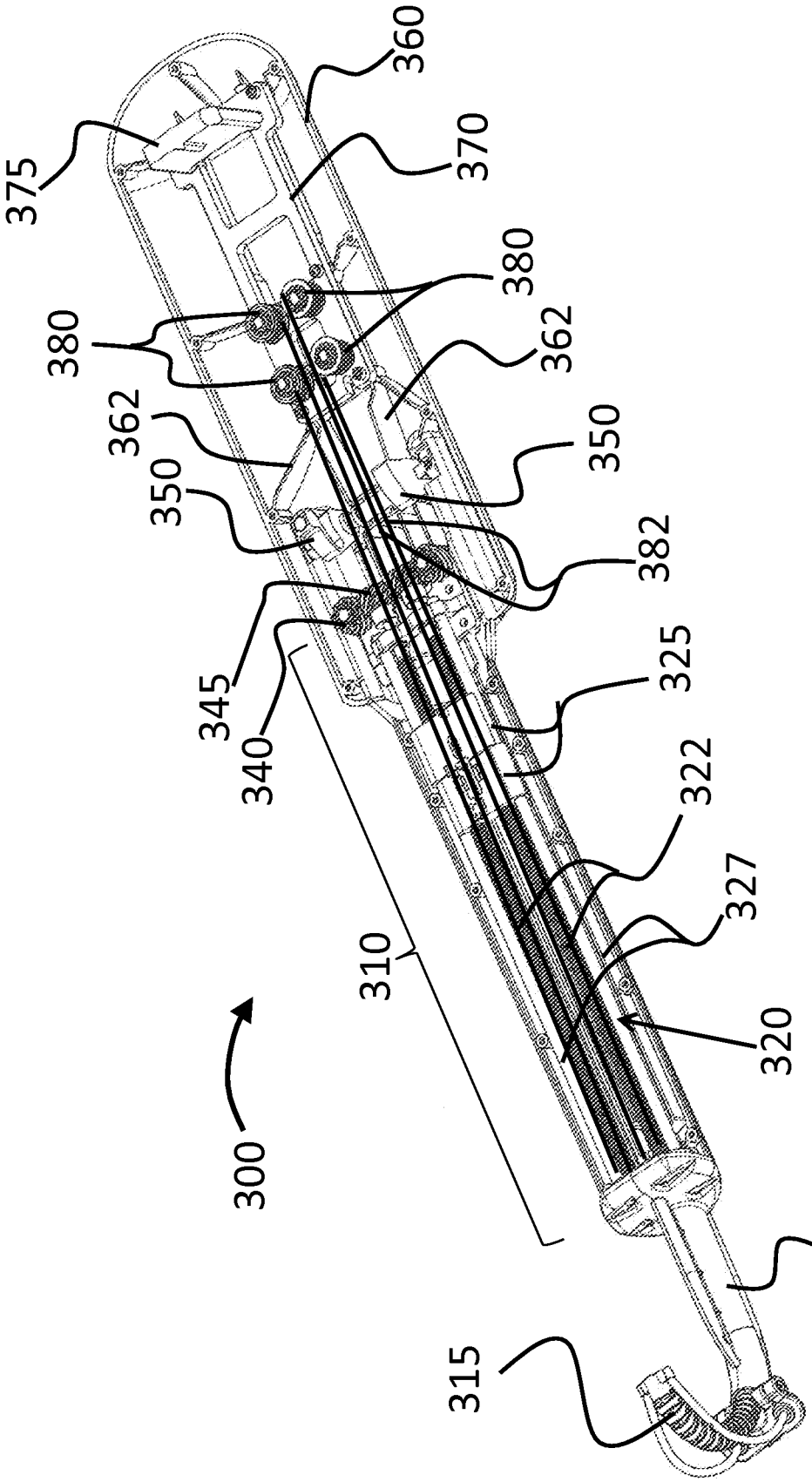
360
375
370
380
380
362
362
350
350
382
345
325
340
322
327
310
320
300
314
315

FIG. 2B

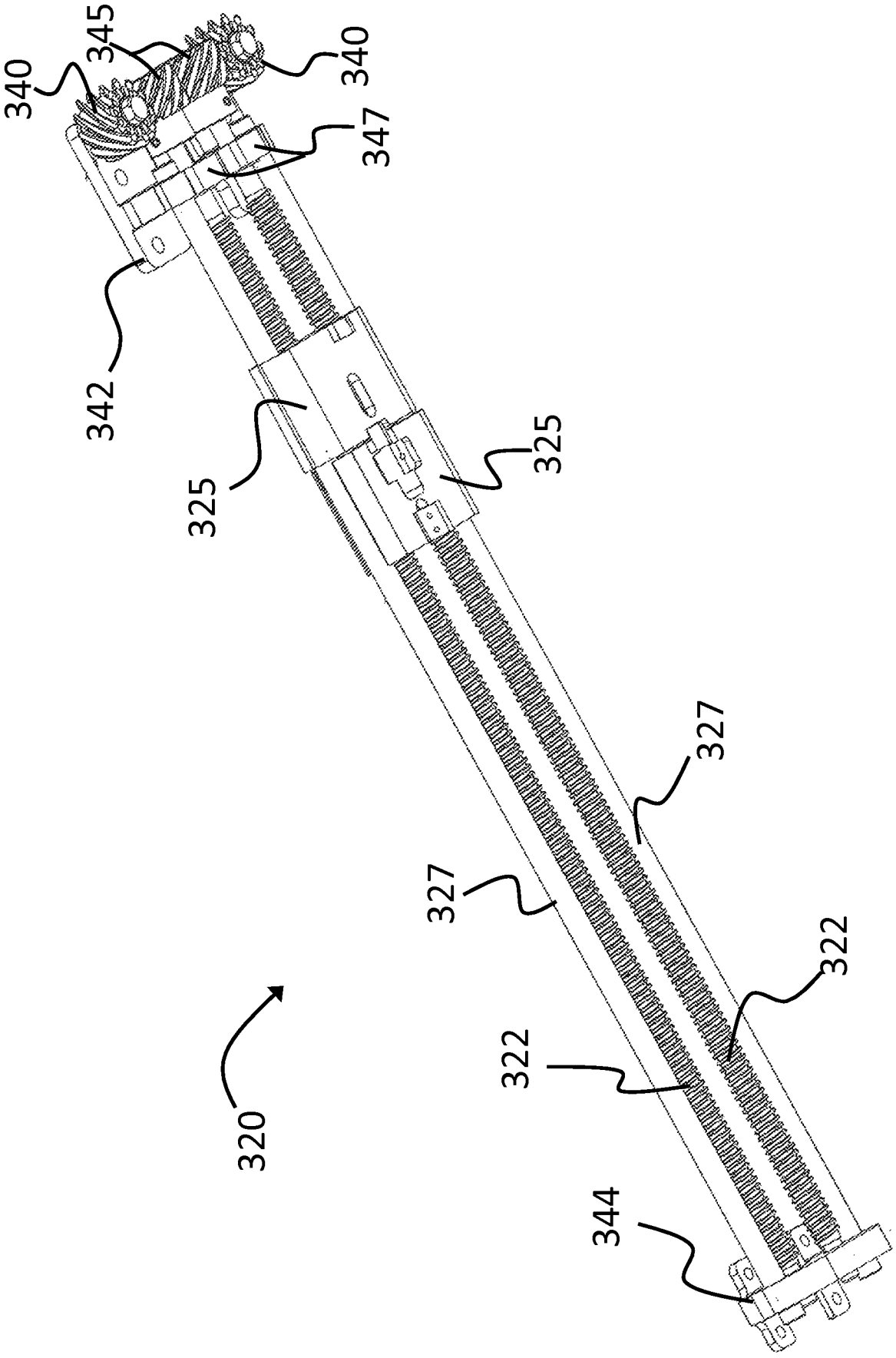

FIG. 3A

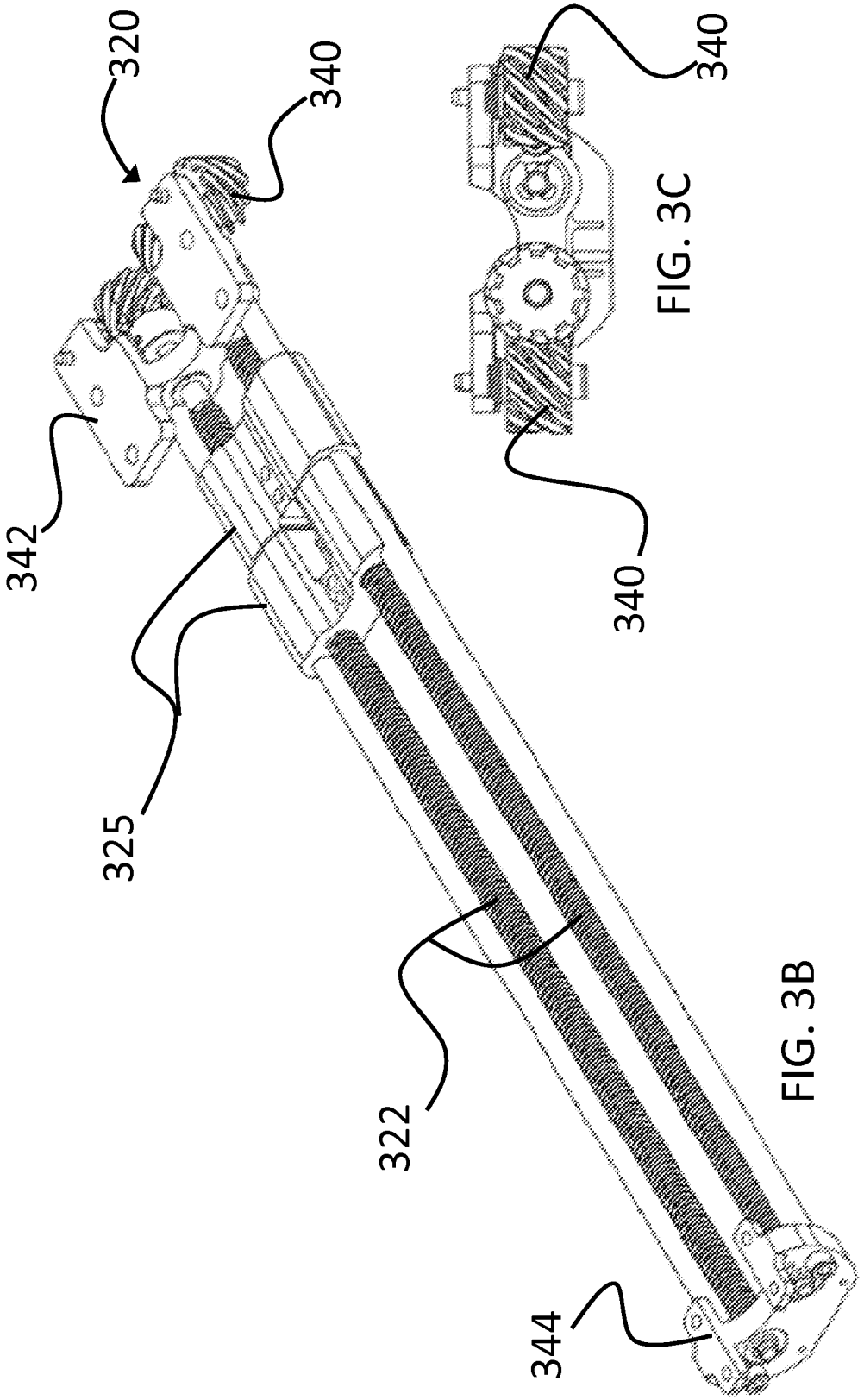

FIG. 3B

FIG. 3C

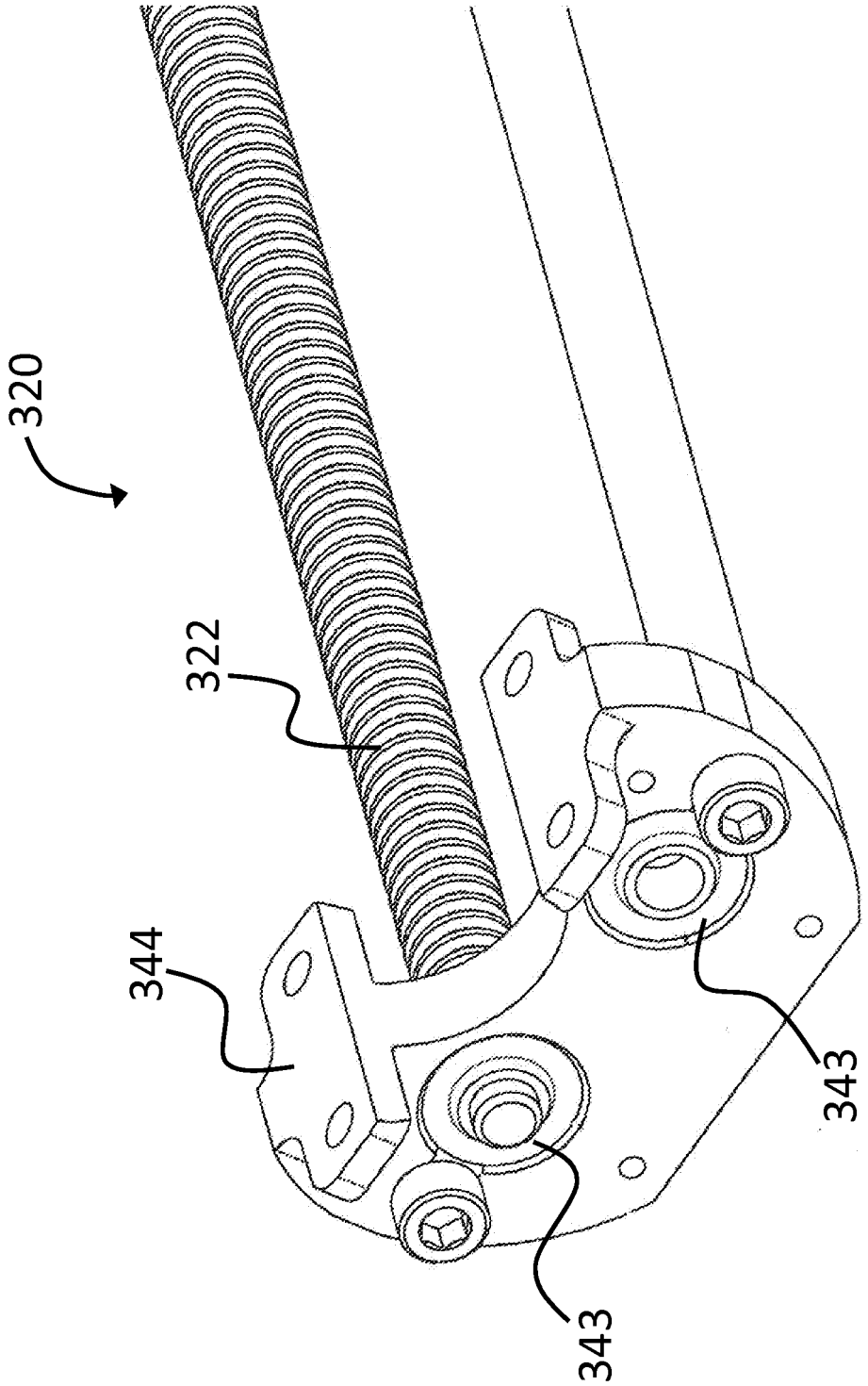

FIG. 3D

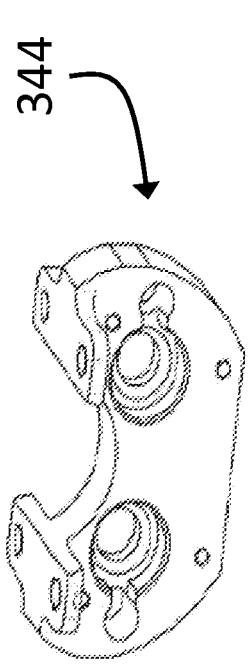

FIG. 3E

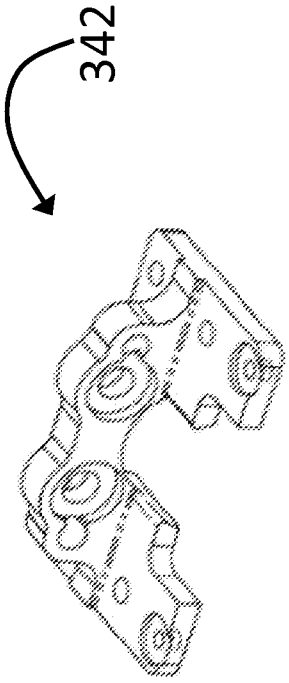

FIG. 3F

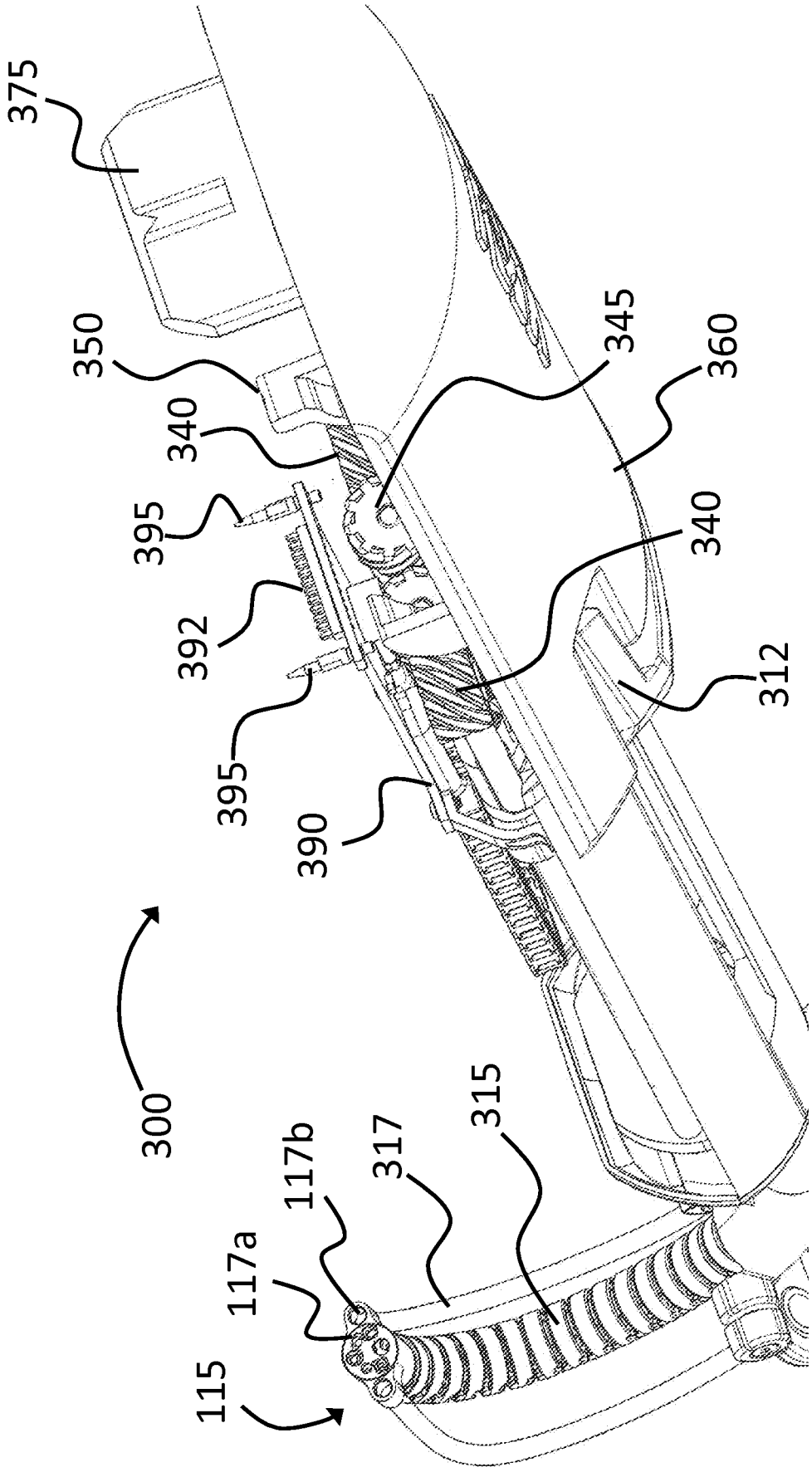
375
350
340
345
360
395
340
392
312
395
390
300
315
317
117b
117a
115

FIG. 4A

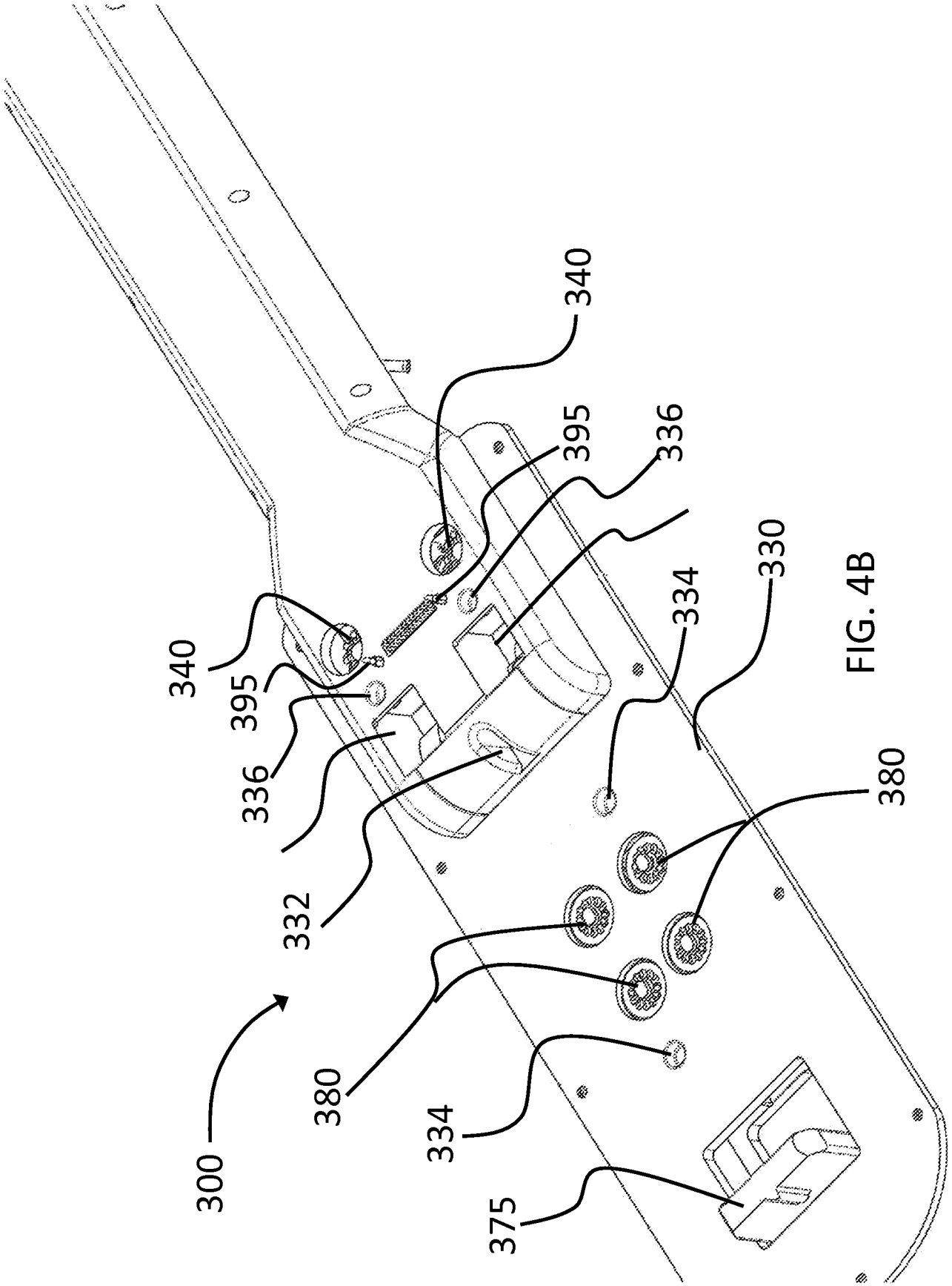

FIG. 4B

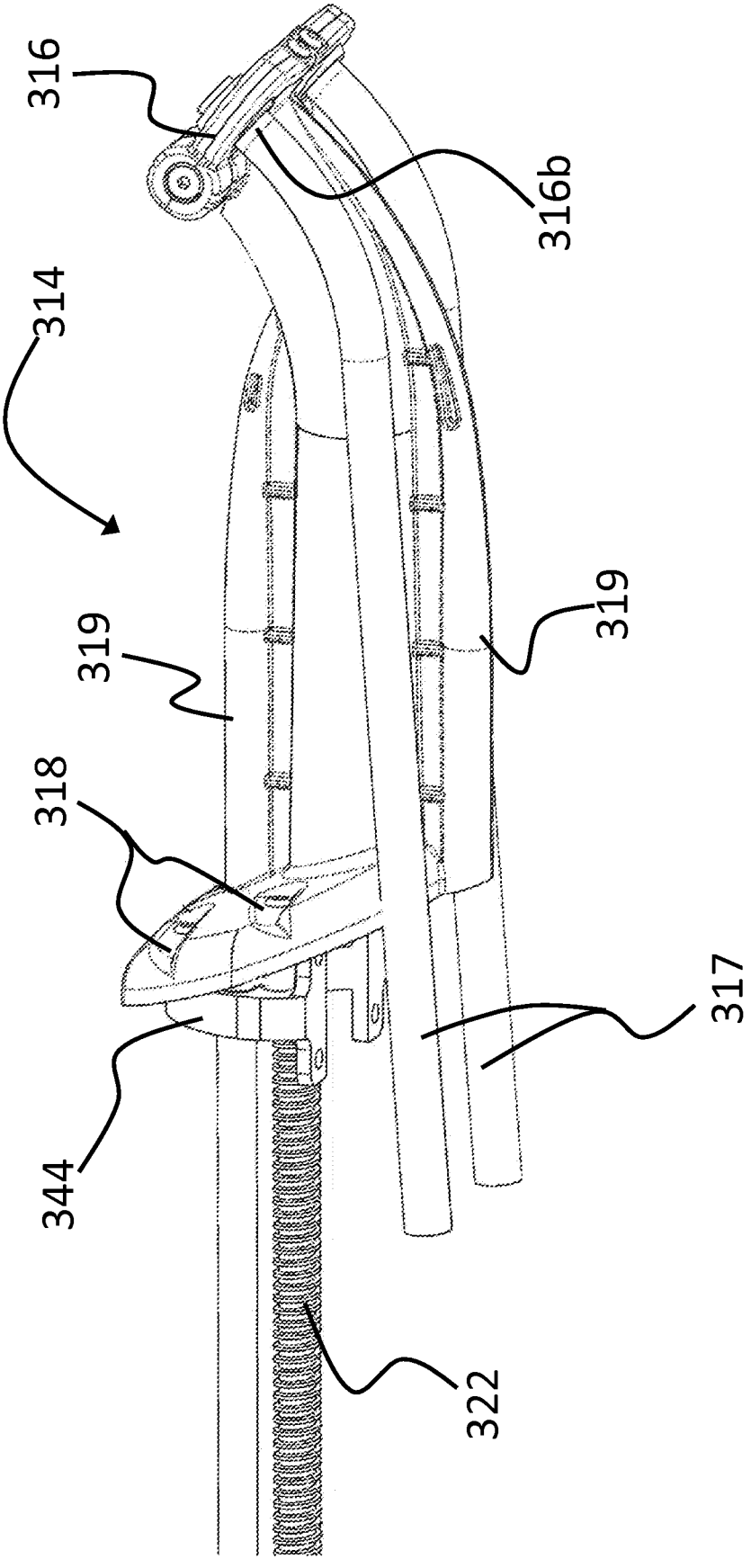

FIG. 4C

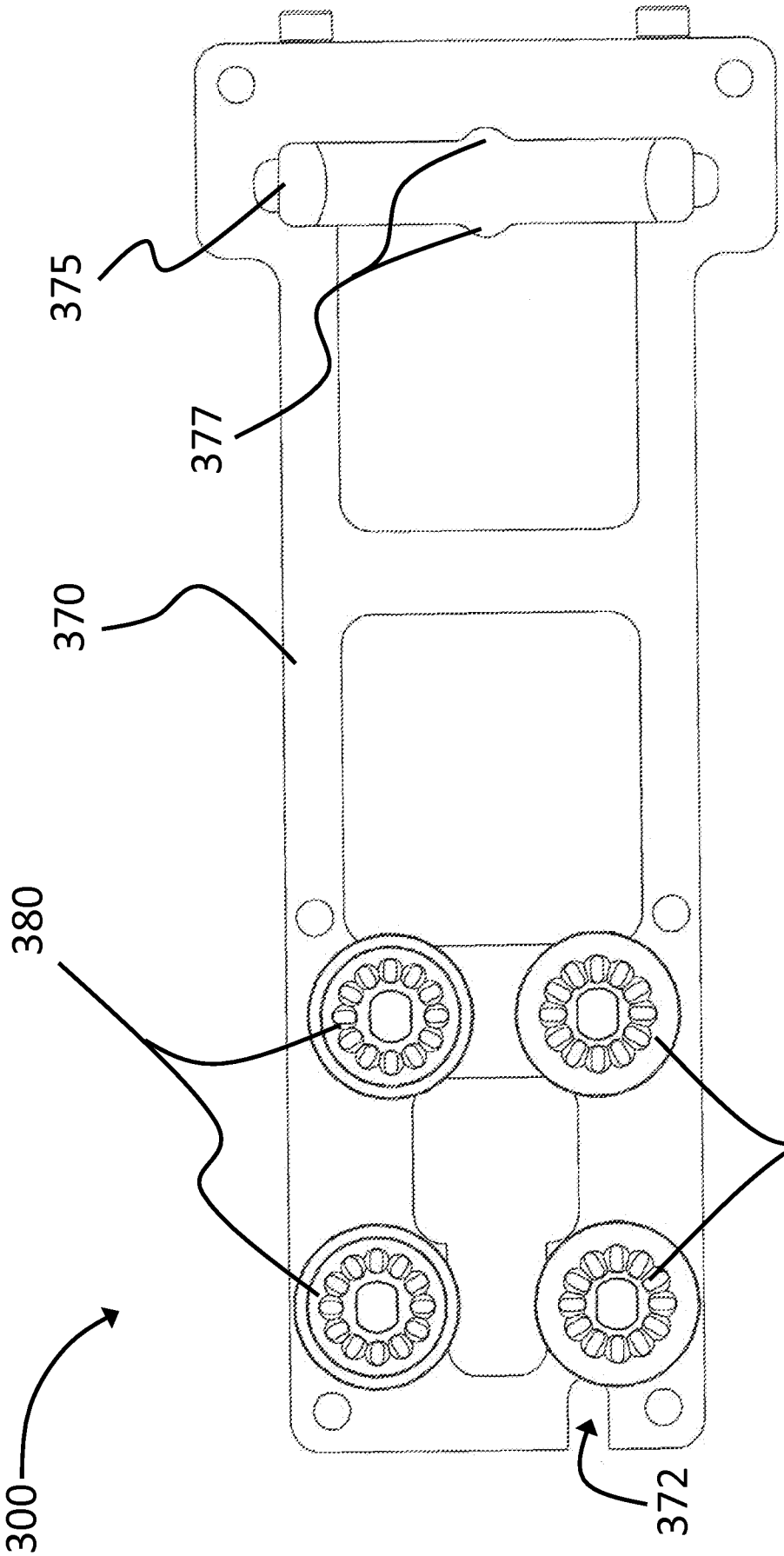

FIG. 5A

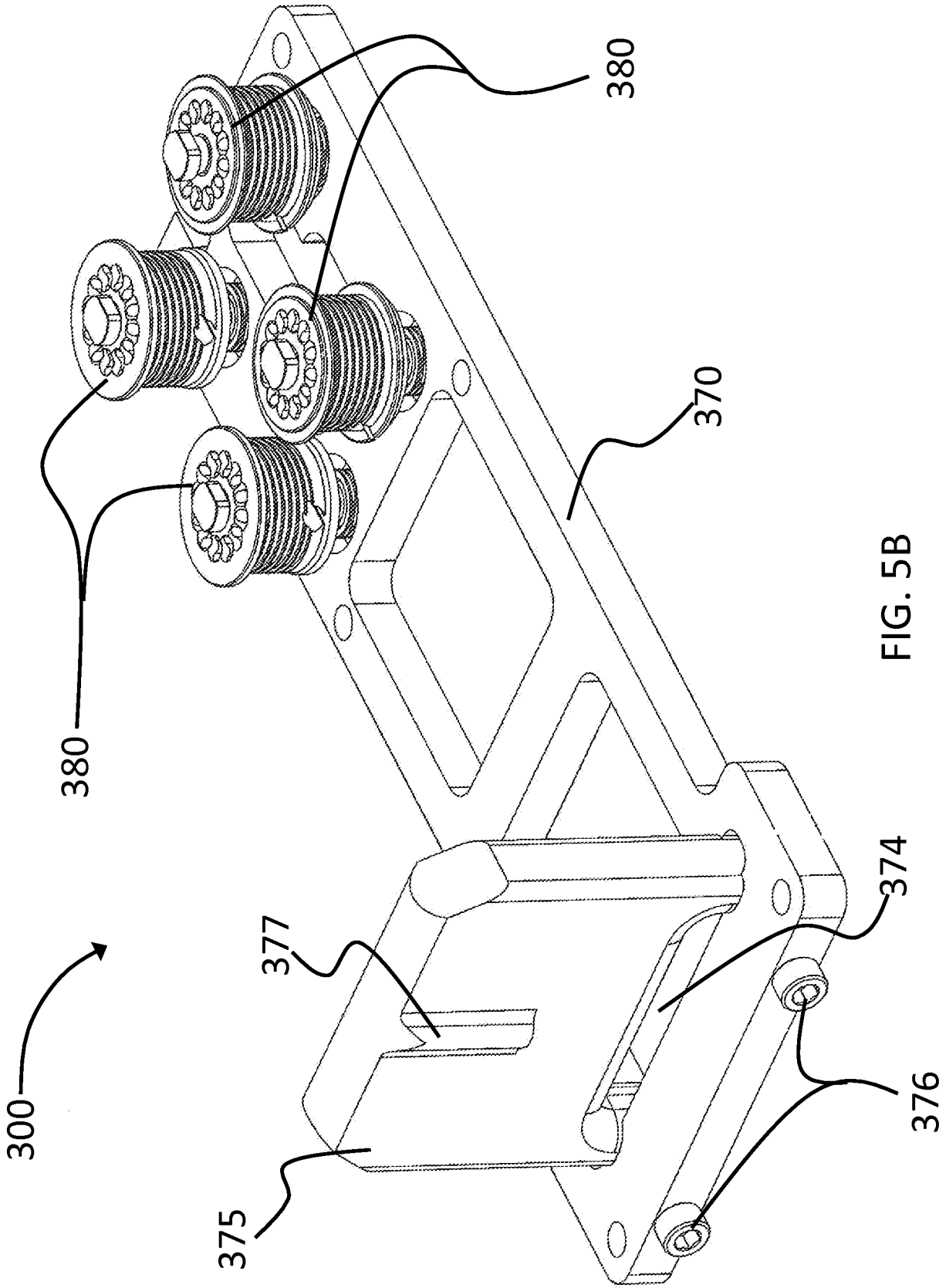

FIG. 5B

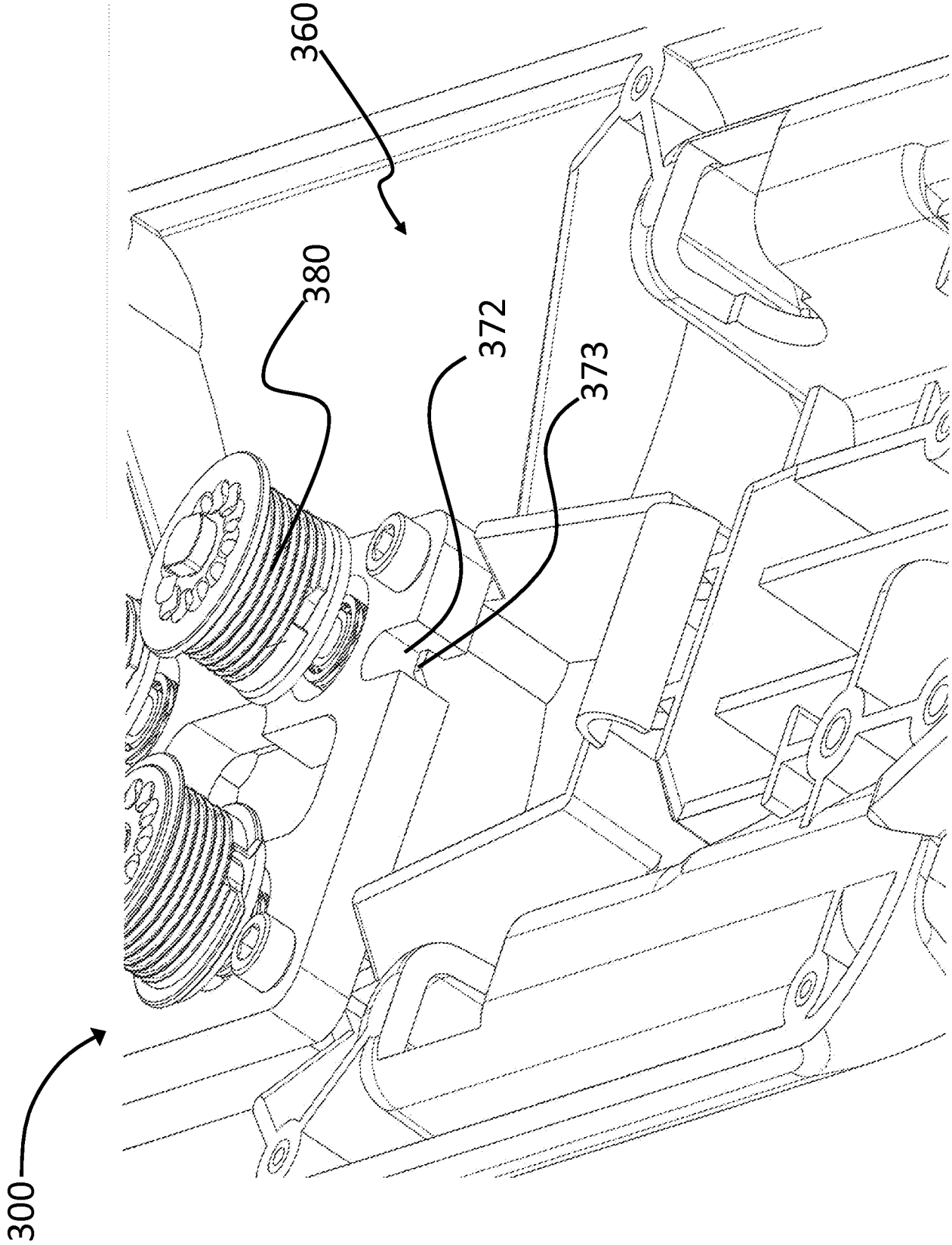

FIG. 5C

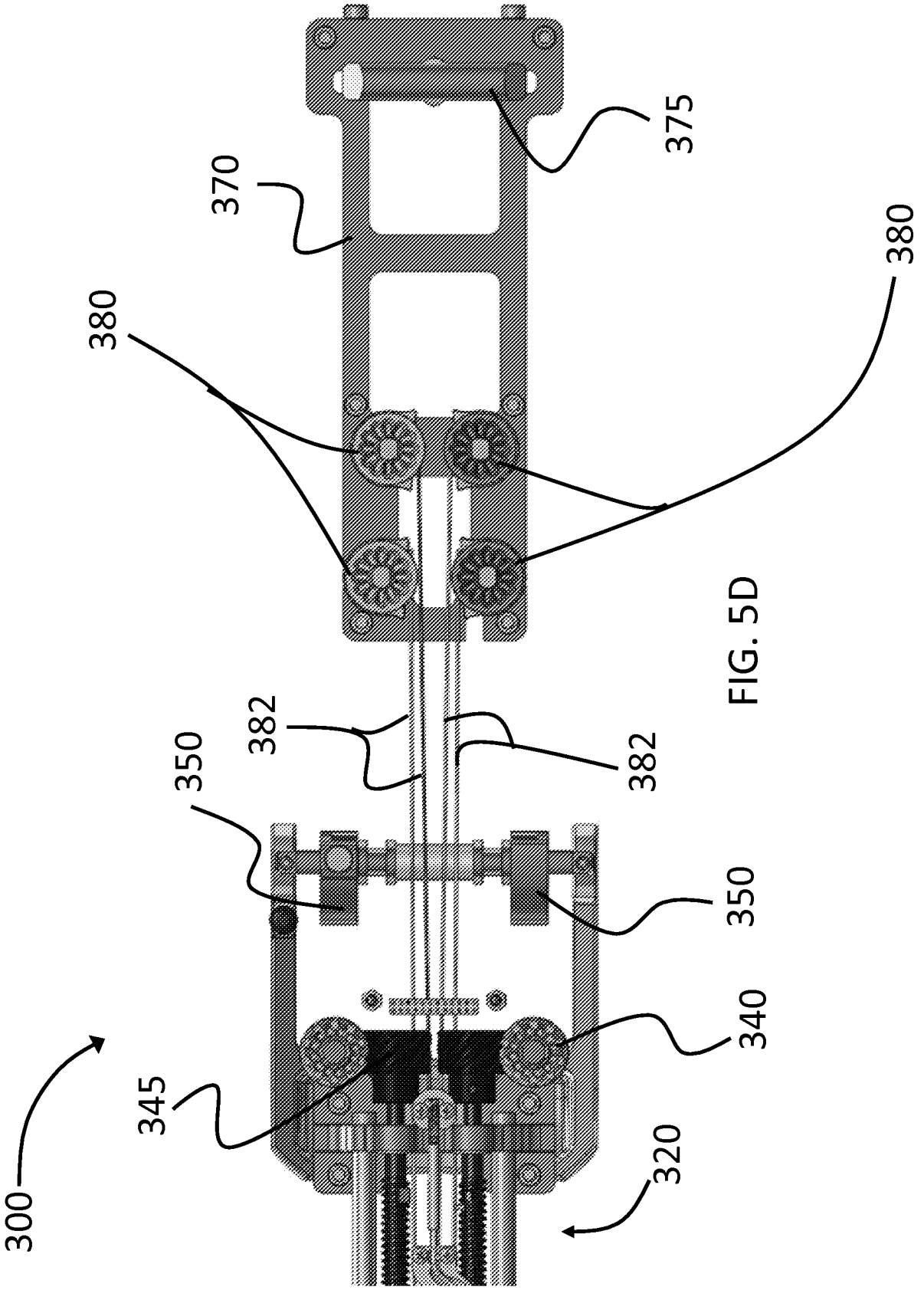

FIG. 5D

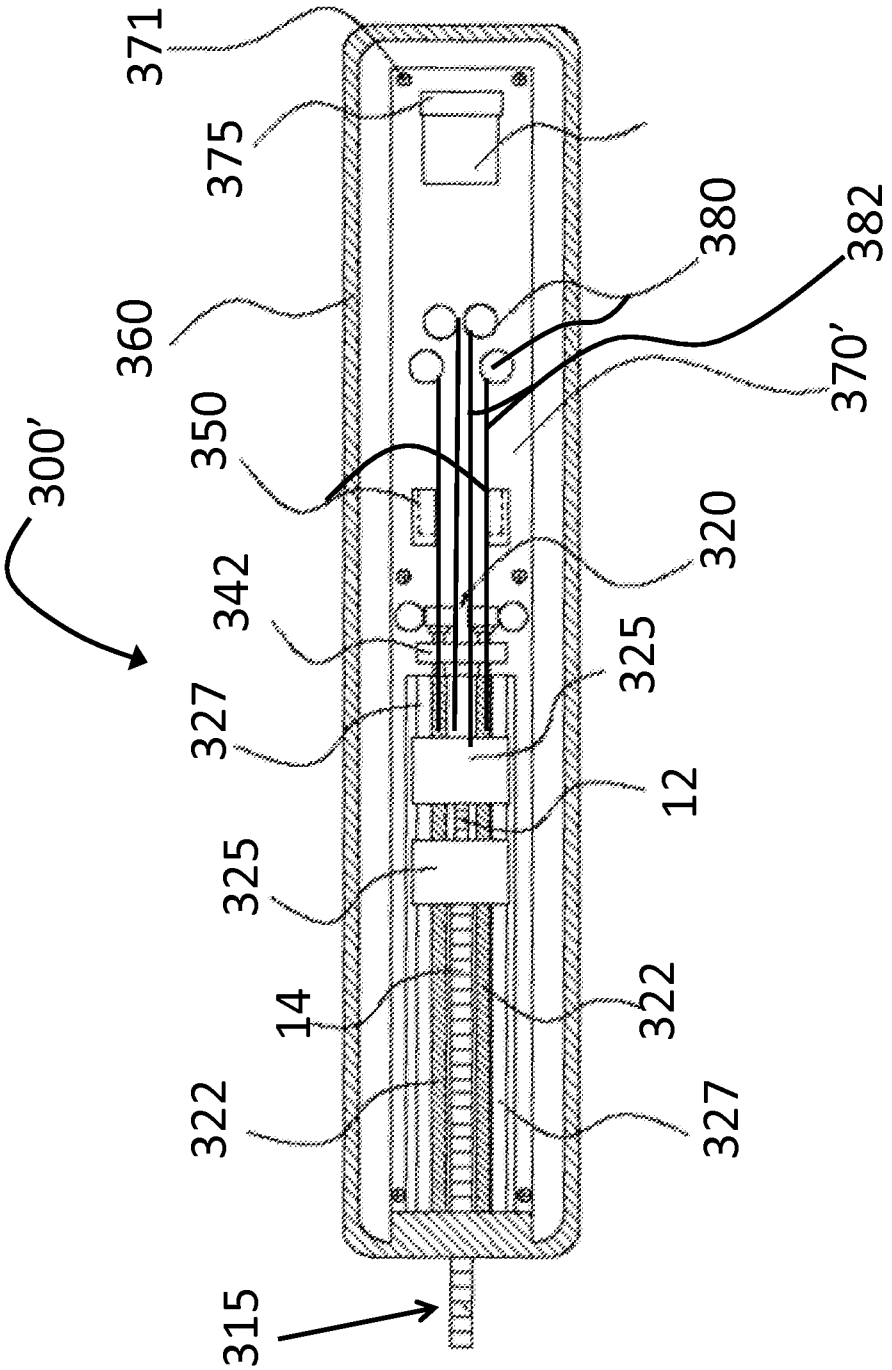
371
375
380
382
360
370'
350
300'
320
342
325
327
12
325
14
322
322
327
315

FIG. 6

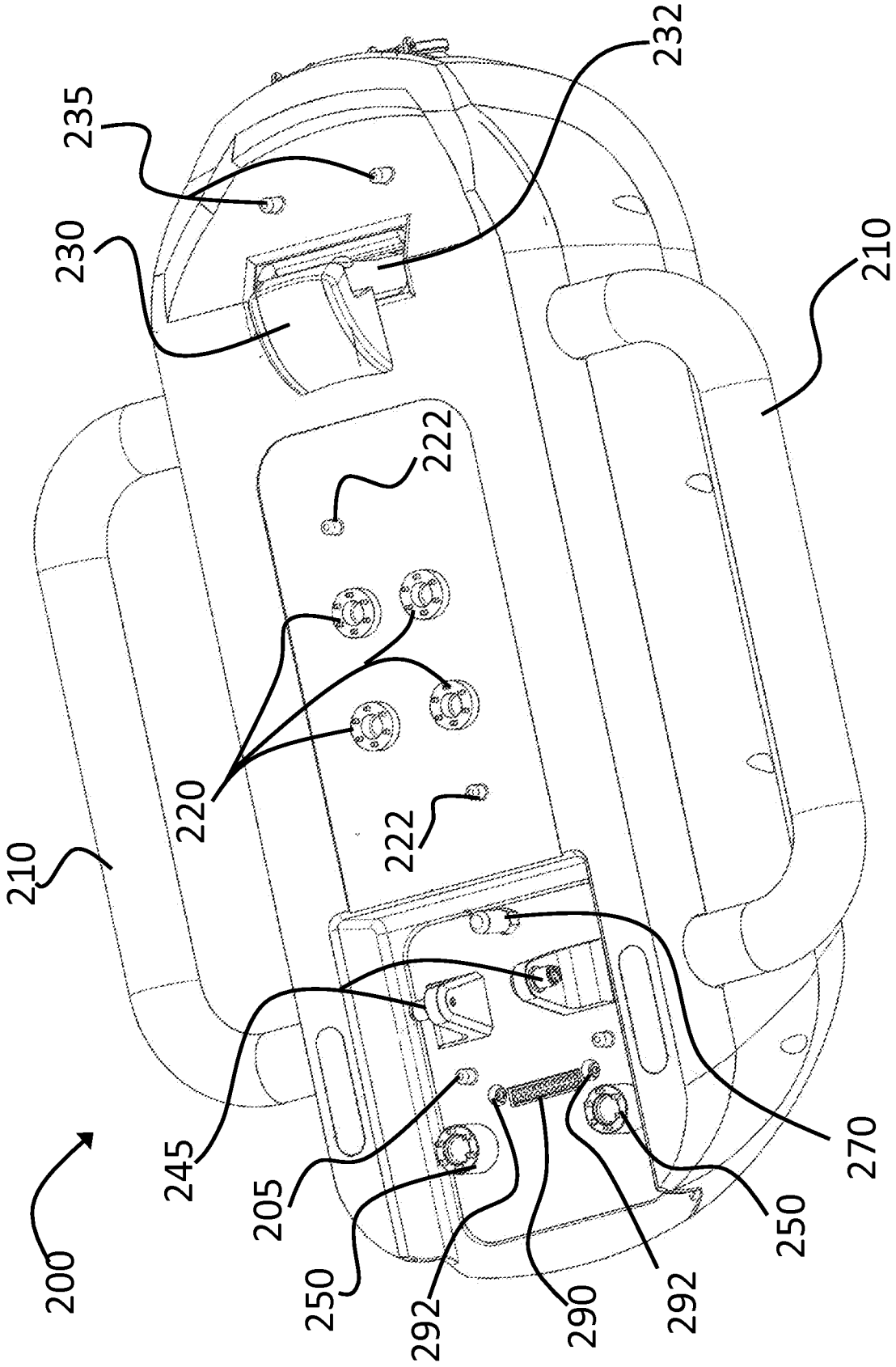
235
232
230
210
222
220
222
210
245
205
250
292
290
292
250
270
200

FIG. 7A

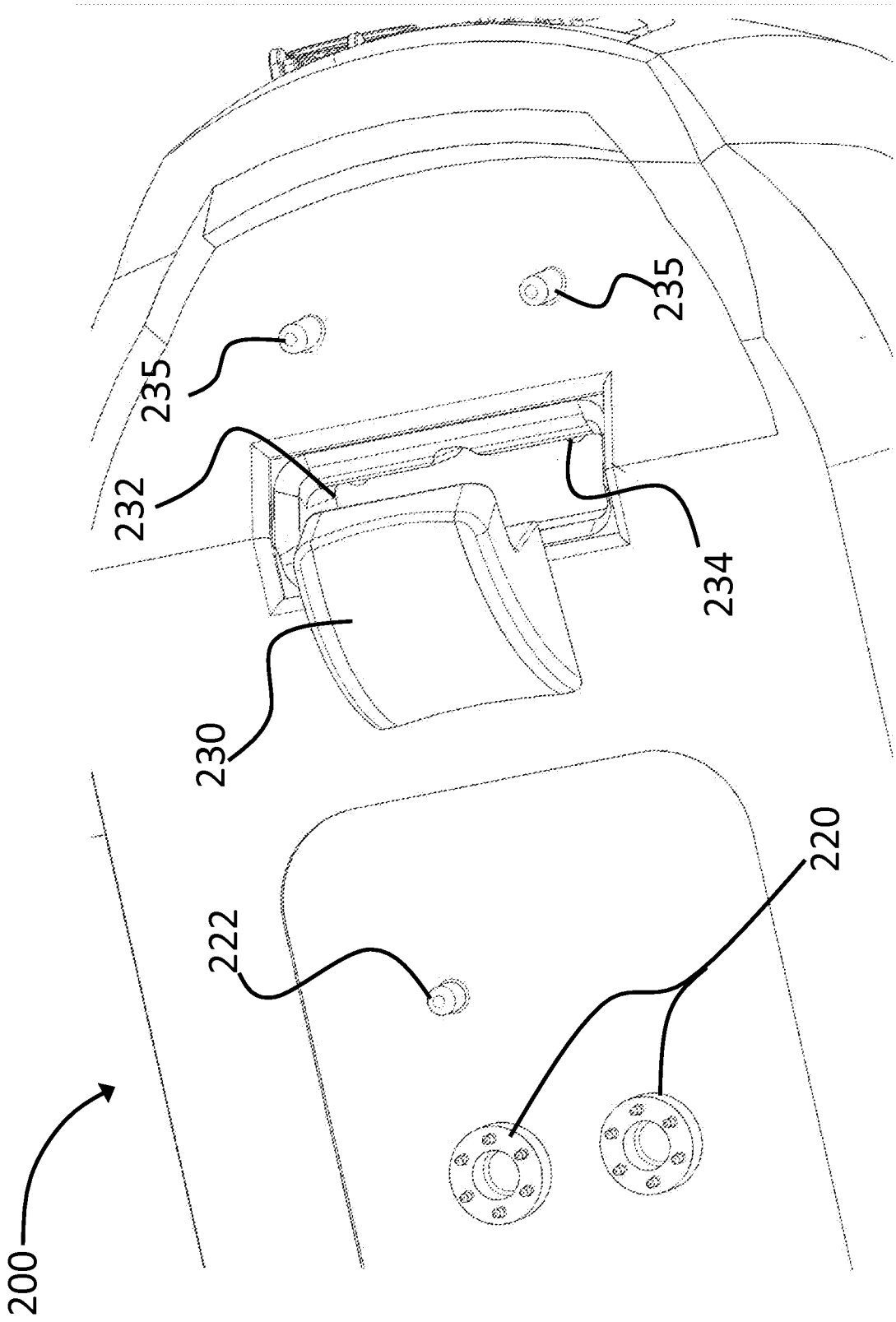

FIG. 7B

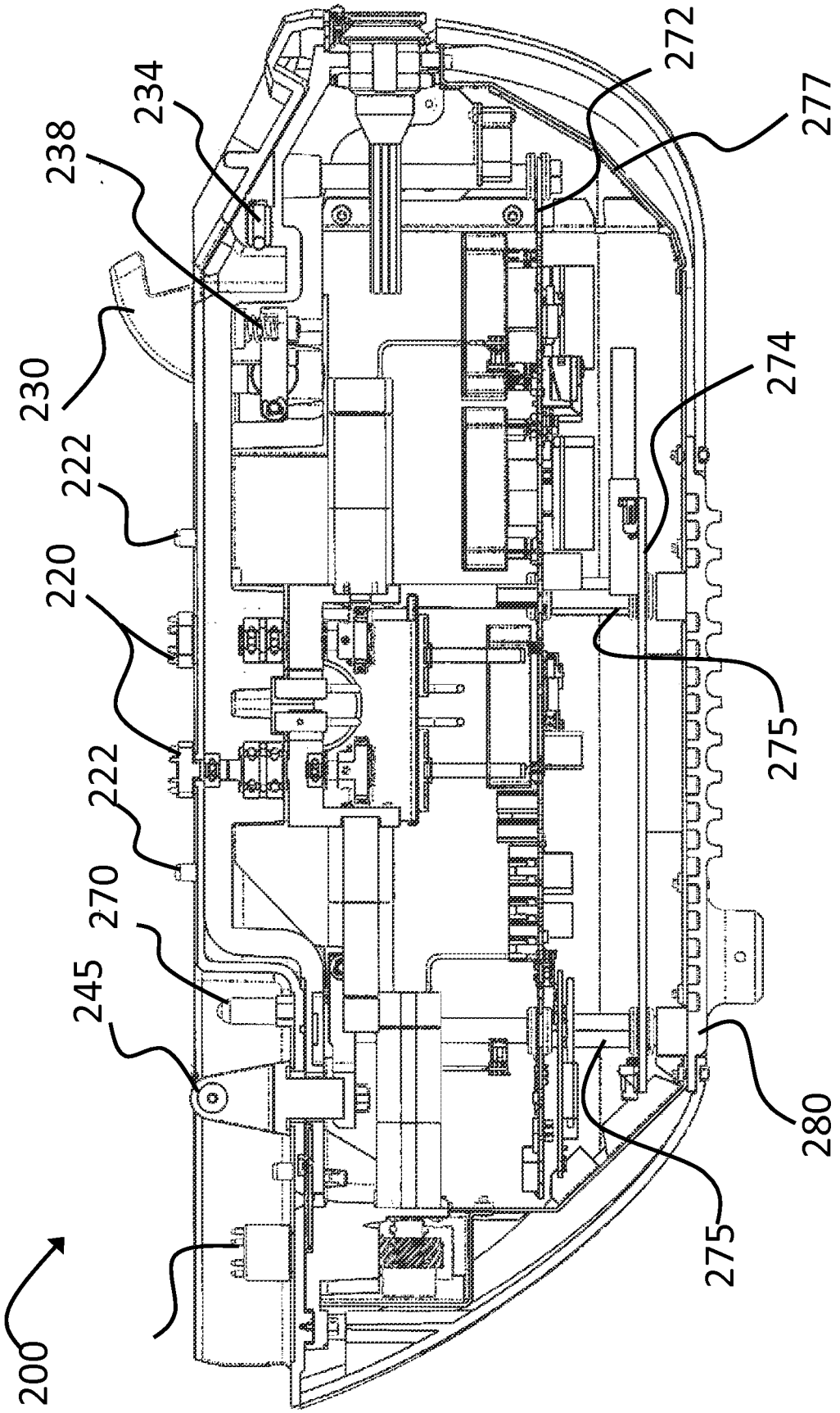

FIG. 8

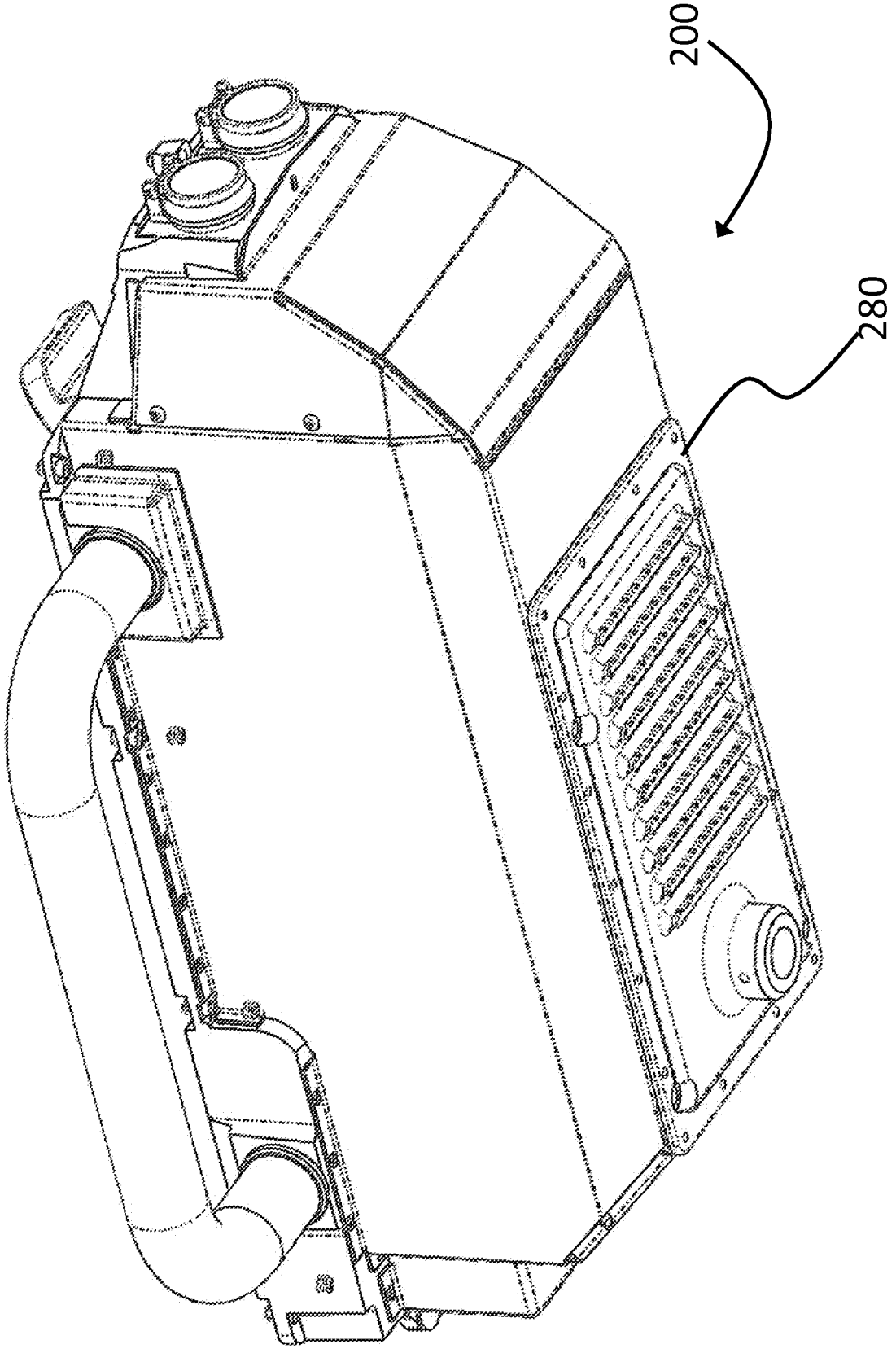

FIG. 9

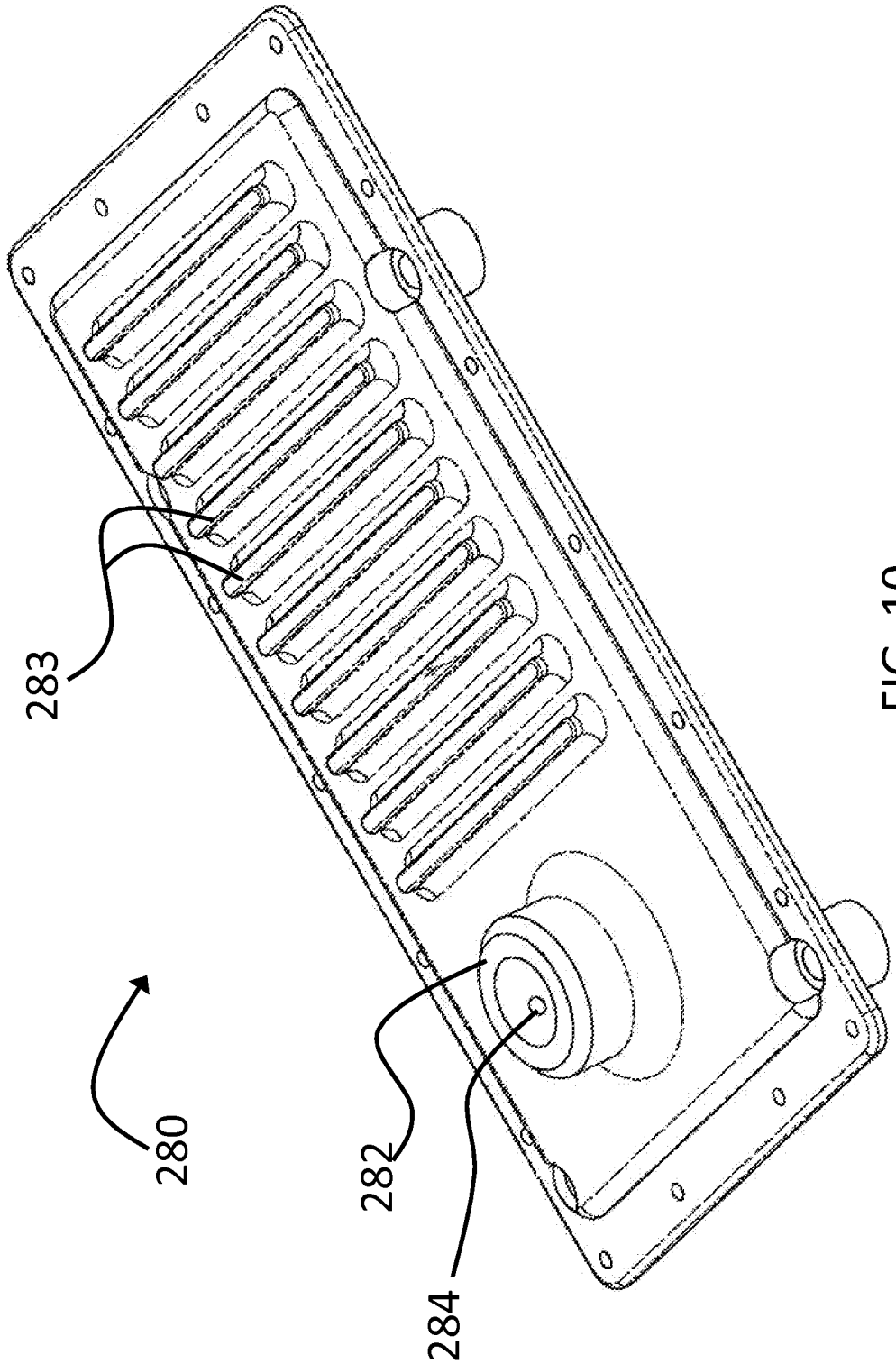

FIG. 10

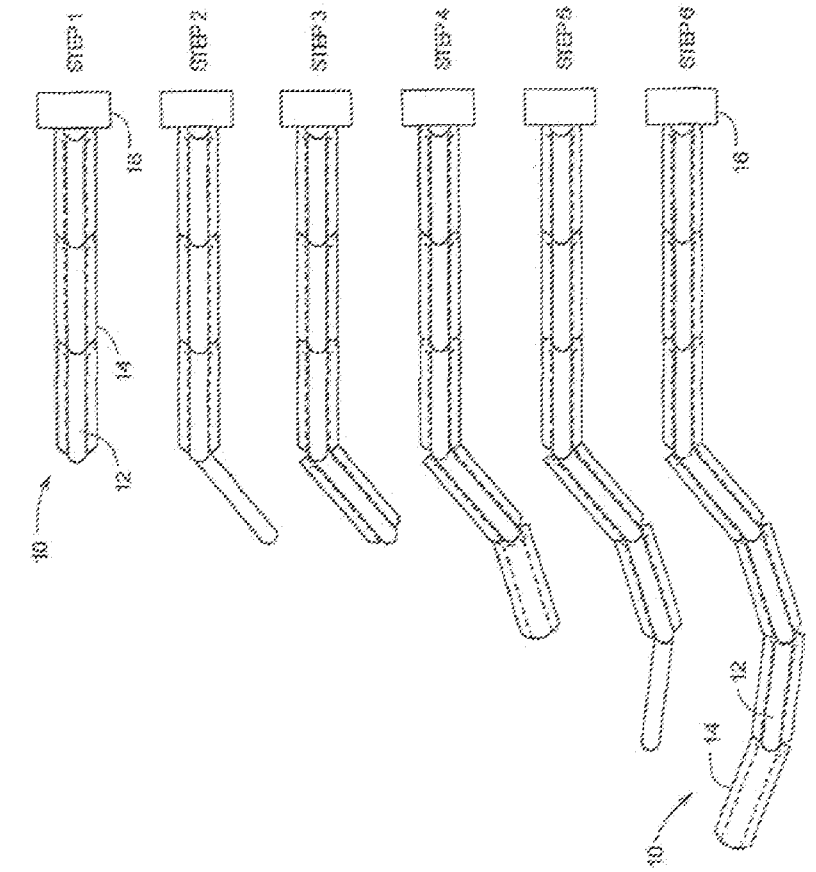

FIG. 11B

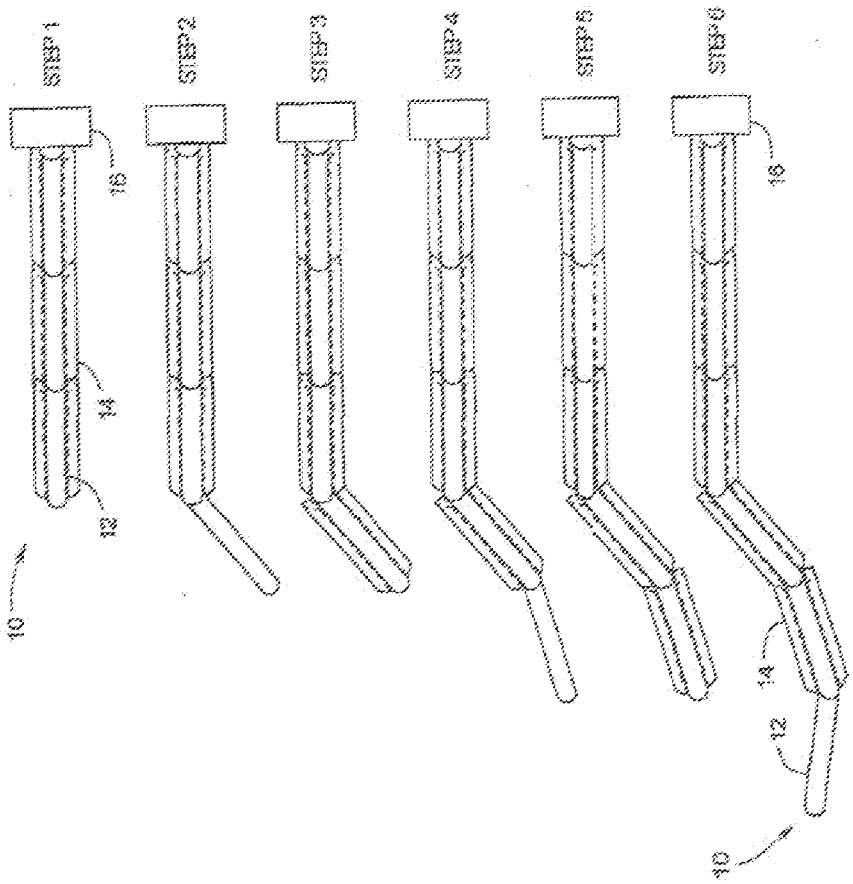

FIG. 11A

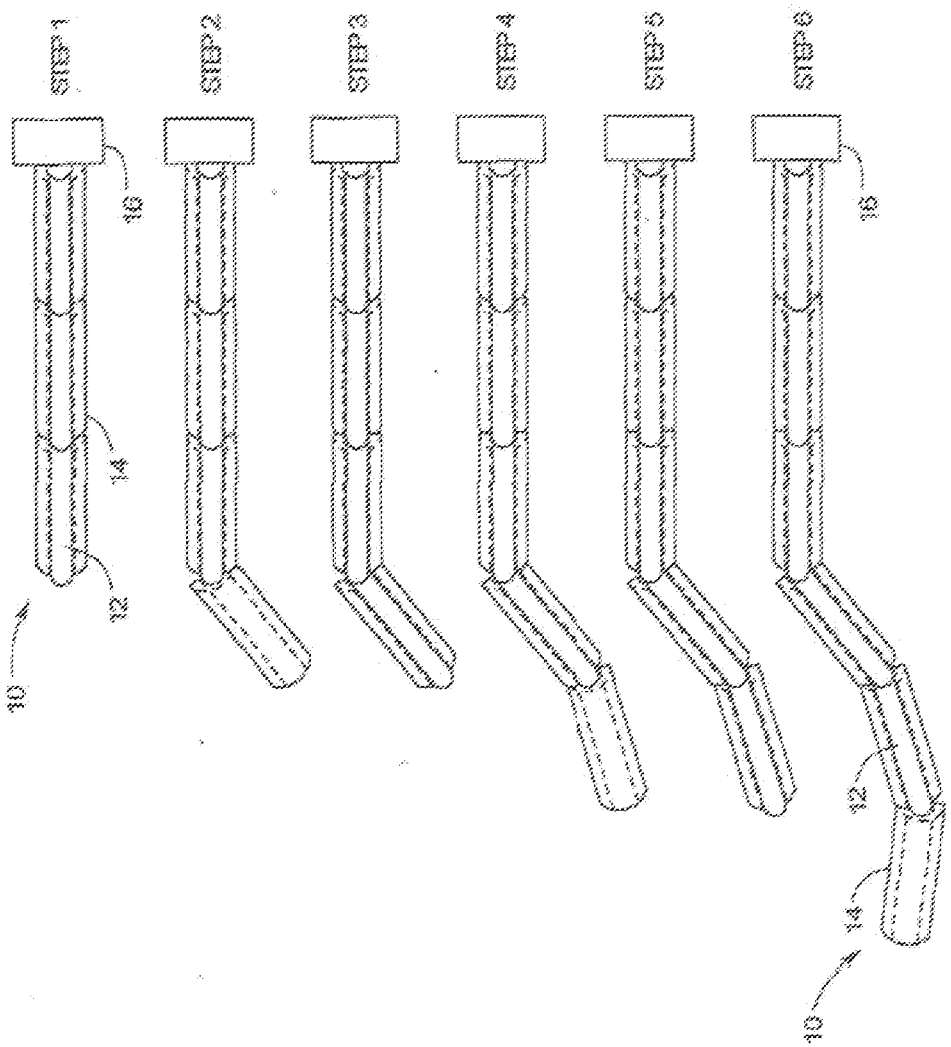

FIG. 11C

INTERNATIONAL SEARCH REPORT

International application No.
PCT/US2012/070924

A. CLASSIFICATION OF SUBJECT MATTER

A61B 19/00(2006.01)i, B25J 9/06(2006.01)1, B25J 19/06(2006.01)1, B25J 13/00(2006.01)1

According to International Patent Classification (IPC) or to both national classification and IPC

B. FIELDS SEARCHED

Minimum documentation searched (classification system followed by classification symbols)

A61B 19/00; A61B 1/00; A61B 18/14; A61B 17/04

Documentation searched other than minimum documentation to the extent that such documents are included in the fields searched

Korean utility models and applications for utility models

Japanese utility models and applications for utility models

Electronic data base consulted during the international search (name of data base and, where practicable, search terms used)

eKOMPASS(KIPO internal) & keywords: articulating, probe, degree, flexible, rigid

C. DOCUMENTS CONSIDERED TO BE RELEVANT

Category*	Citation of document, with indication, where appropriate, of the relevant passages	Relevant to claim No.
A	US 2009-0171151 A1 (CHOSET, H. M. et al.) 2 July 2009 See abstract; paragraphs [0046]-[0047], [0052], [0055]-[0056]; claims 10-11, 18.	1-52,54-56,60-75 ,77-103,106 ,108-114,128-145 ,147-148,235
A	US 2005-0215992 A1 (JENKINS, T. R. et al.) 29 September 2005 See abstract; figs. 1-2; paragraphs [0048]-[0050]; claims 1-2.	1-52,54-56,60-75 ,77-103,106 ,108-114,128-145 ,147-148,235
A	US 6743239 B1 (KUEHN, S. T. et al.) 1 June 2004 See abstract; column 7, lines 50-56; column 11, lines 28-40; claims 1, 5-7, 11-12,20; and figs. 1-3.	1-52,54-56,60-75 ,77-103,106 ,108-114,128-145 ,147-148,235
A	US 5759151 A (STURGES, R. H.) 2 June 1998 See abstract; column 3, lines 26-31; column 3, line 57-column 4, line 1; claim 1; figs. 1, 3.	1-52,54-56,60-75 ,77-103,106 ,108-114,128-145 ,147-148,235

☒ Further documents are listed in the continuation of Box C. ☒ See patent family annex.

* Special categories of cited documents:

"A" document defining the general state of the art which is not considered to be of particular relevance

"E" earlier application or patent but published on or after the international filing date

"L" document which may throw doubts on priority claim(s) or which is cited to establish the publication date of citation or other special reason (as specified)

"O" document referring to an oral disclosure, use, exhibition or other means

"P" document published prior to the international filing date but later than the priority date claimed

"T" later document published after the international filing date or priority date and not in conflict with the application but cited to understand the principle or theory underlying the invention

"X" document of particular relevance; the claimed invention cannot be considered novel or cannot be considered to involve an inventive step when the document is taken alone

"Y" document of particular relevance; the claimed invention cannot be considered to involve an inventive step when the document is combined with one or more other such documents, such combination being obvious to a person skilled in the art

"&" document member of the same patent family

Date of the actual completion of the international search	Date of mailing of the international search report
24 April 2013 (24.04.2013)	**25 April 2013 (25.04.2013)**
Name and mailing address of the ISA/KR Korean Intellectual Property Office 189 Cheongsa-ro, Seo-gu, Daejeon Metropolitan City' 302-70 1' Republic of Korea Facsimile No. 82-42-472-7140	Authorized officer HAN, In Ho Telephone No. 82-42-481-3362

Form PCT/ISA/210 (second sheet) (My 2009)

INTERNATIONAL SEARCH REPORT

International application No.
PCT/US2012/070924

C (Continuation). DOCUMENTS CONSIDERED TO BE RELEVANT

Category*	Citation of document, with indication, where appropriate, of the relevant passages	Relevant to claim No.
A	US 5251611 A (ZEHEL, W. E. et al.) 12 October 1993 See abstract; column 4, lines 34-39; column 4, line 62-column 5, line 6; column 5, lines 16-20; claims 1-3, 7-8; and figs. 1-4.	1-52,54-56,60-75,77-103,106,108-114,128-145,147-148,235

INTERNATIONAL SEARCH REPORT

International application No.
PCT/US2012/070924

Box No. II Observations where certain claims were found unsearchable (Continuation of item 2 of first sheet)

This international search report has not been estabhshed in respect of certain claims under Article 17(2)(a) for the following reasons:

1. ☐ Claims Nos.:
because they relate to subject matter not required to be searched by this Authority, namely:

2. ☒ Claims Nos.: **118-127,294-295**
because they relate to parts of the international application that do not comply with the prescribed requirements to such an extent that no meaningful international search can be carried out, specifically:

See the supplymental sheet.

3. ☒ Claims Nos.: **53,57-59,76, 104-105,107,1 15-1 17,146,149-234, 236-293**
because they are dependent claims and are not drafted in accordance with the second and third sentences of Rule 6.4(a).

Box No. Ill Observations where unity of invention is lacking (Continuation of item 3 of first sheet)

This International Searching Authority found multiple inventions in this international application, as follows:

1. ☐ As all required addtional search fees were timely paid by the applicant, this international search report covers all searchable claims.

2. ☐ As all searchable claims could be searched without effort justifying an additional fee, this Authority did not invite payment of any additional fee.

3. ☐ As only some of the required additional search fees were timely paid by the applicant, this international search report covers only those claims for which fees were paid, specifically claims Nos.:

4. ☐ No required additional search fees were timely paid by the applicant. Consequently, this international search report is restricted to the invention first mentioned in the claims; it is covered by claims Nos.:

Remark on Protest

☐ The additional search fees were accompanied by the applicant's protest and, where applicable, the payment of a protest fee.

☐ The additional search fees were accompanied by the applicant's protest but the applicable protest fee was not paid within the time limit specified in the invitation.

☐ No protest accompanied the payment of additional search fees.

Box II.

Claims 118-127 are unclear since they refer to claims which are not searchable due to not being drafted in accordance with the second and third sentence of Rule 6.4(a).

As claims 294 and 295 contain references to the description and/or the drawings, claims 294 and 295 are unclear. According to PCT Rule 6.2(a), claims should not contain such references except where absolutely necessary, which is not the case here.

INTERNATIONAL SEARCH REPORT

Information on patent family members

International application No.

PCT/US2012/070924

Patent document cited in search report	Publication date	Patent family member(s)	Publication date
US 2009-0171 15 1 A 1	02.07.2009	EP 1778054 A2	02. 05,2007
		EP 1778054 A4	19. 11,2008
		EP 2446803 A1	02. 05,2012
		JP 2008-504072 A	14. 02,2008
		Wo 2006-083306 A2	10. 08,2006
		Wo 2006-083306 A3	03. 04,2008
US 2005-0215992 A 1	29.09.2005	AU 2065102 A	2 1.05,2002
		CA 2428314 A1	16. 05,2002
		EP 1331893 A2	06. 08,2003
		EP 1331893 B1	08. 12,2004
		EP 1510180 A2	02. 03,2005
		EP 1510180 A3	23. 03,2005
		EP 1510180 B1	11.04,2007
		JP 2004-512894 A	30. 04,2004
		US 6916306 B1	12. 07,2005
		US 7182764 B2	27. 02,2007
		wo 02-38052 A2	16. 05,2002
		wo 02-38052 A3	3 1. 10,2002
US 6743239 B1	0 1.06.2004	EP 1284657 A2	26. 02,2003
		EP 1284657 B1	14. 09,201 1
		wo 01-89440 A2	29. 11,200 1
		wo 01-89440 A3	04. 04,2002
US 5759151 A	02.06. 1998	None	
US 525161 1 A	12. 10. 1993	JP 03-238152 B2	05. 10,200 1
		wo 92-19147 A1	12. 11. 1992