PCT WORLD INTELLECTUAL PROPERTY ORGANIZATION
International Bureau

INTERNATIONAL APPLICATION PUBLISHED UNDER THE PATENT COOPERATION TREATY (PCT)

(51) International Patent Classification 6 :
H01R 21/22, 23/70, H04Q 1/14

A1

(11) International Publication Number: **WO 95/01665**

(43) International Publication Date: 12 January 1995 (12.01.95)

(21) International Application Number: PCT/US94/02912

(22) International Filing Date: 17 March 1994 (17.03.94)

(30) Priority Data:
08/085,343 30 June 1993 (30.06.93) US

(71) Applicant: ADC TELECOMMUNICATIONS, INC. [US/US]; 4900 West 78th Street, Minneapolis, MN 55435 (US).

(72) Inventors: MORGENSTERN, Todd, Allen; 10742 Cavall Road, Bloomington, MN 55438 (US). DEWEY, James, D.; 5025 Norwood Lane, Plymouth, MN 55442 (US).

(74) Agent: BRUESS, Steven, C.; Merchant, Gould, Smith, Edell, Welter & Schmidt, 3100 Norwest Center, 90 South Seventh Street, Minneapolis, MN 55402 (US).

(81) Designated States: AT, AU, BB, BG, BR, BY, CA, CH, CN, CZ, DE, DK, ES, FI, GB, GE, HU, JP, KG, KP, KR, KZ, LK, LU, LV, MD, MG, MN, MW, NL, NO, NZ, PL, PT, RO, RU, SD, SE, SI, SK, TJ, TT, UA, UZ, VN, European patent (AT, BE, CH, DE, DK, ES, FR, GB, GR, IE, IT, LU, MC, NL, PT, SE), OAPI patent (BF, BJ, CF, CG, CI, CM, GA, GN, ML, MR, NE, SN, TD, TG).

Published
With international search report.

(54) Title: REAR CROSS CONNECT DSX SYSTEM

(57) Abstract

A jack assembly is disclosed including a jack having a means for releasable attachment to a mount. The jack further includes a body with means for connection to jack plugs and a circuit board having a plurality of contact points disposed on the first and second sides of the circuit board. Also included is a mount having a plurality of exposed contact members arranged in a predetermined array so that when the jack is inserted into the mount each electric contact point is in electrical communication with a discrete member of the contact members on the mount.

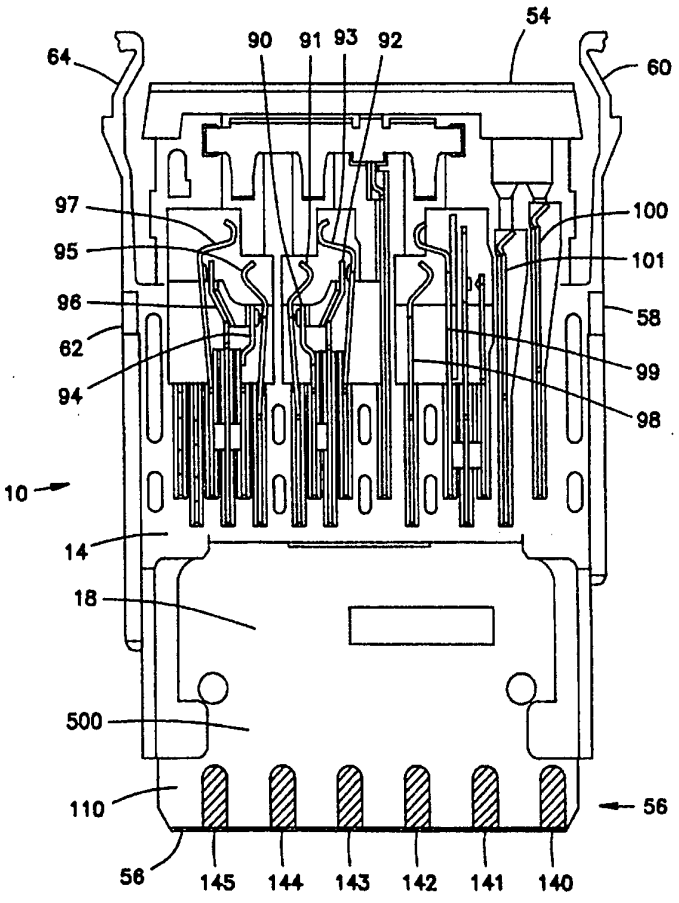

FOR THE PURPOSES OF INFORMATION ONLY

Codes used to identify States party to the PCT on the front pages of pamphlets publishing international applications under the PCT.

AT	Austria	**GB**	United Kingdom	**MR**	Mauritania
AU	Australia	**GE**	Georgia	**MW**	Malawi
BB	Barbados	**GN**	Guinea	**NE**	Niger
BE	Belgium	**GR**	Greece	**NL**	Netherlands
BF	Burkina Faso	**HU**	Hungary	**NO**	Norway
BG	Bulgaria	**IE**	Ireland	**NZ**	New Zealand
BJ	Benin	**IT**	Italy	**PL**	Poland
BR	Brazil	**JP**	Japan	**PT**	Portugal
BY	Belarus	**KE**	Kenya	**RO**	Romania
CA	Canada	**KG**	Kyrgystan	**RU**	Russian Federation
CF	Central African Republic	**KP**	Democratic People's Republic of Korea	**SD**	Sudan
CG	Congo			**SE**	Sweden
CH	Switzerland	**KR**	Republic of Korea	**SI**	Slovenia
CI	Côte d'Ivoire	**KZ**	Kazakhstan	**SK**	Slovakia
CM	Cameroon	**LI**	Liechtenstein	**SN**	Senegal
CN	China	**LK**	Sri Lanka	**TD**	Chad
CS	Czechoslovakia	**LU**	Luxembourg	**TG**	Togo
CZ	Czech Republic	**LV**	Latvia	**TJ**	Tajikistan
DE	Germany	**MC**	Monaco	**TT**	Trinidad and Tobago
DK	Denmark	**MD**	Republic of Moldova	**UA**	Ukraine
ES	Spain	**MG**	Madagascar	**US**	United States of America
FI	Finland	**ML**	Mali	**UZ**	Uzbekistan
FR	France	**MN**	Mongolia	**VN**	Viet Nam
GA	Gabon				

REAR CROSS CONNECT DSX SYSTEM

BACKGROUND OF THE INVENTION

A digital cross-connect system (DSX) provides a location for interconnecting two digital transmission paths. The apparatus for a DSX is located in one or more frames, or bays, usually in a telephone central office. The DSX apparatus also provides jack access to the transmission paths

DSX jacks are well-known and include a plurality of spring contacts for receiving tip and ring plugs. The jacks are commonly ganged in a common housing which is mounted on the frame. The jacks are typically hard wired to wire termination pins which are mounted on a side of the housing opposite plug access openings.

The DSX of the prior art provided for improved operator access, and capabilities to provide for significant electronics. More specifically, commonly assigned U.S. Patent No. 4,840,568 provided that the hard wired DSX signals are connected to a mount, within which the jack is inserted. The jack has a plurality of electrical contacts which can access these signals. However, the cross connect signals are hard wired to the opposite side of the jack itself. Having the cross connect signals hard wired to the jack makes removal of the jack contingent upon disconnecting the hard wired cross connect signals from the jack. The present invention provides for a jack and mount arrangement in which this problem is solved.

SUMMARY OF THE INVENTION

According to a preferred embodiment of the present invention an apparatus is disclosed for providing access to a plurality of telecommunication lines. The apparatus includes a mount which includes a plurality of electric contacts hard wired to a source of DSX signals, and cross connect signals. A plurality of jacks are provided to be releasably attached to the mount points. Each jack includes a plurality of electric contact points designed to engage the electric contacts of the mount to receive the DSX signals and cross connector signals when the jack is inserted in the mount.

BRIEF DESCRIPTION OF THE DRAWINGS

Figure 1A is a cut-away side elevation view of a jack.

Figure 1B is an opposite side view of the jack of Fig. 1A.

Figure 2 is a perspective view of a jack.

Figure 3 is a front elevation view of a mount.

Figure 4 is a perspective view of a mount.

DETAILED DESCRIPTION OF THE PREFERRED EMBODIMENT

Referring now to the several figures in which identical elements are numbered identically throughout, a description of the preferred embodiment of the present invention will now be provided.

With initial reference to Figure 1A, there is generally shown a jack 10. The jack 10 includes a dielectric body 14 and a printed circuit board 18. The jack 10 extends from a leading edge 54 of body 14 to a trailing edge 56 of circuit board 18. An upper edge 58 of body 14 is provided with an axially extending rail 60. A lower edge 62 of body 14 is provided with a lower rail 64 , similar in structure to that of rail 60.

The upper and lower rails, 60 and 64, are designed to releasably secure the jack 10 within a mount 20 in

the same fashion as that disclosed in commonly assigned U.S. patent 4,840,568. The mount 20 will be described in detail later.

As seen in Figure 2, leading edge 54 of jack 10 is provided with a plurality of holes or ports extending therethrough. The plurality of ports include a monitor (or MON) port 82, an OUT port 84, and an IN port 86. These ports provide access for jack plugs (not shown) to be inserted into the jack 10. When inserted the jack plugs (not shown) access electric circuitry, through a plurality of spring contacts shown in Fig. 1A.

The spring contacts are located within the body 14 of the jack 10. As best seen in Figure 1A, the plurality of spring contacts includes an OUT tip normal spring 90 and an OUT tip spring 91. The plurality also includes an OUT ring normal spring 92 and an OUT ring spring 93, an IN tip normal spring 94 and an IN tip spring 95. The plurality also includes an IN ring normal spring 96 and an IN spring 97, a monitor tip spring 98, and a monitor spring 99, a first LED spring 100 and a second LED spring 101. Springs 91 and 93 are disposed to be engaged by the tip and ring, respectively, of an electrical jack plug, not shown, inserted within the OUT port 84. Springs 95, 97 are selected to be engaged by the tip and ring of a plug, not shown, inserted within the IN port 86. Similarly springs 98, 99 are disposed to be engaged by the tip and ring of a plug, not shown, inserted within the MON port 82. Spring pairs 90-91, 92-93, 94-95, and 96-97 are in normal contact in the absence of a plug within either ports 84 and 86, and will be opened by insertion of a plug, not shown. Springs 98, 99 are connected across a resistance to springs 91 and 93. The arrangement of these contacts in the body of the jack 10 is similar as that described in commonly assigned U.S. patent No. 4,840,568.

As seen in Figures 1A and 1B, the circuit board 18

of jack 10 includes a first side 110 and a second side 111. The size of the circuit board is defined by the upper and lower rails 60, 64 of the jack 10 for board 18 to stay within an area bounded by the rails 60, 64. The circuit board 18 is of standard construction. The trailing edge 56 of the circuit board 18 has a plurality of electric contact points 140-145 and 150-155 disposed on the first and second sides of the circuit board 18 proximate to the trailing edge 56. The electrical contact points 140-145 are evenly spaced on the first side 110 of the circuit board 18. The electrical contact points 150-155 are evenly spaced in an alternate arrangement (i.e., staggered with respect to contact points 140-145) on the second side 111 of circuit board 18, as best illustrated by the position of contacts 220-231 shown in Figure 3. This alternate spacing provides that no electric contact point on the first side 110 of circuit board 18 is immediately adjacent to an electric contact point on the second side 111 of the circuit board 18. Each electric contact point receives a independent signal when connected within the mount. Because an additional amount of electric contact points can be disposed on the circuit board, the signals received include the IN cross connect signal and the OUT cross connect signal.

The electric contact points 140-145,150-155 alternately disposed on the first and second sides, 110,111 of the circuit board are electrically connected to a plurality of circuit paths (not shown) connecting each contact point with individual ones of the spring contacts. The electric contact points 140-145,150-155 are designed to connect to electric contacts disposed in the mount 20 as will be described.

Referring to Figures 3 and 4, the mount 20 of the present invention is of the same general configuration as that described in commonly assigned U.S. Patent No. 4,840,568. In addition to containing means to

releasably secure the jack 10 within the mount 20 the mount 20 of the invention includes a plurality of slots 160-163 arranged in parallel, spaced apart columnar format aligned generally to receive the circuit boards 18 of jacks 10 as they are inserted into the mount 20. A plurality of bores 200-211 are located in the slots. These bores 200-211 are arranged in such a fashion as to form two parallel lines, and each bore is spaced in an alternate position from the bore opposite it as best seen in Figure 3. As seen in Figure 4, within each bore is disposed an electric contact 220-231. As seen in Figure 4, each electric contact has an associated wire wrap termination pin 240 and a spring contact 241. The wire wrap termination pin 240 extends away from the slots 160-163 and jack 10, while the spring contact 241 is ordinarily disposed in the slot. Each spring contact 241 of each electric contact 220-231 extends beyond half the distance across any slot. The arrangement of the bores 200-211 provides for an arrangement of electric contacts 220-231 where no individual spring contact is in electrical communication with any other spring contact in the mount. A plurality of mounts can be placed in an equipment rack.

Spring contacts 241 are deformable, ie pushed back upon insertion of jack 10 into mount 20. In the preferred embodiment, spring contacts 241 can extend beyond the halfway point of any of slots 160-165. By staggering the spring contact they can extend beyond the halfway across the slot allowing the spring contact to develop sufficient contact force on circuit board 18 of jack 10. If contact points 140-145 and 150-155 were not staggered, the spring contacts would touch. By staggering the contact points, the spring contacts will not form closed circuits. In certain applications, the spring contacts may not necessarily extend beyond the halfway point across a slot.

Attached to the wire wrap termination pins of each

electric contact associated with any given slot are seven wires (not shown) carrying common DSX signals. These DSX signals include: a tip in; a tip out; a ring in; a ring out; a sleeve ground, a LED ground, and an energized source. These are well known in the art, and described in commonly assigned U.S. Patent No. 4,840,568. The IN and OUT cross connect signals are also received from the electric contacts in the mount. The remaining contacts in the mount correspond to signals which can be used for other well known signal enhancement functions.

The circuitry connected to the contact points on the circuit board include resistors and other circuit elements to provide well known DSX functions. The DSX circuitry of the present invention is similar to that shown in commonly assigned U.S. Patent No. 4,840,568. The cross connect circuitry of the present invention is accessible from the electric contact points disposed on the circuit board. When the jack is inserted into the mount the electric contact points located on the circuit board come in contact with the electric contacts disposed in the associated slot on the mount.

Benefits of maintaining all of the wire wrap terminations pins on the mount, behind the jack, are that the jack may be removed from the mount without disconnecting the hard wired cross connect signals from the jack, as would be necessary in the jack of commonly assigned U.S. Patent 4,840,568. Also by maintaining all of the wires on the mount keep the entire system more orderly.

Further benefits of staggering or alternating the contacts is a greater density of wires in an equipment rack. By providing this benefit, more applications become available. Additionally staggering the contact points allows the spring contacts to extend over half way across any of the slots of the mount so that when the jack is inserted into the mount sufficient contact

force may be generated.

While the foregoing detailed description of the present invention describes the invention in a preferred embodiment, it will be appreciated that it is the intent of the invention to include all modifications and equivalent designs. Accordingly, the scope of the present invention is intended to be limited only by the claims which are appended hereto.

WE CLAIM:

1. A jack assembly comprising:

a) a jack comprising:

i) a means for releasable attachment to a mount;

ii) a circuit board having a first side and a second side;

iii) a body having means for connection to jack plugs, said means for releasable attachment being disposed on said body, and said circuit board being disposed adjacent to said body; and

iv) a plurality of electric contact points disposed on said first and said second side of said circuit board in an alternate pattern.

b) said mount having a plurality of exposed contact members disposed in a predetermined array, so that when said jack is inserted into said mount, each of said contact points is in electrical communication with a discrete contact member of said contact members on said mount.

2. A jack assembly as in claim 1, wherein each of said exposed contact members of said mount are sprung, and in electrical communication with a wire termination member.

3. A jack assembly comprising:

a jack having means for releasable attachment to a mount, and a circuit board, said circuit board having a first side and a second side;

a plurality of electric contact points disposed on said first side and said second side of said circuit board such that each electric contact points disposed on said first side does not have one of said electric contact points disposed on said second side immediately adjacent said electric contact on said first side;

said mount having a plurality of exposed contact members, each of said contact members positioned to come in contact with a discrete member of said plurality of electrical contacts when said jack is inserted into said mount.

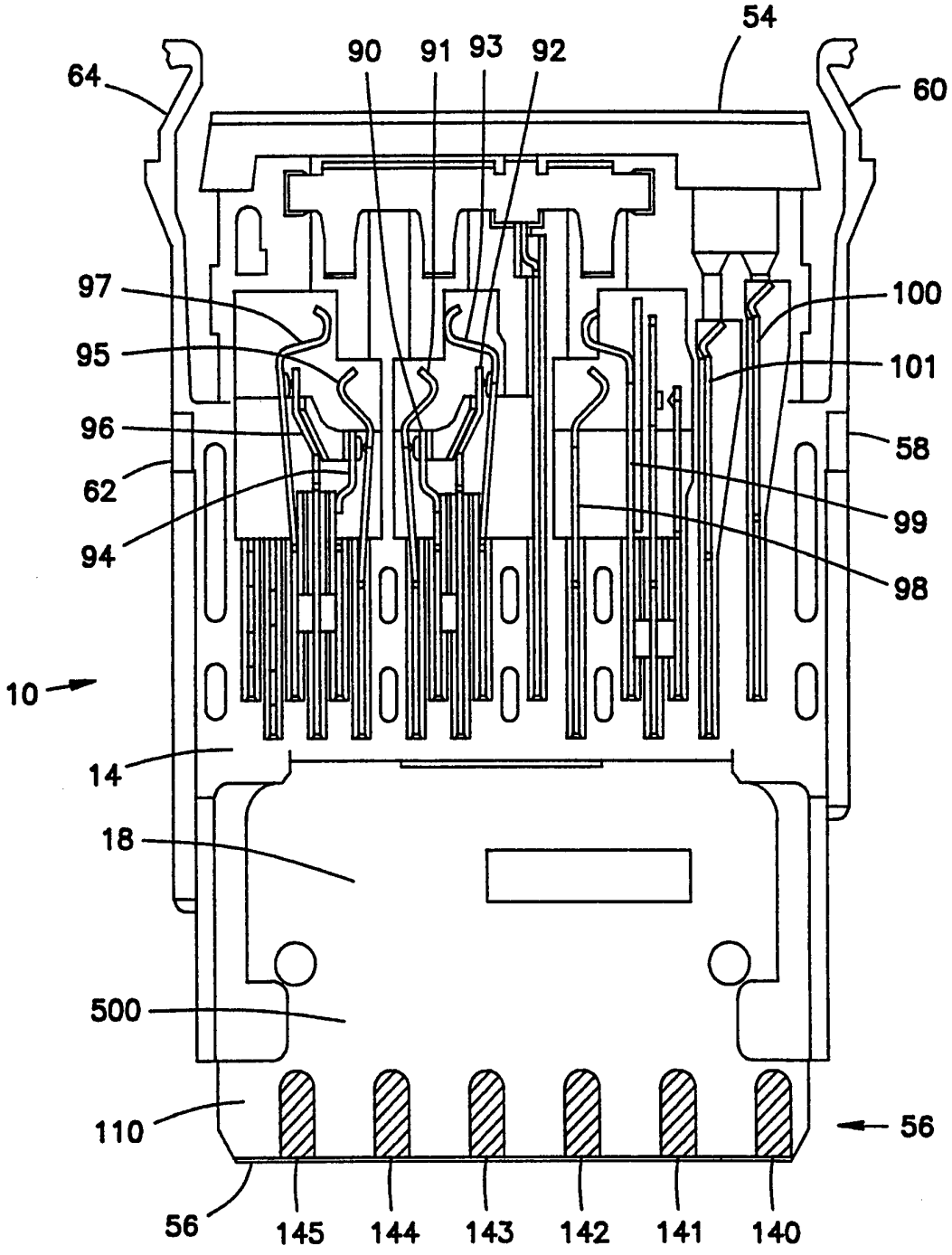
54
64
90
91
93
92
60
97
100
95
101
96
58
62
99
94
98
10
14
18
500
110
56
56
145
144
143
142
141
140

FIG. 1A

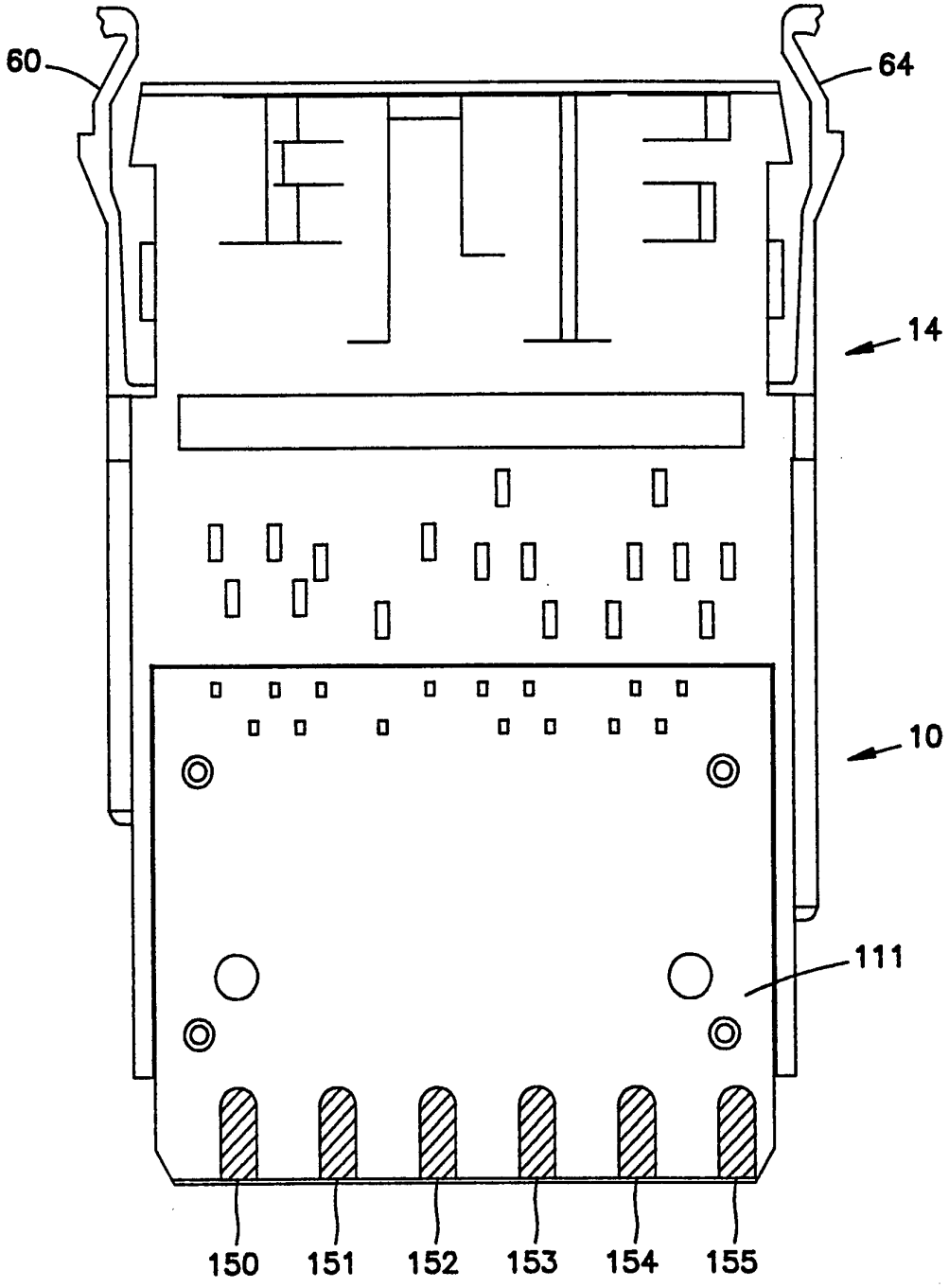

FIG. 1B

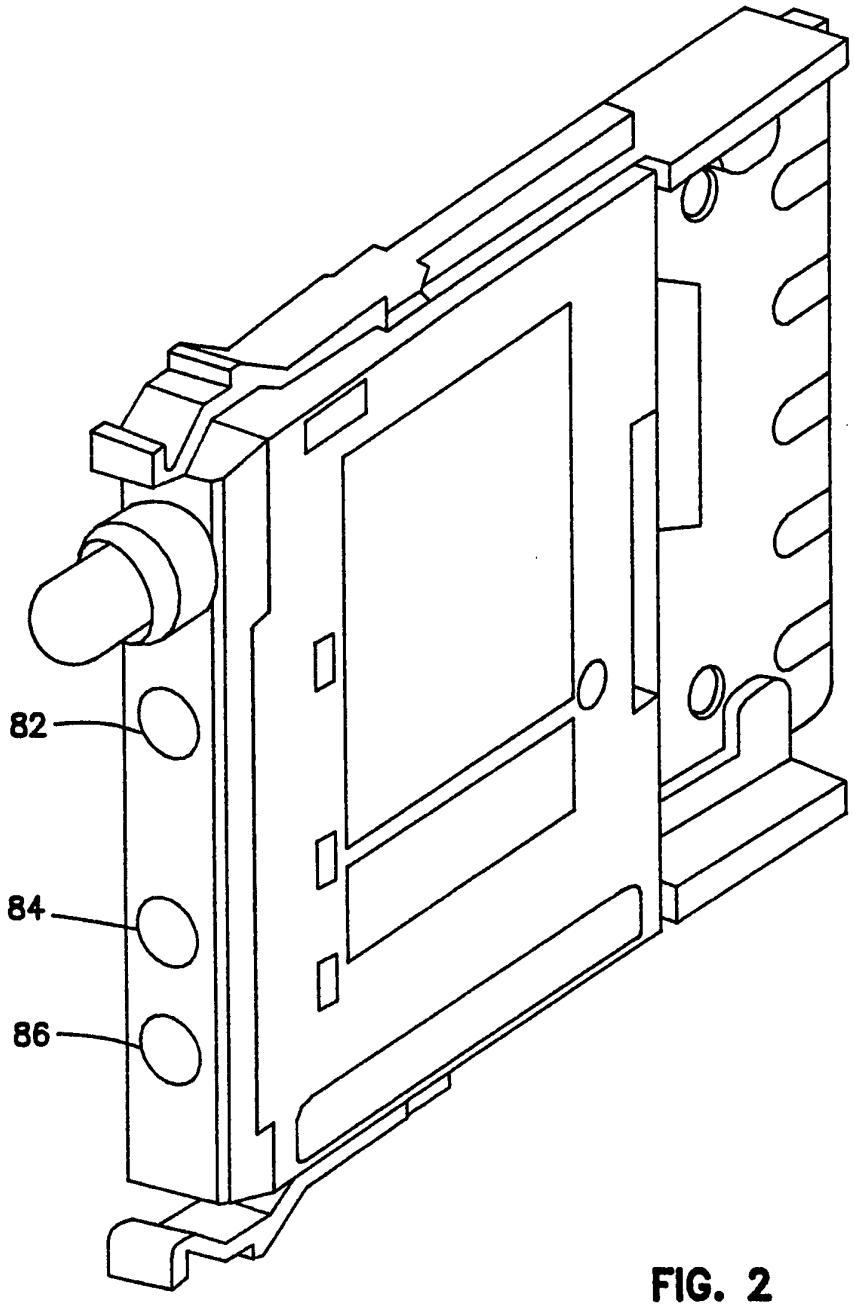

FIG. 2

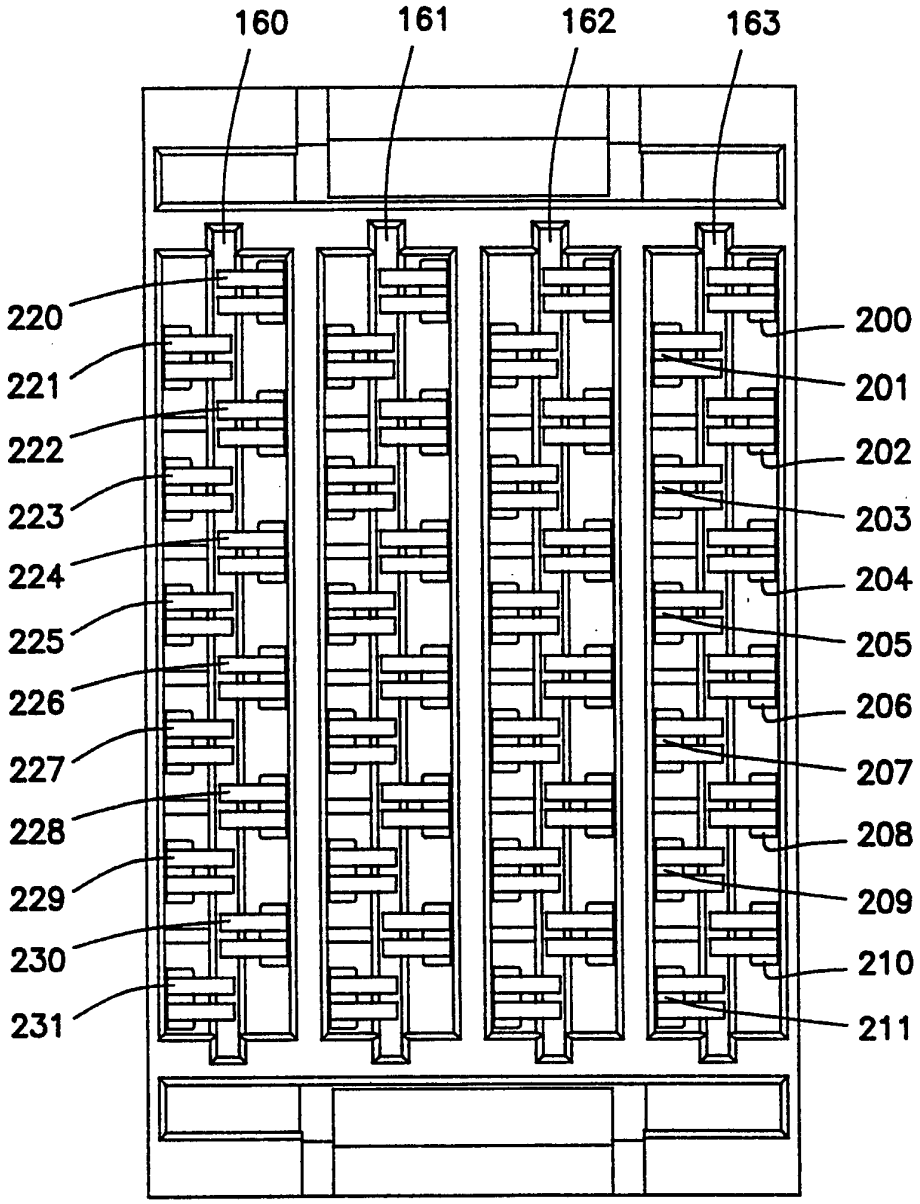
160
161
162
163
220
221
222
223
224
225
226
227
228
229
230
231
200
201
202
203
204
205
206
207
208
209
210
211

FIG. 3

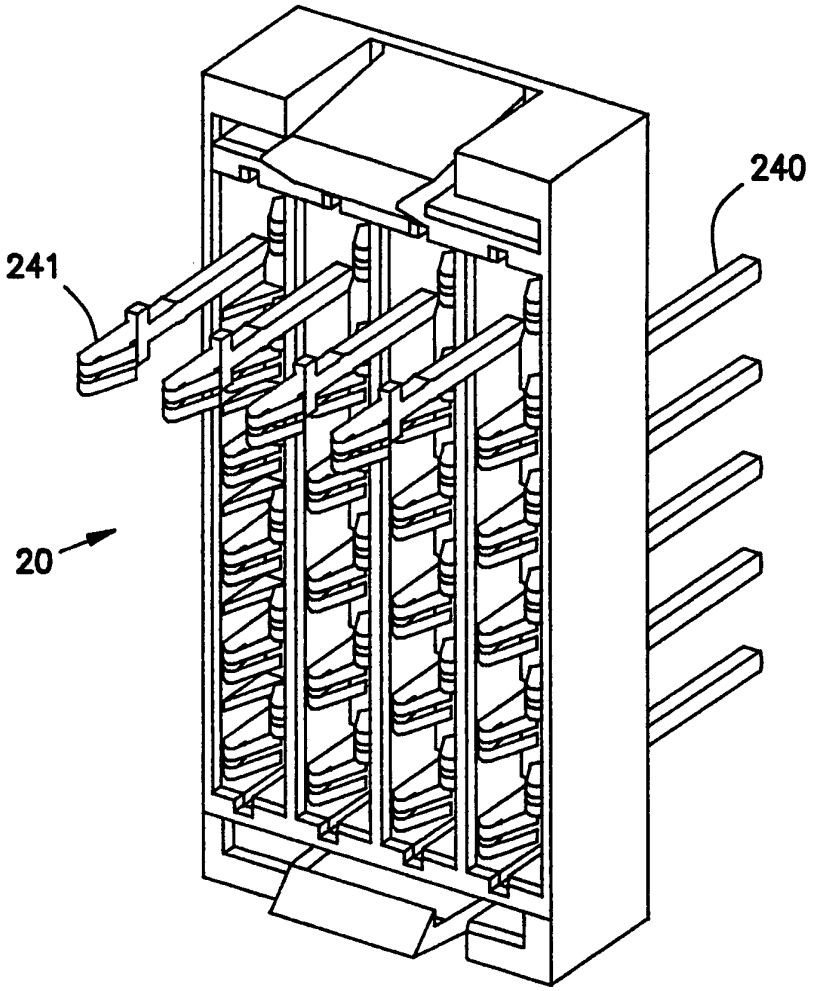

FIG. 4

INTERNATIONAL SEARCH REPORT

Intc. onal Application No
PCT/US 94/02912

A. CLASSIFICATION OF SUBJECT MATTER
IPC 6 H01R21/22 H01R23/70 H04Q1/14

According to International Patent Classification (IPC) or to both national classification and IPC

B. FIELDS SEARCHED

Minimum documentation searched (classification system followed by classification symbols)
IPC 6 H01R H04Q

Documentation searched other than minimum documentation to the extent that such documents are included in the fields searched

Electronic data base consulted during the international search (name of data base and, where practical, search terms used)

C. DOCUMENTS CONSIDERED TO BE RELEVANT

Category °	Citation of document, with indication, where appropriate, of the relevant passages	Relevant to claim No.
Y	US,A,4 840 568 (BURROUGHS ET AL.) 20 June 1989 cited in the application	1,3
A	see column 2, line 44 - column 11, line 59; figures 1-18	2
Y	US,A,3 740 699 (JOHNSON ET AL.) 19 June 1973 see column 2, line 22 - column 3, line 20; figures 1-3	1,3
Y	US,A,4 797 114 (LAU) 10 January 1989 see column 5, line 42 - column 31, line 41; figures 1-23	1,3

-/--

[X] Further documents are listed in the continuation of box C.

[X] Patent family members are listed in annex.

° Special categories of cited documents :

"A" document defining the general state of the art which is not considered to be of particular relevance

"E" earlier document but published on or after the international filing date

"L" document which may throw doubts on priority claim(s) or which is cited to establish the publication date of another citation or other special reason (as specified)

"O" document referring to an oral disclosure, use, exhibition or other means

"P" document published prior to the international filing date but later than the priority date claimed

"T" later document published after the international filing date or priority date and not in conflict with the application but cited to understand the principle or theory underlying the invention

"X" document of particular relevance; the claimed invention cannot be considered novel or cannot be considered to involve an inventive step when the document is taken alone

"Y" document of particular relevance; the claimed invention cannot be considered to involve an inventive step when the document is combined with one or more other such documents, such combination being obvious to a person skilled in the art.

"&" document member of the same patent family

Date of the actual completion of the international search	Date of mailing of the international search report
12 July 1994	20 JUIL. 1994

Name and mailing address of the ISA	Authorized officer
European Patent Office, P.B. 5818 Patentlaan 2 NL - 2280 HV Rijswijk Tel. (+ 31-70) 340-2040, Tx. 31 651 epo nl, Fax (+ 31-70) 340-3016	Tappeiner, R

Form PCT/ISA/210 (second sheet) (July 1992)

C.(Continuation) DOCUMENTS CONSIDERED TO BE RELEVANT

Category *	Citation of document, with indication, where appropriate, of the relevant passages	Relevant to claim No.
Y	GB,A,1 549 201 (RYFORD LIMITED) 1 August 1979 see page 1, line 24 - page 4, line 125; figures 1-5	1,3

INTERNATIONAL SEARCH REPORT

Information on patent family members

Inter ional Application No
PCT/US 94/02912

Patent document cited in search report	Publication date	Patent family member(s)	Publication date
US-A-4840568	20-06-89	JP-A- 63250993	18-10-88
US-A-3740699	19-06-73	NONE	
US-A-4797114	10-01-89	NONE	
GB-A-1549201	01-08-79	NONE	