US 20110252731A1

(19) United States

(12) Patent Application Publication

(10) Pub. No.: US 2011/0252731 A1

(43) Pub. Date: Oct. 20, 2011

Boyer et al.

(54) DRAINED AND BACK VENTILATED THIN COMPOSITE WALL CLADDING SYSTEM

(75) Inventors: **Keith D. Boyer**, Moon Township, PA (US); **Dario Giandomenico**, Mt. Lebanon, PA (US); **Ralph A. Bertram**, Avalon, PA (US)

(73) Assignee: **CENTRIA**, Moon Township, PA (US)

(21) Appl. No.: **13/089,625**

(22) Filed: **Apr. 19, 2011**

Related U.S. Application Data

(60) Provisional application No. 61/326,061, filed on Apr. 20, 2010.

Publication Classification

(51) **Int. Cl.**
E04B 1/70 (2006.01)
E04B 1/38 (2006.01)

(52) **U.S. Cl.** **52/302.1**; 52/698

(57) **ABSTRACT**

A wall panel includes a panel body, a first jamb clip, a second jamb clip, a bottom member, and an attachment clip. The first jamb clip is positioned adjacent to a right side of the panel body and the second jamb clip is positioned adjacent to a left side of the panel body. The first and second jamb clips are each configured to receive a portion of a spline. The bottom member has an engagement portion and is positioned adjacent to a bottom end of the panel body. The attachment clip is positioned adjacent to an upper end of the panel body and has an engagement receiving portion configured to engage an engagement portion of an adjacent panel. The bottom end of the panel body is configured to define a ventilation gap when joined to an adjacent panel.

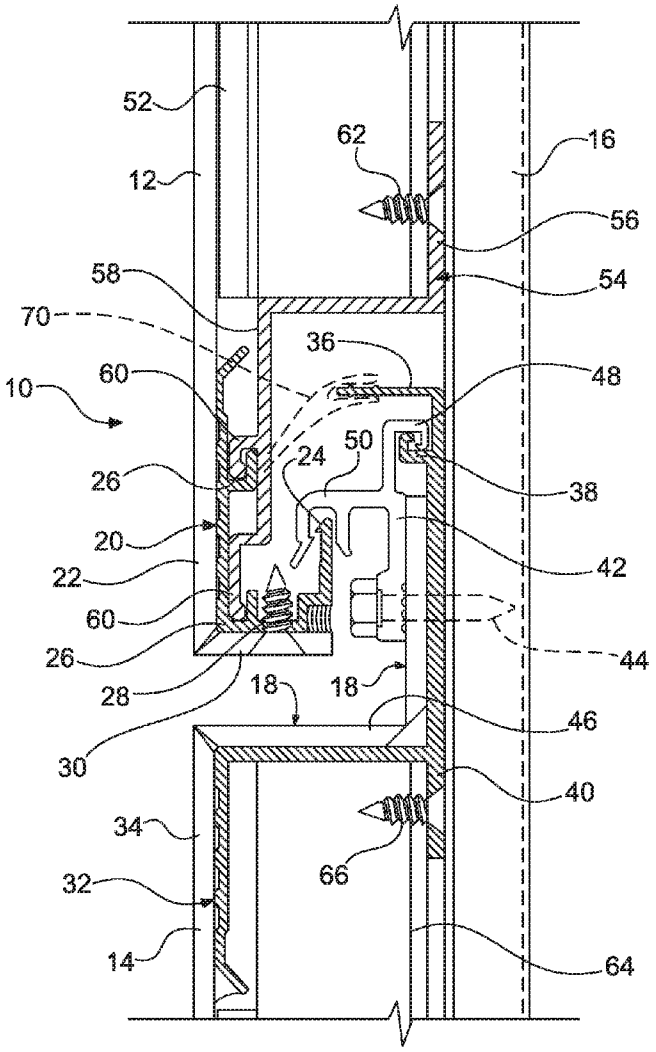

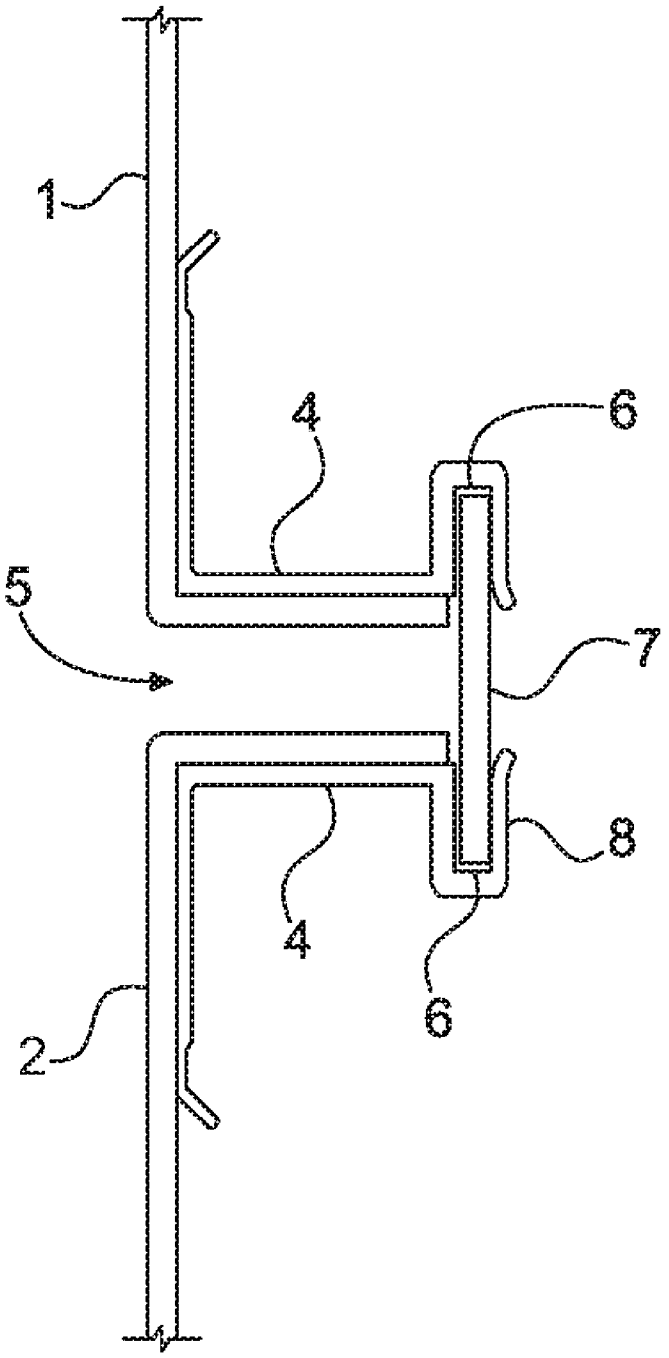

Fig. 1
(PRIOR ART)

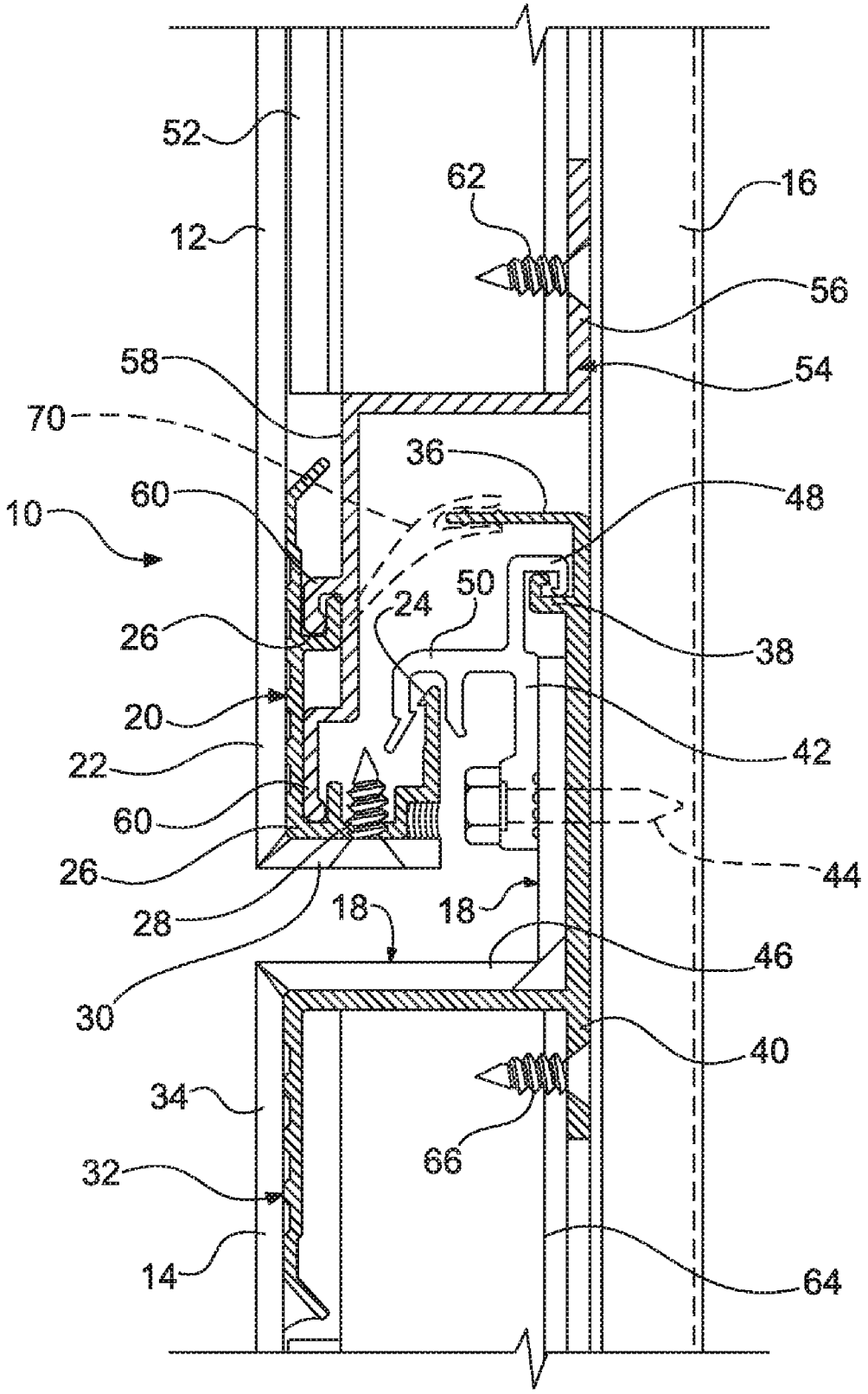
52
62
16
12
56
58
54
70
36
60
48
10
50
24
26
38
20
42
22
60
44
26
28
18
18
46
30
40
34
66
32
14
64

Fig. 2

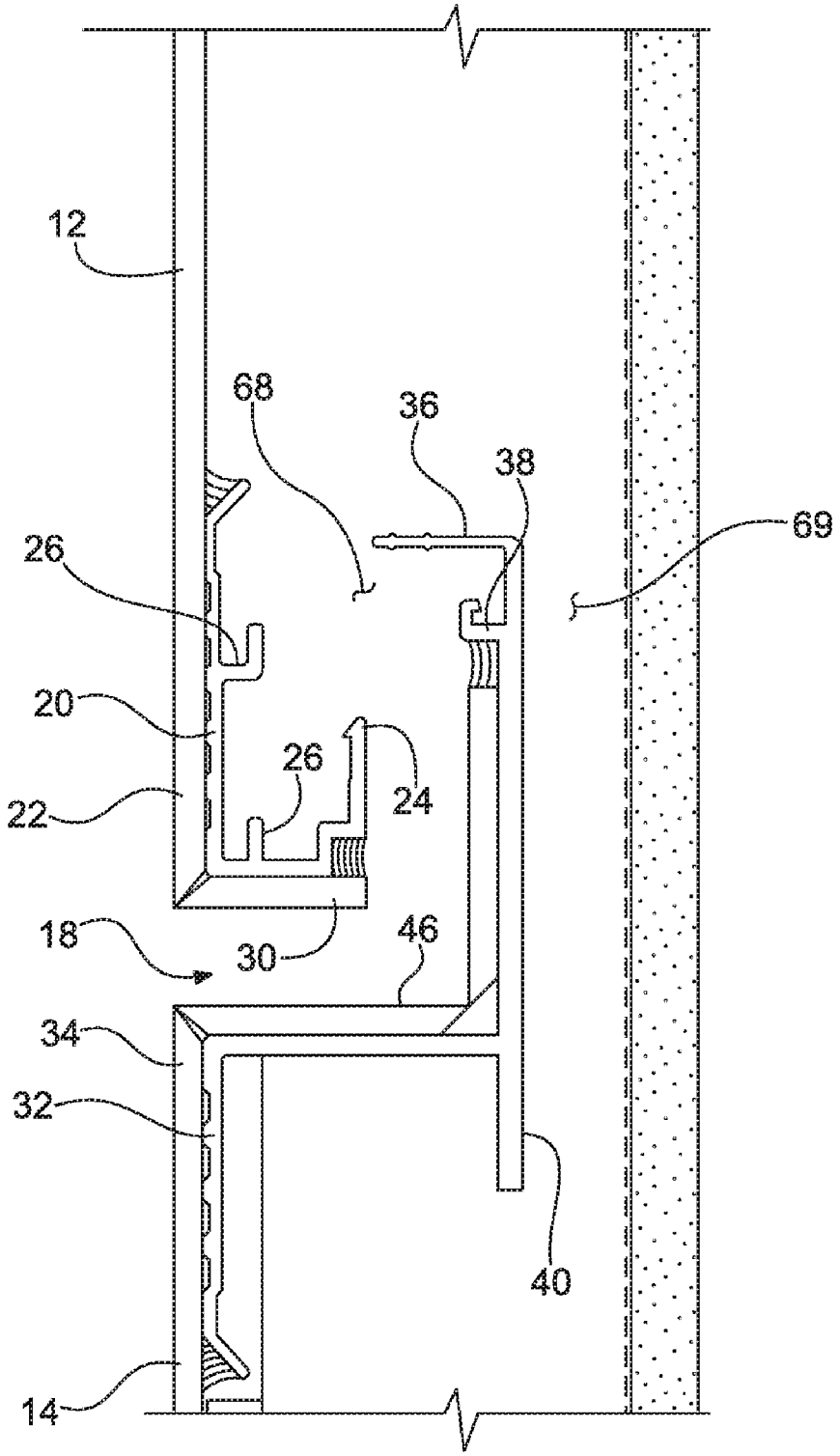

Fig. 3

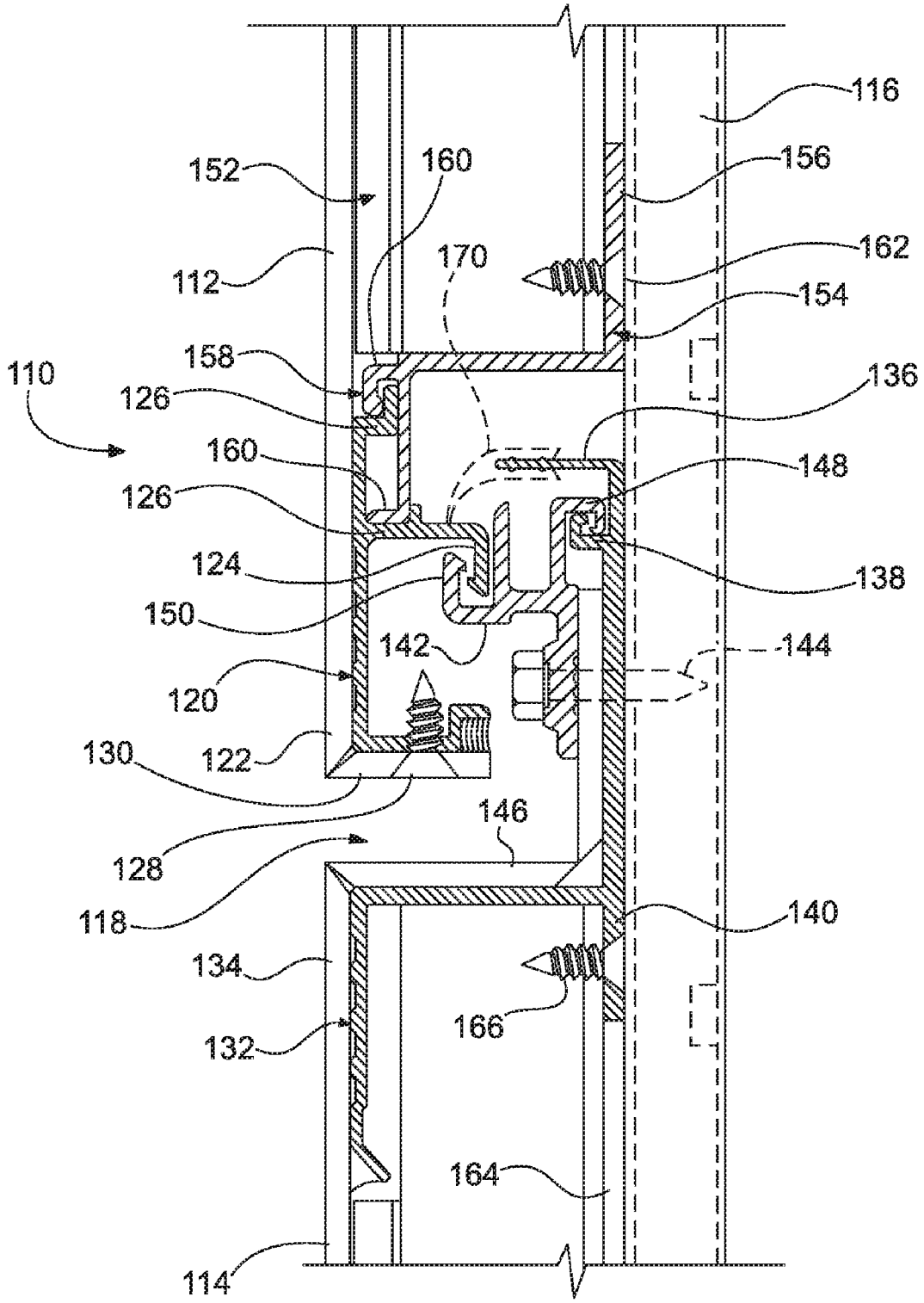
116
152
160
156
112
170
162
154
110
158
126
136
160
148
126
124
138
150
142
144
120
130
122
146
128
118
140
134
166
132
164
114

Fig. 4

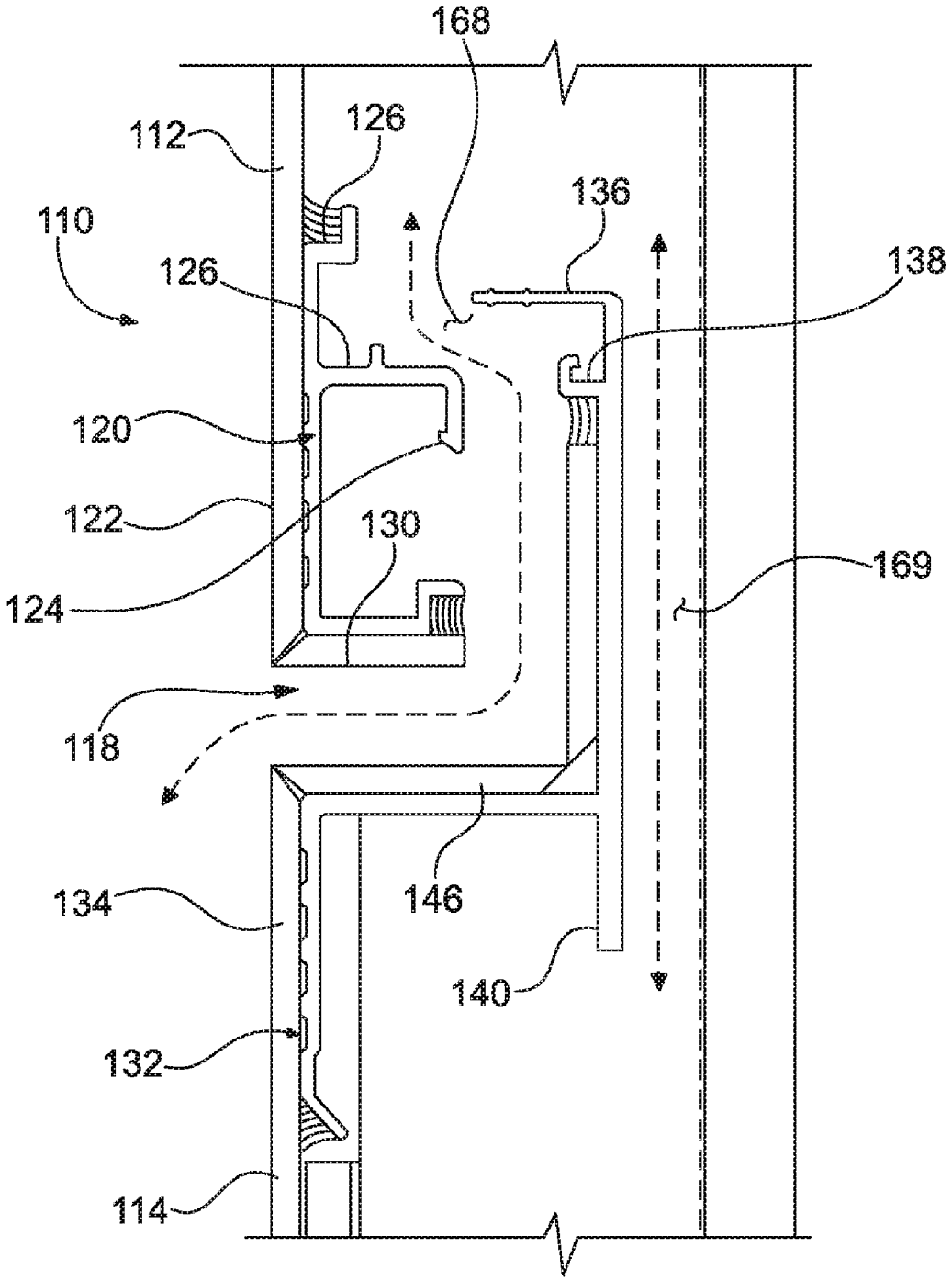
168
112
126
136
110
126
138
120
122
130
169
124
118
146
134
140
132
114

Fig. 5

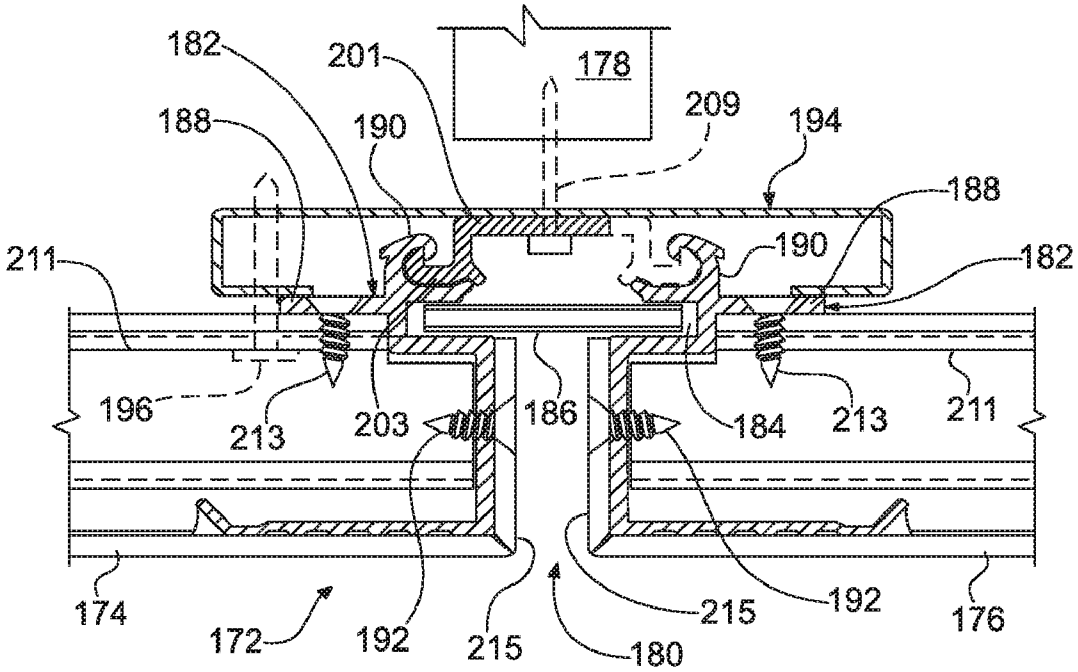
178
182
201
188
190
209
194
188
190
182
211
196
213
203
186
184
213
211
174
172
192
215
180
215
192
176

Fig. 6

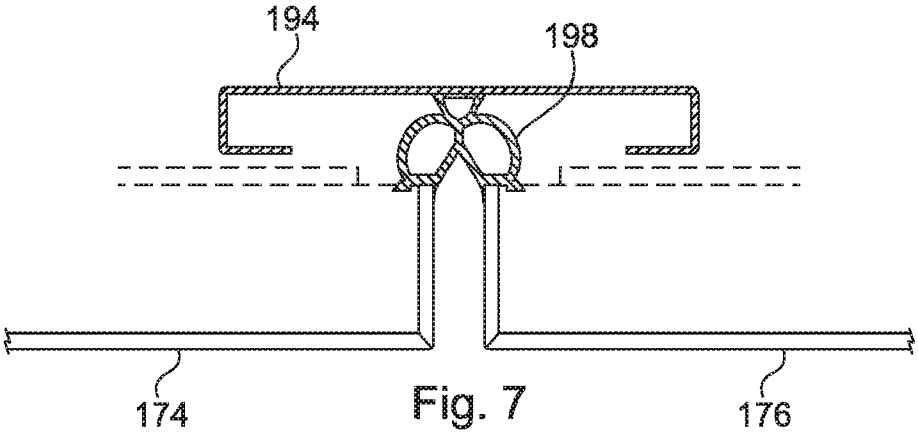
194
198
174
176

Fig. 7

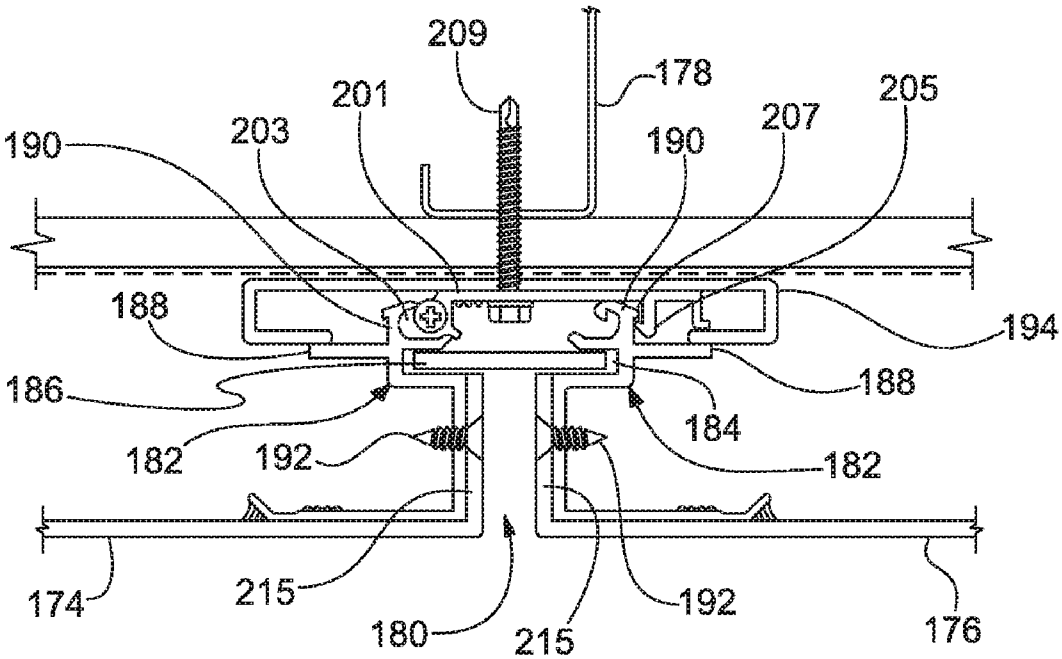
209
178
201
205
203
207
190
190
188
194
186
188
184
182
192
182
174
215
180
215
192
176

Fig. 8

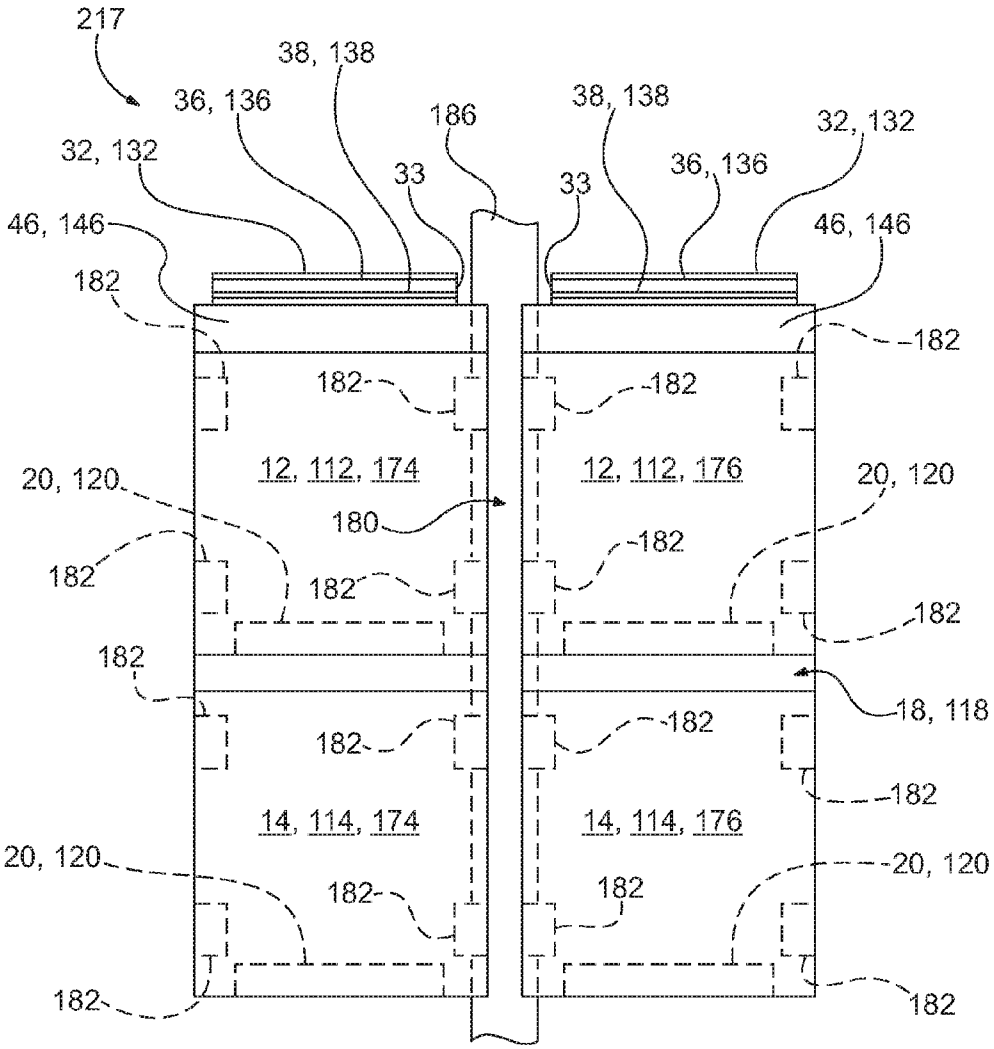
217
38, 138
36, 136
186
38, 138
32, 132
32, 132
33
33
36, 136
46, 146
46, 146
182
182
182
182
12, 112, 174
12, 112, 176
20, 120
20, 120
180
182
182
182
182
182
18, 118
182
182
182
14, 114, 174
14, 114, 176
20, 120
20, 120
182
182
182
182

Fig. 9

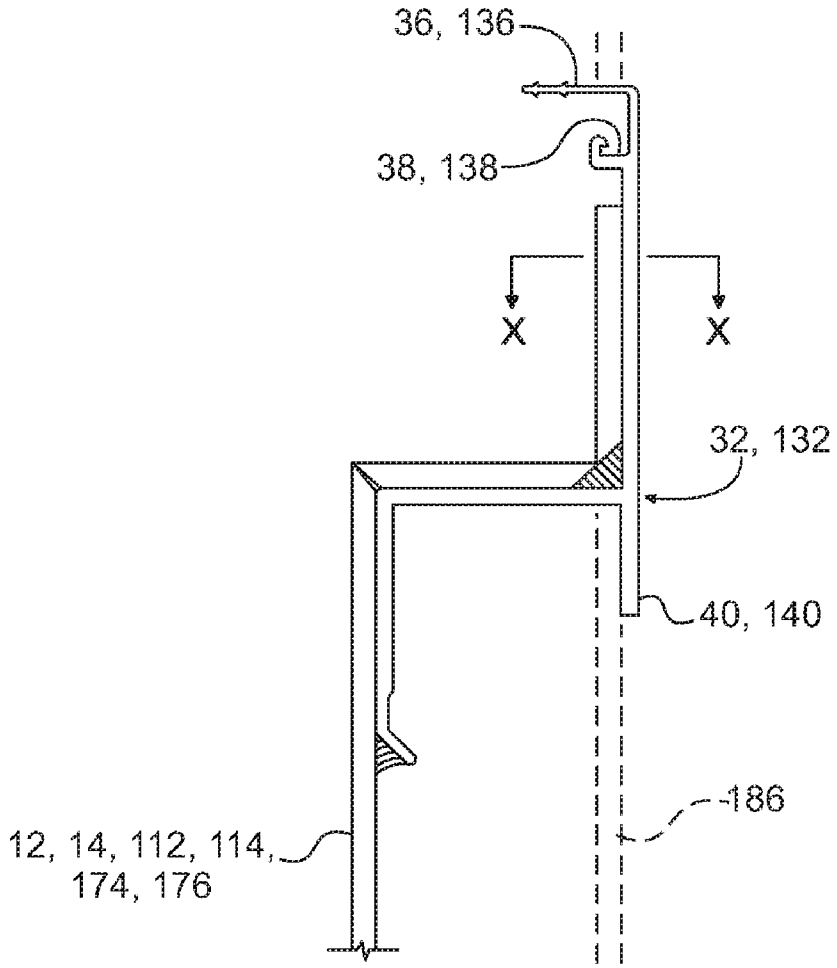
36, 136
38, 138
X
X
32, 132
40, 140
186
12, 14, 112, 114,
174, 176

Fig. 10

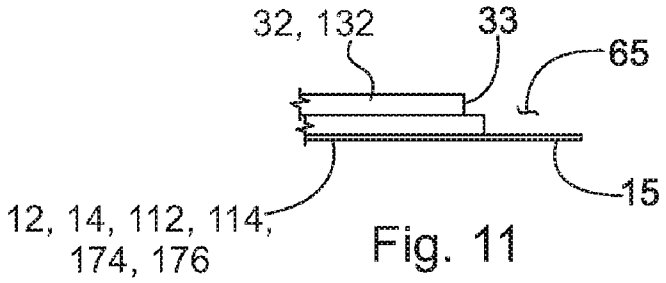
32, 132
33
65
15
12, 14, 112, 114,
174, 176

Fig. 11

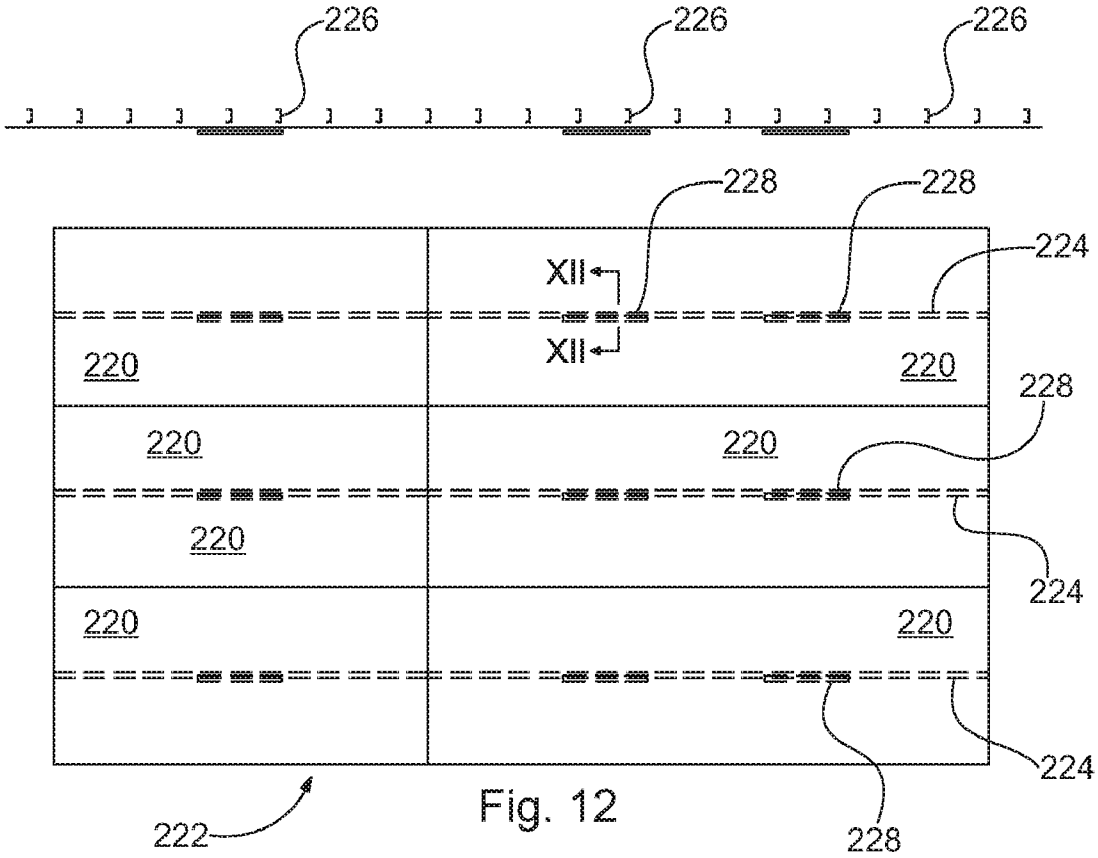
226
226
226
228
228
224
XII
XII
220
220
228
220
220
220
224
220
220
224
222
228

Fig. 12

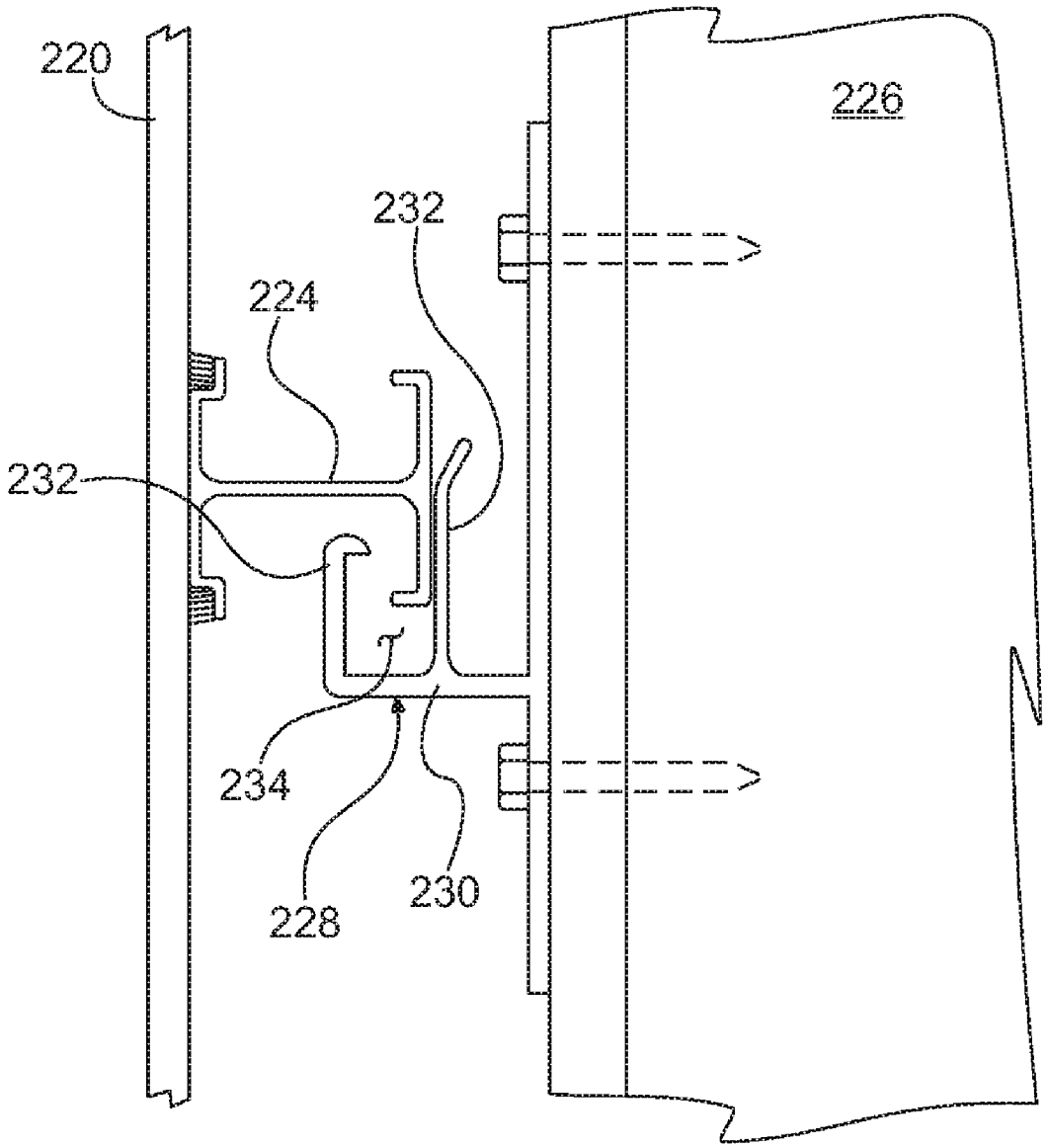

Fig. 13

DRAINED AND BACK VENTILATED THIN COMPOSITE WALL CLADDING SYSTEM

CROSS REFERENCE TO RELATED APPLICATIONS

[0001] This application claims the benefit of U.S. Provisional Application No. 61/326,061, filed Apr. 20, 2010, the entire content of which is hereby incorporated by reference.

BACKGROUND OF THE INVENTION

[0002] 1. Field of the Invention

[0003] The present invention is directed toward composite wall panel systems and, more particularly, towards drained and back ventilated composite wall panel systems.

[0004] 2. Description of Related Art

[0005] Thin composite architectural wall panels are generally manufactured by laminating metal skins to a plastic core. These sheets are typically shipped to a fabricator where they are cut to size and routed so as to return the edges around the perimeter. Typically, extrusions are fabricated and applied to the panel perimeter to create panel joinery. Also, stiffeners are typically applied in the field of the panel, i.e., the major flattened portion, to reduce the bowing of the thin panel under load. The terms "thin composite panel" and "thin composite architectural panel" generally relate to a genre of architectural panels, configured substantially as described above, where a thickness dimension as measured between opposing faces in the field of the panel can generally be between about 4 mm and about 8 mm, though a greater range of thicknesses, such as less than about 15 mm or less than about 10 mm are also utilized.

[0006] Referring to FIG. **1**, upper and lower panels **1**, **2** each include an extrusion **4** at the panel perimeter, as discussed above, at a horizontal joint **5** defined between the panels **1**, **2**. The extrusions **4** define a recess **6** to receive a spline **7**. Typically, the extrusions **4** are fabricated and applied to the perimeter of the panels **1**, **2**, as noted above. The extrusions **4** are generally mitered at the corners to create the panel joinery around the panel perimeter. At the horizontal joint **5**, the recess **6** may become a water trap and channel water to an interior side **8** of the panels **1**, **2**.

SUMMARY OF THE INVENTION

[0007] A wall panel includes a panel body, a first jamb clip, a second jamb clip, a bottom member, and an attachment clip. The first jamb clip is positioned adjacent to a right side of the panel body and the second jamb clip is positioned adjacent to a left side of the panel body. The first and second jamb clips are configured to receive a portion of a spline. The bottom member has an engagement portion and is positioned adjacent to a bottom end of the panel body. The attachment clip is positioned adjacent to an upper end of the panel body and has an engagement receiving portion configured to engage an engagement portion of an adjacent panel. The bottom end of the panel body is configured to define a ventilation gap when joined to an adjacent panel.

[0008] The engagement portion of the bottom member may extend upward, and the engagement receiving portion of the attachment clip may comprise a downwardly opening channel. The engagement portion of the bottom member may also extend downward, and the engagement receiving portion of the attachment clip may comprise an upwardly opening channel. The wall panel may also include a rail member positioned adjacent to an upper end of the panel body with the panel body positioned between the attachment clip and the rail member. The rail member may have an extension that extends outward and the rail member and the attachment clip may have cooperating engagement member. The wall panel may include a stiffener secured to the panel body and the stiffener may be secured to the bottom member via a stiffener clip. The stiffener clip may have an extension extending downward and the extension may engage a stiffener receiving portion of the bottom member. An upper portion of the stiffener clip may be secured to the stiffener via a fastener. The stiffener may extend along a longitudinal direction of the panel body. The upper end of the panel may include a return portion configured to define a horizontal drain shelf. The return portion of the upper end of the panel may be L-shaped in cross-section.

[0009] In another embodiment, a wall panel system includes a first panel having a bottom member positioned adjacent to a bottom end of the first panel, and a second panel positioned adjacent to the first panel and defining a horizontal joint. The second panel has an attachment clip positioned adjacent to an upper end of the second panel. The attachment clip engages the bottom member, and the bottom end of the first panel and the upper end of the second panel define a ventilation gap.

[0010] The second panel may have a rail member positioned adjacent to the upper end of the second panel with the rail member having an extension that extends outward and the extension defining an upper end of the ventilation gap and configured to deflect fluid entering the horizontal joint. The rail member and the attachment clip may each have an engagement member with the engagement members of the rail member and the attachment clip being engaged with each other. The bottom member may have an engagement portion and the attachment clip may have an engagement receiving portion with the engagement portion of the bottom member engaging the engagement receiving member of the attachment clip. The first panel may have a jamb clip positioned adjacent to a right side of the first panel with the jamb clip configured to receive a portion of a spline. The wall panel system may further include a third panel positioned adjacent to the first panel and defining a vertical joint. The first panel and the third panel may each have a jamb clip positioned adjacent to the vertical joint with the respective jamb clips of the first and third panels defining a receptor. The wall panel system may also include a spline received by the receptor.

[0011] In a further embodiment, a wall panel system includes a panel having a first jamb clip positioned adjacent to a right side of the panel, a second jamb clip positioned adjacent to a left side of the panel, a bottom member positioned adjacent to a bottom end of the panel and between the first and second jamb clips, an attachment clip positioned adjacent to an upper end of the panel, and a stiffener extending along a longitudinal direction of the panel body. The wall panel system also includes a support and a stiffener clip having a stiffener receiving portion. The stiffener clip is secured to the support and the stiffener receiving portion engages the stiffener. The stiffener may be positioned at about a midpoint of a short dimension of the panel.

BRIEF DESCRIPTION OF THE DRAWINGS

[0012] FIG. **1** is a sectional view of a conventional thin composite wall cladding system at a horizontal joint;

[0013] FIG. **2** is a sectional view of a wall panel system at a horizontal joint according to one embodiment of the present invention;

[0014] FIG. **3** is a sectional view of the wall panel system shown in FIG. **2**, showing the wall panel system between attachment clips;

[0015] FIG. **4** is a sectional view of a of a wall panel system at a horizontal joint according to a further embodiment of the present invention;

[0016] FIG. **5** is a sectional view of the wall panel system shown in FIG. **4**, showing the wall panel system between attachment clips;

[0017] FIG. **6** is a sectional view of a wall panel system at a vertical joint according to one embodiment of the present invention;

[0018] FIG. **7** is a sectional view of wall panel system at a vertical joint according to a further embodiment of the present invention;

[0019] FIG. **8** is a sectional view of a wall panel system at a vertical joint according to another embodiment of the present invention;

[0020] FIG. **9** is an elevational view of a wall panel system according to one embodiment, showing wall panels in an installed position;

[0021] FIG. **10** is a sectional view of the wall panel systems shown in FIGS. **2** and **4**, showing a vertical spline at a horizontal joint;

[0022] FIG. **11** is a sectional view taken along the line X-X in FIG. **10**;

[0023] FIG. **12** is a schematic elevational view of a wall panel system according to one embodiment, showing placement of stiffener clips; and

[0024] FIG. **13** is a sectional view taken along the line XII-XII in FIG. **12**.

DESCRIPTION OF THE PREFERRED EMBODIMENTS

[0025] The present invention will now be described with reference to the accompanying figures. For purposes of the description hereinafter, the terms "upper", "lower", "right", "left", "vertical", "horizontal", "top", "bottom" and derivatives thereof shall relate to the invention as it is oriented in the drawing figures. However, it is to be understood that the invention may assume various alternative variations and step sequences, except where expressly specified to the contrary. It is to be understood that the specific apparatus illustrated in the attached figures and described in the following specification is simply an exemplary embodiment of the present invention. Hence, specific dimensions and other physical characteristics related to the embodiments disclosed herein are not to be considered as limiting.

[0026] Referring to FIGS. **2** and **3**, a wall panel system **10** according to one embodiment includes upper and lower panels **12**, **14** secured to a support **16**, such as a sub-frame, and defining a horizontal joint **18**. The panels **12**, **14** each have a generally rectangular (or square) panel body formed by laminating metal skins to a plastic core, although other panel configurations may be utilized. The sub-frame is typically secured to a structural framing member, such as a stud, with a thermal, vapor, and air and water barrier positioned between the structural framing and the sub-frame. The supports **16** are typically spaced apart along a building structure (not shown). The upper panel **12** includes a bottom member **20** that extends along a bottom end **22** of the upper panel **12**. The bottom member **20** is a continuous extrusion that includes an engagement portion **24** and a pair of stiffener receiving portions **26**. The bottom member **20** is secured to the upper panel **12** via a fastener **28**, such as a screw or rivet, that extends through the bottom member **20** and a return portion **30** of the upper panel **12**. The lower panel **14** includes a rail **32** that extends along an upper end **34** of the lower panel **14**. The rail **32** is a continuous extrusion generally having a Z-shape and defining an upper extension **36**, an engagement portion **38**, and a lower leg portion **40**. The lower panel **14** is secured to the support **16** via an attachment clip **42**. In particular, a fastener **44** extends through the attachment clip **42**, through a return portion **46** of the lower panel **14**, through the rail **32** and into the support **16**.

[0027] The attachment clip **42** is positioned between the bottom member **20** and the rail **32** at the support **16**. The return portion **46** of the panel **14** is positioned between the attachment clip **42** and the rail **32**. The attachment clip **42** includes an upper engagement member **48** and an engagement receiving portion **50**. The upper engagement member **48** of the attachment clip **42** is received by the engagement portion **38** of the rail **32** and the engagement portion **24** of the bottom member **20** is received by the engagement receiving portion **50**. In particular, the engagement portion **24** of the bottom member **20** extends generally upward to be received and engaged by the engagement receiving portion **50** of the attachment clip **42** thereby securing the upper panel **12** to the attachment clip **42**. The engagement receiving portion **50** is a channel that opens downward and includes a ledge for engaging the engagement portion **24**. The engagement portion **24** and the engagement receiving portion **50** may be secured to each other through cooperating structure, such as through a friction fit arrangement, detent arrangement, or any other suitable arrangement.

[0028] Referring again to FIG. **2**, the upper panel **12** may include a stiffener **52** that is secured to the upper panel **12** via a stiffener clip **54** having an upper portion **56** and a lower portion **58** with a pair of extensions **60**. The stiffener clip **54** is secured to the stiffener **52** via a fastener **62**, such as a screw, extending through the upper portion **56** of the stiffener clip **54** and into the stiffener **52**. The pair of extensions **60** of the stiffener clip **54** is received by the stiffener receiving portions **26** of the bottom member **20**. The pair of extensions **60** of the stiffener clip **54** and the stiffener receiving portions **26** of the bottom member **20** engage each other through cooperating structure, such as through a friction fit arrangement, detent arrangement, or any other suitable arrangement. The lower panel **14** may also include a stiffener **64** that is secured to the rail **32** of the lower panel **14** via a fastener **66**, such as a screw, extending through the lower leg portion **40** of the rail **32** and into the stiffener **64**.

[0029] The return portion **46** of the upper end **34** of the lower panel **14** is generally L-shaped and defines a horizontal water shedding drain shelf. Further, the upper end **34** of the panel **14** and the rail **32** generally define a Z-shape at the horizontal joint **18**. Water that may enter the horizontal joint **18** will contact the horizontal drain shelf and will be directed back out of the horizontal joint **18**. As discussed above, the lower panel **14** is positively fastened to the support **16** and captures the lower panel **14** and the rail **32** such that wall panel system **10** does not have to solely rely upon adhesives to hold the panel **14** onto the rail **32**. Further, as shown more clearly in FIG. **3**, the upper extension **36** of the rail **32** and the bottom member **20** define a ventilation gap **68** without allowing a substantial amount of water penetration through the gap **68**.

In particular, the upper extension **36** of the rail **32** is configured to deflect fluid and keep wind blown water to the exterior and out of the panel cavity, i.e., between the wall panel system and the air and water barrier behind the panels. As shown in FIG. **2**, a screen **70** may be positioned between the upper extension **36** of the rail **32** and the bottom member **20** to prevent bugs from passing through this area. Further, as shown in FIG. **3**, the upper and lower panels **12**, **14** define a space **69** behind the rail **32** between attachments to the support **16** for back ventilation.

[0030] Referring to FIGS. **4** and **5**, a wall panel system **110** according to a further embodiment is disclosed. The wall panel system **110** shown in FIGS. **4** and **5** is similar to the wall panel system **10** described above. The wall panel system **110** includes upper and lower panels **112**, **114** secured to a support **116** and defining a horizontal joint **118**. The panels **112**, **114** each have a generally rectangular (or square) panel body formed by laminating metal skins to a plastic core, although other panel configurations may be utilized. The upper panel **112** includes a bottom member **120** that extends along a bottom end **122** of the upper panel **112**. The bottom member **120** is a continuous extrusion that includes an engagement portion **124** and a pair of stiffener receiving portions **126**. The bottom member **120** is secured to the upper panel **112** via a fastener **128**, such as a screw, that extends through the bottom member **120** and a return portion **130** of the upper panel **112**. The lower panel **114** includes a rail **132** that extends along an upper end **134** of the lower panel **114**. The rail **132** is a continuous extrusion generally having a Z-shape and defining an upper extension **136**, an engagement portion **138**, and a lower leg portion **140**.

[0031] The lower panel **114** is secured to the support **116** via an attachment clip **142**. In particular, a fastener **144** extends through the attachment clip **142**, through a return portion **146** of the lower panel **114**, through the rail **132** and into the support **116**. The attachment clip **142** is positioned between the bottom member **120** and the rail **132** at the support **116**. The attachment clip **142** includes an upper engagement portion **148** and an engagement receiving portion **150**. The upper engagement portion **148** of the attachment clip **142** is received by the engagement portion **138** of the rail **132** and the engagement portion **124** of the bottom member **120** is received by the engagement receiving portion **150**. In particular, the engagement portion **124** of the bottom member **120** extends generally downward to be received and engaged by the engagement receiving portion **150** of the attachment clip **142**. The engagement receiving portion **150** is a channel that opens upward and includes a ledge for engaging the engagement portion **124**. The engagement portion **124** and the engagement receiving portion **150** may be secured to each other through cooperating structure, such as through a friction fit arrangement, detent arrangement, or any other suitable arrangement. Accordingly, the upper panel **112** may be dropped into place with the engagement portion **124** of the bottom member **120** being received and engaged by the engagement receiving portion **150** of the attachment clip **142** thereby securing the upper panel **112** to the attachment clip **142**.

[0032] Referring again to FIG. **4**, the upper panel **112** may include a stiffener **152** that is secured to upper panel **112** via stiffener clip **154** having an upper portion **156** and a lower portion **158** having a pair of extensions **160**. The stiffener clip **154** is secured to the stiffener **152** via fastener **162**, such as a screw, extending through the upper portion **156** of the stiffener clip **154** and into the stiffener **152**. The pair of extensions **160** of the stiffener clip **154** is received by the stiffener receiving portions **126** of the bottom member **120**. The pair of extensions **160** of the stiffener clip **154** and the stiffener receiving portions **126** of the bottom member **120** engage each other through cooperating structure, such as through a friction fit arrangement, detent arrangement, or any other suitable arrangement. The lower panel **114** may also include a stiffener **164** that is secured to the rail **132** of the lower panel **114** via a fastener **166**, such as a screw, extending through the lower leg portion **140** of the rail **132** and into the stiffener **164**. As shown in FIG. **4**, a screen **170** may be positioned between the upper extension **136** of the rail **132** and the bottom member **120** to prevent bugs from passing through this area. Further, as shown in FIG. **5**, the upper and lower panels **112**, **114** define a space **169** behind the rail **132** between attachments to the support **116** for back ventilation.

[0033] The primary difference between the wall panel system **10** shown in FIGS. **2** and **3** and the wall panel system **110** shown in FIGS. **4** and **5** is the engagement arrangement between the bottom members **20**, **120** and the attachment clips **32**, **132**. The hook and grab style arrangement shown in FIGS. **2** and **3** may allow for a more aggressive and high load capacity engagement. The remaining features and benefits, as discussed above, are similar for the wall panel systems **10**, **110**.

[0034] Referring to FIG. **6**, a wall panel system **172** according to one embodiment includes left and right panels **174**, **176** secured to a support **178** defining a vertical joint **180**. The panels **174**, **176** each have a generally rectangular (or square) panel body formed by laminating metal skins to a plastic core, although other panel configurations may be utilized. The left and right panels **174**, **176** each have a jamb clip **182** positioned at respective ends of the panels **174**, **176** adjacent the vertical joint **180**. The jamb clips **182** of the left and right panels **174**, **176** define a receptor **184** for receiving a vertical spline **186**. In particular, each of the jamb clips **182** defines a channel extending the length of the jamb clips **182** that receives a portion of the spline **186**. Each of the jamb clips **182** also includes an attachment leg **188** and a bracket receiving portion **190**. The jamb clips **182** are secured to respective panels **174**, **176** via a fastener **192**, such as a screw, extending through the respective panels **174**, **176** and jamb clips **182** at the vertical joint **180**. A vertical channel **194** is positioned between the support **178** and the jamb clips **182** and allow the panels **174**, **176** to be attached to a single stud via a fastener **196**, such as a screw. The support **178** may be a bare stud or a stud with sheathing. Insulation, an air, water, vapor barrier, or an insulated composite panel may be positioned between the support **178** and the vertical channel **194**. The vertical channel **194** is configured to channel any water that may enter the vertical joint **180** to the base detail (not shown) without contacting an air and water barrier (not shown) behind the panels **174**, **176**. As shown in FIG. **7**, the jamb clips **182** may be eliminated when gasketed vertical joints **198** are utilized. The bracket receiving portion **190** of the jamb clips **182** may receive a fastener bracket **201** to allow attachment of panels **174**, **176** along the vertical edge. The fastener bracket **201** may be a single bracket having an extension **203** for engaging respective bracket receiving portions **190** or may be provided as individual brackets on each panel **174**, **176**.

[0035] As shown in FIG. **8**, a fastener bracket **201** may be provided as a single member with an extension **203** for engaging the bracket receiving portion **190** of one jamb clip **182** and

an engagement member **205** for engaging an engagement receiving portion **207** of the other jamb clip **182**. A fastener **209**, such as a screw, extends through the fastener bracket **201** for positive panel attachment directly to the channel **194**. Furthermore, the securing of the panels **174**, **176** to the support **178** through the fastener bracket **201** and channel **194** provides a direct method to take out the dead load of the panel system **172**. The attachment leg **188** of the respective jamb clips **182** allows attachment of horizontally oriented stiffeners **211** of the left and right panels **174**, **176** via a fastener **213**, such as a screw. A return portion **215** of the left and right panels **174**, **176** is also configured to act as a stiffener at the panel edge.

[0036] The wall panel systems **10**, **110** show stiffeners **52**, **64**, **152**, **164** extending in a vertical direction or parallel to the vertical edge of the panels **12**, **14**, **112**, **114**. The wall panel system **172** shows stiffeners **211** extending in a horizontal direction or parallel to a horizontal edge of the panels **174**, **176**. A wall panel having the horizontal joint arrangements shown in FIGS. **2-5** and the vertical joint arrangement shown in FIG. **6** would typically only have stiffeners extending in either the vertical or horizontal direction.

[0037] Referring to FIG. **9**, a wall panel system **217** may be provided that includes the drained horizontal joint arrangements shown in FIGS. **2-5** along with the splined vertical joint arrangement shown in FIG. **6** to provide the advantages of the spline design for the vertical joint while using a positive drained joint on the horizontal joint. In particular, a first panel **12**, **112**, **174** is positioned above a second panel **14**, **114**, **174** with the bottom end of the first panel **12**, **112**, **174** positioned adjacent to an upper end of the second panel **14**, **114**, **174** and defining the horizontal joint **18**, **118**. A third panel **12**, **112**, **176** is positioned to the right of the first panel **12**, **112**, **174** with the right side of the first panel **12**, **112**, **174** positioned adjacent to the left side of the third panel **12**, **112**, **176** and defining the vertical joint **180**. A fourth panel **14**, **114**, **176** is also positioned below the third panel **12**, **112**, **176** and to the right of the second panel **14**, **114**, **174**. As discussed above in connection with FIGS. **2-5**, each of the panels **12**, **14**, **112**, **114**, **174**, **176** have bottom members **20**, **120** positioned along the bottom edge of the panels **12**, **14**, **112**, **114**, **174**, **176**. The bottom members **20**, **120** are spaced from the vertical edges or sides of the panels **12**, **14**, **112**, **114**, **174**, **176** and are free from engagement with the jamb clips **182**. Thus, the bottom members **20**, **120** do not fully extend to the vertical joint **180** or jamb and does not require mitered or notched extrusions.

[0038] Referring again to FIG. **9**, the panels **12**, **14**, **112**, **114**, **174**, **176** also include jamb clips **182** that receive the spline **186** along the vertical edges of the panels **12**, **14**, **112**, **114**, **174**, **176** as discussed above in connection with FIGS. **6** and **8**. The jamb clips **182** are spaced apart along the vertical edges of the panels **12**, **14**, **112**, **114**, **174**, **176**, but a single jamb clip **182** that extends for most of the panel edge could also be utilized. The jamb clips **182** may be spaced from each other approximately 12-18" on center. The panels **12**, **14**, **112**, **114**, **174**, **176**, however, may include a gasketed vertical joint as shown in FIG. **7** rather than providing the jamb clips **182**. Although not shown, the panels **12**, **14**, **112**, **114**, **174**, **176** would also include one or more spaced apart attachment clips **42**, **142** as discussed above in connection with FIGS. **2-5**. As shown in FIGS. **3** and **5**, for example, the wall panel system of the present invention provides air/ventilation behind the system to promote drying should the cavity become wetted while minimizing the amount of water getting behind the panel. Further, as shown in FIGS. **10** and **11**, an outer face **15** of the panels **12**, **14**, **112**, **114**, **174**, **176** and an end **33** of the rail **32**, **132** define a notch **65** for receiving the vertical spline **186**. In particular, the panels **12**, **14**, **112**, **114**, **174**, **176** are notched back leaving the outer face **15**.

[0039] Referring to FIGS. **12** and **13**, a plurality of wall panels **220** are positioned adjacent to each other thereby forming a wall panel system **222**. The wall panels **220** may have the horizontal joint arrangements and the vertical joint arrangements as described above in connection with FIGS. **2-6**. The wall panels **220** each have a stiffener **224** extending a longitudinal direction of the panels **220**. The stiffeners **224** are generally I-shaped in cross section, although other suitably shaped stiffeners may be utilized. The stiffeners **224** are positioned at about a midpoint of the panels **220** relative to a short dimension of the panels **220**. The panels **220** are secured to a support **226** in any suitable manner such as that described above in connection with wall panel systems **10**, **110**, **172** shown in FIGS. **2-6**. As shown in FIGS. **12** and **13**, a stiffener clip **228** is secured to one or more of the supports **226**. The stiffener clip **228** has a stiffener receiving portion **230** for engaging and receiving the stiffeners **224**. The top of FIG. **12** schematically shows the positioning of the stiffener clips **228** relative to the panels **220** and the supports **226**. The stiffener receiving portion **230** has a pair of extensions **232** defining a channel **234** therebetween. The longitudinal stiffener **224** is received by the stiffener receiving portion **230**, which is configured to take positive and negative loads exerted on the panels **220**. In particular, the stiffener **224** engages the stiffener clip **228** such that positive loads exerted on the panel **220** are almost immediately supported by the stiffener clip **228**. Further, the stiffener **224** is spaced from one of the extensions **232** of the stiffener clip **228** such that negative loads exerted on the panel **220** will cause the panel **220** to defect outward before the load is transferred to the stiffener clip **228**. The longitudinal stiffeners **224** and the stiffener clips **228** substantially eliminate surface deformation of the panels (also known as oil canning) while substantially minimizing stiffener read through.

[0040] While several embodiments were described in the foregoing detailed description, those skilled in the art may make modifications and alterations to these embodiments without departing from the scope and spirit of the invention. Accordingly, the foregoing description is intended to be illustrative rather than restrictive.

The invention claimed is:

1. A wall panel comprising:

a panel body;

a first jamb clip positioned adjacent to a right side of the panel body;

a second jamb clip positioned adjacent to a left side of the panel body, the first and second jamb clips each configured to receive a portion of a spline;

a bottom member positioned adjacent to a bottom end of the panel body, the bottom member having an engagement portion; and

an attachment clip positioned adjacent to an upper end of the panel body, the attachment clip having an engagement receiving portion configured to engage an engagement portion of an adjacent panel, the bottom end of the panel body configured to define a ventilation gap when joined to an adjacent panel.

2. The wall panel of claim **1**, wherein the engagement portion of the bottom member extends upward, and wherein

the engagement receiving portion of the attachment clip comprises a downwardly opening channel.

3. The wall panel of claim **1**, wherein the engagement portion of the bottom member extends downward, and wherein the engagement receiving portion of the attachment clip comprises an upwardly opening channel.

4. The wall panel of claim **1**, further comprising a rail member positioned adjacent to an upper end of the panel body, the panel body positioned between the attachment clip and the rail member.

5. The wall panel of claim **4**, wherein the rail member has an extension that extends outward.

6. The wall panel of claim **4**, wherein the rail member and the attachment clip have cooperating engagement members.

7. The wall panel of claim **1**, further comprising a stiffener secured to the panel body, the stiffener secured to the bottom member via a stiffener clip.

8. The wall panel of claim **7**, wherein the stiffener clip has an extension extending downward, the extension engaging a stiffener receiving portion of the bottom member.

9. The wall panel of claim **7**, wherein an upper portion of the stiffener clip is secured to the stiffener via a fastener.

10. The wall panel of claim **1**, wherein the upper end of the panel includes a return portion configured to define a horizontal drain shelf.

11. The wall panel of claim **10**, wherein the return portion of the upper end of the panel is L-shaped in cross-section.

12. A wall panel system comprising:

a first panel having a bottom member positioned adjacent to a bottom end of the first panel;

a second panel positioned adjacent to the first panel and defining a horizontal joint, the second panel having an attachment clip positioned adjacent to an upper end of the second panel,

wherein the attachment clip engages the bottom member, and wherein the bottom end of the first panel and the upper end of the second panel define a ventilation gap.

13. The wall panel system of claim **12**, wherein the second panel has a rail member positioned adjacent to the upper end of the second panel, the rail member having an extension that extends outward, the extension defining an upper end of the ventilation gap and being configured to deflect fluid entering the horizontal joint.

14. The wall panel system of claim **13**, wherein the rail member and the attachment clip each have an engagement member, the engagement members of the rail member and the attachment clip being engaged with each other.

15. The wall panel system of claim **12**, wherein the bottom member has an engagement portion and the attachment clip has an engagement receiving portion, the engagement portion of the bottom member engaging the engagement receiving member of the attachment clip.

16. The wall panel system of claim **12**, wherein the first panel has a jamb clip positioned adjacent to a right side of the first panel, the jamb clip configured to receive a portion of a spline.

17. The wall panel system of claim **12**, further comprising a third panel positioned adjacent to the first panel and defining a vertical joint, the first panel and the third panel each having a jamb clip positioned adjacent to the vertical joint, the respective jamb clips of the first and third panels defining a receptor that receives a spline.

18. The wall panel system of claim **12**, wherein the upper end of the second panel includes a return portion configured to define a horizontal drain shelf.

19. A wall panel system comprising:

a panel having a first jamb clip positioned adjacent to a right side of the panel, a second jamb clip positioned adjacent to a left side of the panel, a bottom member positioned adjacent to a bottom end of the panel and between the first and second jamb clips, an attachment clip positioned adjacent to an upper end of the panel, and a stiffener extending along a longitudinal direction of the panel body;

a support; and

a stiffener clip having a stiffener receiving portion,

wherein the stiffener clip is secured to the support and the stiffener receiving portion engages the stiffener.

20. The wall panel system of claim **19**, wherein the stiffener is positioned at about a midpoint of a short dimension of the panel.

* * * * *