(No Model.) 2 Sheets—Sheet 1.

W. E. DEAN.

AIR CUSHION FOR NIGGER BARS.

No. 590,213. Patented Sept. 21, 1897.

Fig. 1.

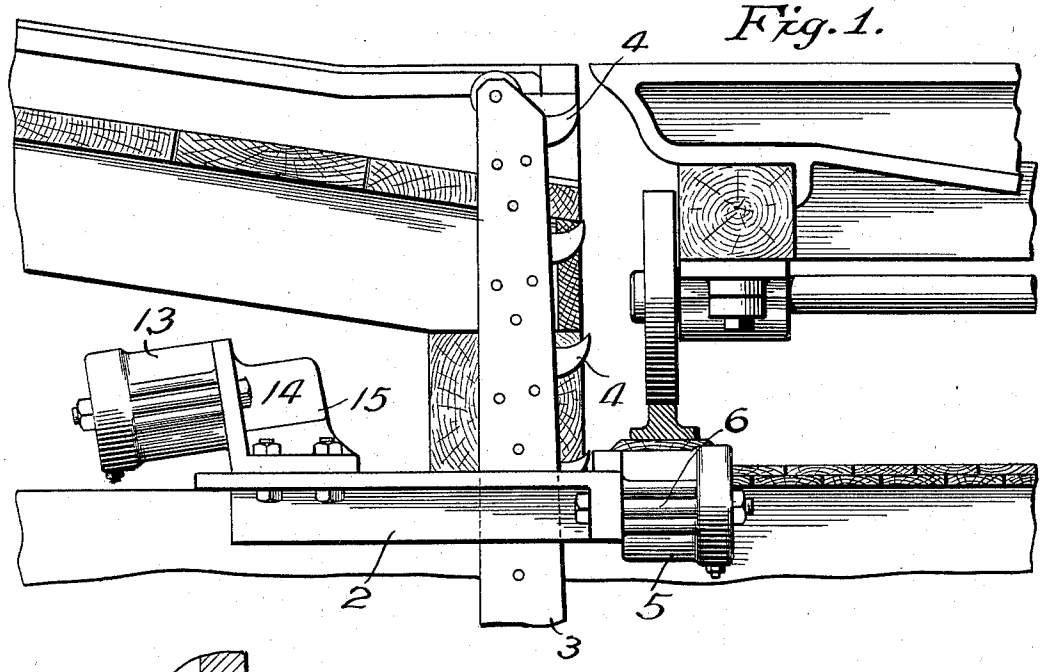

Fig. 6.

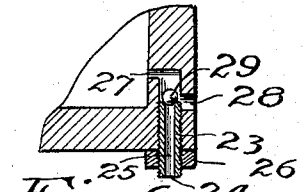

Fig. 2.

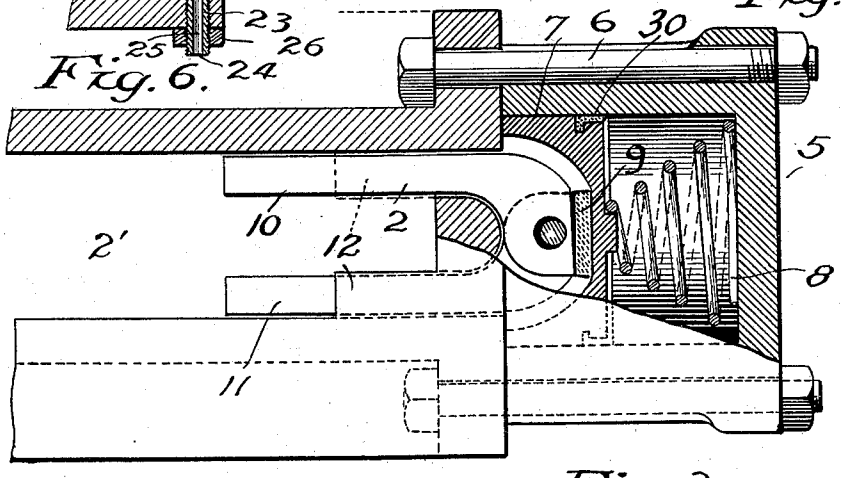

Fig. 3.

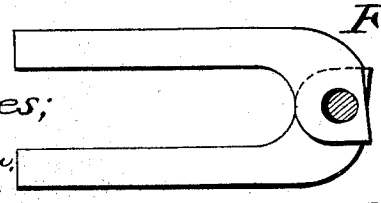

Witnesses;
C. E. Van Dorn.
Richard Paul.

Inventor;
William E. Dean.
By Paul & Hawley
his Attorneys.

THE NORRIS PETERS CO., PHOTO-LITHO., WASHINGTON, D. C.

(No Model.) 2 Sheets—Sheet 2.

W. E. DEAN.

AIR CUSHION FOR NIGGER BARS.

No. 590,213. Patented Sept. 21, 1897.

Fig. 4.

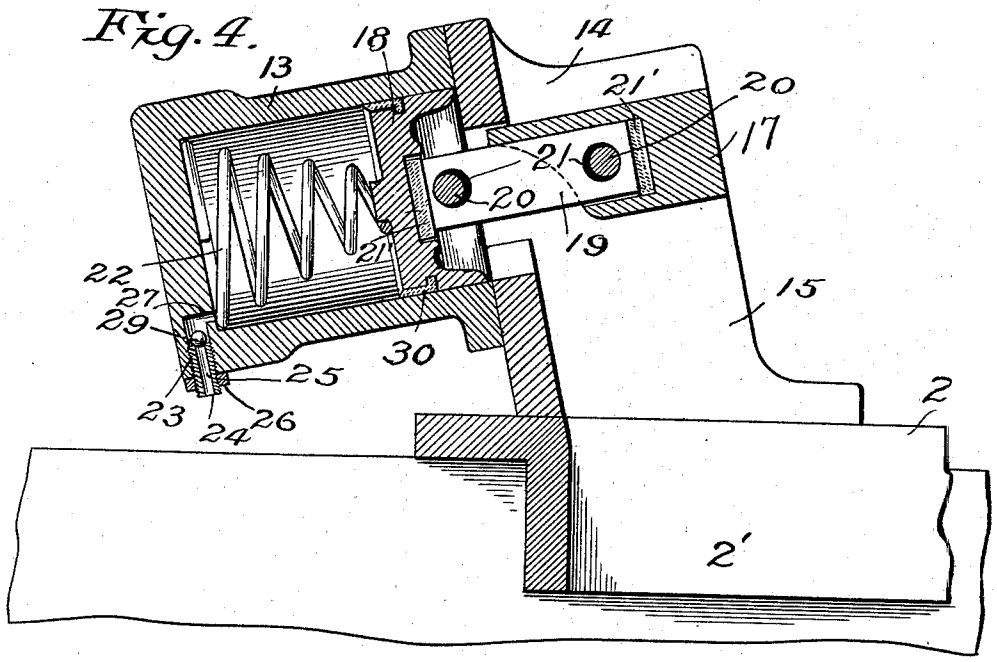

Fig. 5.

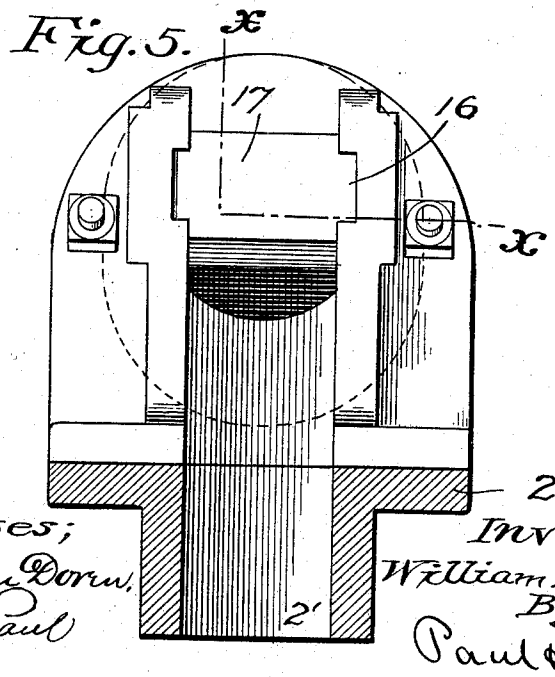

Witnesses;
C. E. Van Dorn.
Richard Paul

Inventor;
William E. Dean.
By
Paul & Hawley
his Attorneys.

THE NORRIS PETERS CO., PHOTO-LITHO., WASHINGTON, D. C.

UNITED STATES PATENT OFFICE.

WILLIAM E. DEAN, OF WEST DULUTH, MINNESOTA.

AIR-CUSHION FOR NIGGER-BARS.

SPECIFICATION forming part of Letters Patent No. 590,213, dated September 21, 1897.

Application filed October 23, 1896. Serial No. 609,846. (No model.)

To all whom it may concern:

Be it known that I, WILLIAM E. DEAN, of West Duluth, county of St. Louis, State of Minnesota, have invented certain new and useful Improvements in Air-Cushions for Nigger-Bars, of which the following is a specification.

My invention relates to air-cushions for use with steam nigger-bars in sawmills; and the object I have in view is to provide means for lessening the shock to the floor-plate and nigger-bar when the latter is thrown back and forth during the operation of turning the log.

My invention consists generally in the combination of a floor-plate with air-cushions arranged in the front and rear of the same to receive the impact of the tooth-bar, and, further, in various constructions and combinations, all as hereinafter described, and particularly pointed out in the claims.

In the drawings forming part of this specification, Figure 1 is a side elevation of a steam nigger-bar and floor-plate, showing the arrangement of the air-cushions. Fig. 2 is a longitudinal section of the forward air-cushion. Fig. 3 is a detail view of the pivoted arms forming a part of the cushion shown in Fig. 2. Fig. 4 is a longitudinal sectional view of the rear cushion. Fig. 5 is an end view thereof. Fig. 6 is a detail view showing the air-valve arranged in the end of the cylinder.

In the drawings, 2 represents the floor-plate, which is secured to the flooring of the mill beneath the log-deck and carriage and is provided with the usual longitudinal slot 2′ to receive the nigger-bar 3, having the teeth 4 of the ordinary style. Above the plate 2 and at the right and left of the nigger-bar is shown the log-deck and the carriage, which are of the ordinary construction and need not be described.

In front of the bar 3 and directly beneath the carriage-track I provide an air-cushion comprising the cylinder 5, secured to the floor-plate 2 at the end of the longitudinal slot 2′ by bolts 6 or in any other suitable manner. Within the cylinder is the piston 7, between which and the closed head of the cylinder is arranged a coiled spring 8, coiled into a conical form, having its larger end resting upon the closed end of the cylinder and its opposite or smaller end secured to the inner face of the piston 7. The opposite face of the piston is provided with a concave surface, and secured to the piston at the bottom of the depression is a plate 9, of rubber or other suitable yielding material, against the face of which the curved end of the pivoted arms 10 and 11 rest when in their normal position. These arms are loosely pivoted together, the pivot being made somewhat smaller than the hole in the arms through which it passes, for the purpose hereinafter described.

The plate 2 is provided near the air-cushion upon either side of the longitudinal slot with the stops 12, which limit the travel of the nigger-bar in this direction. The arms 10 and 11 are provided with a beveled inner end, so that the corner of each bar bears most heavily upon the rubber plate or block, so that the outer end of the bars are held out against the sides of the slot 2′. At the other end of the floor-plate 2 I provide a second air-cushion comprising the cylinder 13, securely bolted to the bracket 14, which is in turn adjustably secured to the plate 2. This air-cushion is arranged at an incline to receive the blow of the nigger-bar when it is thrown back to an inclined position at the end of the slot opposite the cushion first described.

The bracket 14 is provided with the guides 15, having slots 16, in which the block 17 is arranged to slide and having its inner end connected to the piston 18 by the link 19, having its opposite ends secured, respectively, to the block 17 and the piston 18 by pins 20 passing through openings 21, provided in the ends of the link. These openings are considerably larger than the pins, for the purpose hereinafter described. Between the outer end of the link and the block 17 and between the inner end of the link and the piston I provide blocks 21′, of rubber or other yielding material, and between the inner face of the piston and the cylinder I provide a conical spring 22, arranged within the cylinder in the same manner as the spring in the opposite cylinder, heretofore described, and adapted to be compressed when the piston is forced into the cylinder.

In the cylinder-head I provide a threaded opening 23, the outer end of which is closed by a screw 24, having a central opening 25 and a jam-nut 26. From the inner end of

the opening 23 a small opening or port 27 leads to the interior of the cylinder, and from a point near the middle of the opening 23 a second opening 28 leads to the outer air. A small ball 29 normally rests upon the inner end of the screw or sleeve 24 over the central opening therein. By the adjustment of the screw 24 the passage of air out through the port or opening 28 may be regulated at will. A suitable leather packing 30 is provided around each piston, so that when the same is forced down into the cylinder by the blow of the nigger-bar very little air will escape around the piston, but will be forced down into the cylinder and act as a cushion to break the force of the blow. A similar air-valve is provided on the cylinder first described, which it is not necessary to show in detail.

The operation of the device is as follows: When the nigger-bar is thrown forward, the edges of the bar will come in contact with the ends of the arms 10 and 11, forcing the same against the block 9 and forcing the piston down into the cylinder, thus compressing the air and the spring 8. As before described, the pin passing through the end of the arms is loose in its socket, so that when the bar strikes the arms 10 and 11 the shock of the blow will be taken up by the rubber block and there will be no jar upon the pin or piston. When the piston has been forced nearly to the bottom of the cylinder, the bar will come in contact with the stops 12, which will limit farther movement of the bar in this direction. The stops are arranged with a space between them to admit the teeth 4 when the edges of the bar come in contact with the ends of the stops. When the bar is thrown in the opposite direction, the edge opposite the teeth 4 strike the sliding block 17, forcing the same back in the slot 16. The blow is communicated to the piston and the same forced down into the cylinder and the spring and air compressed, as in the other cushion, while the shock is lessened or taken up by the yielding blocks and the loosely-pivoted link 19. The space beneath the piston is refilled with air through the ports in the cylinder-head, so that no vacuum will be formed to prevent the spring from returning the piston to the outer end of the cylinder, and by moving the sleeve or screw in or out in the threaded opening the passage of air out through the ports or openings may be regulated at will.

The rear cushion may be placed anywhere along the line of travel of the nigger-bar and at any angle, according to the incline of the bar at the point where it is desired to arrest its movement. The cushions will take up the force of the blow of the bar, and thereby all danger of breakage to the bar or floor-plate, steam-piston, or connecting-pin caused by the sudden stopping of the bar will be avoided.

The movement of a steam nigger-bar is quick and jerky, this movement being necessary in turning logs, and it therefore follows that when the bar strikes a fixed object it delivers a sharp spiteful blow, which would either break or damage both the bar and the cushion it strikes unless the cushion was provided with a yielding stem. Furthermore, it is also essential that the stem should be free to move up and down or to one side, as the bar does not always strike the cushion at the same angle, and if the stem was rigid a breakage would surely follow.

Having thus described my invention, I claim as new and desire to secure by Letters Patent—

1. The combination, of a nigger-bar, an air-cylinder, a piston arranged within the same in position to be encountered by said bar near the limit of its stroke, and said piston being provided with a longitudinally-yielding stem, for the purpose set forth.

2. The combination, of a nigger-bar, an air-cylinder, the piston arranged within the same, piston-stem, the yielding block between the end of said stem and said piston, and the outer end of said stem being in position to be encountered by said bar at or near the limit of its stroke, for the purpose set forth.

3. The combination, of a nigger-bar, an air-cylinder arranged near the limit of the movement of said bar, a piston, a spring arranged within said cylinder beneath said piston, the stem loosely pivoted to the outer end of said piston, the yielding block arranged between the end of said stem and said piston, and guides for said bar, for the purpose set forth.

4. The combination, of a floor-plate, the longitudinal slot therein, the nigger-bar arranged to move back and forth in said slot, the air-cushion secured to said floor-plate near the limit of the stroke of said bar, said air-cushion comprising a cylinder, the piston within the same, the arms loosely pivoted to said piston and extending into the path of said bar, and the stationary stops carried by said floor-plate in position to be engaged by the edges of said bar, for the purpose set forth.

5. The combination, of a nigger-bar, the inclined cylinder arranged in the path of the same, the piston arranged within said cylinder, a sliding block, a link loosely connecting said block and said piston, the yielding means arranged at the opposite end of said link, the spring within said cylinder beneath said piston, and said sliding block being in position to be encountered by said nigger-bar near the limit of its stroke, for the purpose set forth.

6. The combination, of a slotted floor-plate, a nigger-bar, an air-cylinder adjustably secured to said slotted plate, the piston arranged within said cylinder, a valve, the sliding block arranged in the path of said bar, pivotal connections between said block and said piston, and yielding means at either end of said connection, for the purpose set forth.

7. The combination, of a nigger-bar, an air-

cylinder, the piston arranged within the same, the spring beneath said piston for holding the same near the open end of said cylinder, a valve for permitting the escape of air from said cylinder, means for closing said valve, the piston-stem arranged in the path of said bar, and a yielding connection between said stem and said piston, for the purpose set forth.

8. The combination, of a nigger-bar, the air-cylinder arranged in front of the same, the piston within said cylinder, the arms pivoted to said piston and extending into the path of the bar, the stops for limiting the movement of said bar, the spring within said cylinder for normally holding said piston near the open end thereof, a second air-cylinder arranged behind said nigger-bar, the piston within the same, the sliding block arranged to be encountered by said bar, a loosely-pivoted link connecting said block and said piston, and a spring within said cylinder beneath said piston for normally holding the same near the open end of said cylinder, for the purpose set forth.

9. In a device of the class described, the combination, with the nigger-bar, of a cylinder, the piston, the spring beneath the same, the piston-stem projecting into the path of said bar, and pivotal connections between said piston and said stem, for the purpose set forth.

10. In a device of the class described, the combination, with the reciprocating nigger-bar, of the cylinder and its piston, the arms loosely connected to said piston, and projecting into the path of said bar, and the inner end of said arms being beveled, for the purpose set forth.

In testimony whereof I have hereunto set my hand this 16th day of March, A. D. 1895.

WILLIAM E. DEAN.

In presence of—
A. C. PAUL,
M. E. GOOLEY.