(No Model.)

A. M. TIPPIT.

SHAFT SUPPORT.

No. 590,174. Patented Sept. 14, 1897.

Fig. 1.

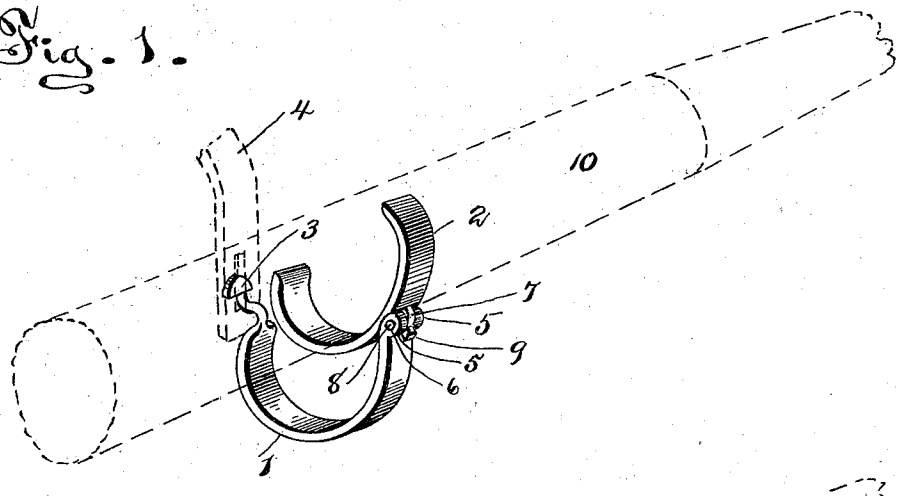

Fig. 2.

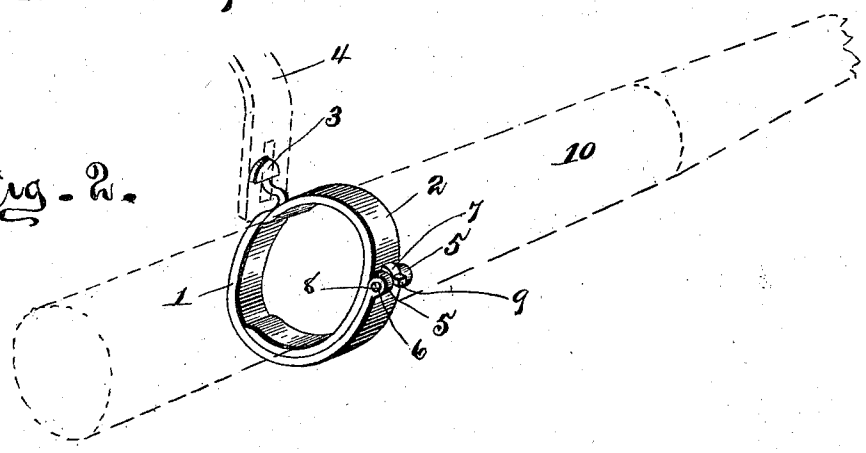

WITNESSES

Marcus L. Byng.

W. A. Mason.

INVENTOR,

Archibald M. Tippit,

by John Wedderburn.

Attorney

THE NORRIS PETERS CO., PHOTO-LITHO., WASHINGTON, D. C.

UNITED STATES PATENT OFFICE.

ARCHIBALD M. TIPPIT, OF NIANTIC, ILLINOIS, ASSIGNOR TO WILLIAM C. JONES, SMITH H. BROCK, AND JAMES I. FORD, OF SAME PLACE.

SHAFT-SUPPORT.

SPECIFICATION forming part of Letters Patent No. 590,174, dated September 14, 1897.

Application filed August 7, 1896. Serial No. 602,040. (No model.)

To all whom it may concern:

Be it known that I, ARCHIBALD M. TIPPIT, a citizen of the United States, residing at Niantic, in the county of Macon and State of Illinois, have invented certain new and useful Improvements in Shaft-Supports; and I do hereby declare the following to be a full, clear, and exact description of the invention, such as will enable others skilled in the art to which it appertains to make and use the same.

My invention relates to harness, the object of the same being to provide a shaft-support to be connected through a supplemental strap to the saddle or back-band of the harness, said support consisting of two metallic portions, generally circular in form, each cut away at one point, one of said parts being slightly larger than the other and having ears formed in its outer end, forming a part of a hinge, and the other part having a lug formed upon its outside adjacent to its middle, said lug adapted to fit between said ears and to be pivotally connected thereto by means of a rod or shaft passing through it and said ears. The invention also consists in other details of construction and combination of parts, which will be hereinafter more fully described and claimed.

In the drawings forming part of this specification, Figure 1 represents a perspective view of my device, the two parts thereof being shown in open position, with a shaft fitting within them. Fig. 2 is a similar view showing the two parts of my device in their closed positions.

Like reference-numerals indicate like parts in both views.

As is well known, the shafts of a buggy or other vehicle are supported ordinarily by means of leather shaft-loops upon the lower ends of straps leading downwardly along the sides of the horse from the saddle or back-band of the harness. In inserting the shafts it is necessary to force these loops forwardly, pass them over the ends of the shaft, and then withdraw them to their proper positions.

By my invention the horse, having the harness upon him, is adapted to be backed into the shafts and said shafts afterward simply lowered into place into the shaft-support.

My support is made up of two curved metallic pieces 1 and 2, respectively, the part 1 having a buckle or eye-hook 3 at one end thereof, by means of which it may be attached to one of the side straps 4. Its shape in cross-section is generally circular, being cut away on its upper side, so that it describes substantially about three-quarters of a circle. The outer end thereof has formed upon it parallel oppositely-disposed ears 5 5, which have alined openings 6 6 through them. The other part 2 of my device is of substantially the same shape as the part 1, and when in its closed position is adapted to fit within the part 1 and be held in place by frictional engagement therewith. An ear 7 is formed upon the outside of the part 2, at a point adjacent to the middle thereof, the said lug being adapted to fit between the ears 5 5 on the part 1 and be pivotally held in place thereon by means of a pin or rod 8, passing through said ears and said lug.

A stop or dog 9 is formed upon the lug 7, which is adapted to engage the side of the part 1 to prevent the part 2 from opening too far and falling down upon the outside of the part 1.

In using my device the two parts are thrown into the position in which they are shown in Fig. 1 and a shaft 10 is lowered into the part 2, the weight thereof closing the two parts on their pivotal connection with each other, with the part 2 fitting within the part 1. The said shaft when in place is held firmly and prevented from falling or from lateral displacement.

While I have described my invention as being especially adapted to be used as a shaft-support, I also propose to use it as an overcheck-rein on top of the back-band and as a neck-yoke support. For these uses the construction thereof will not be materially changed, but it will be attached to different parts of the harness.

Having now described my invention, what I claim as new, and desire to secure by Letters Patent, is—

The herein-described shaft-support, made up of two imperforate parts, one of which is generally circular in cross-section, is cut away at one point, and has an eye-hook formed integral with one end thereof by means of

which it may be attached to a strap leading from the saddle or back-band of the harness, and has parallel oppositely-disposed ears upon its outer end, and the second metallic part being of substantially the same shape, having a lug formed upon the outside thereof at a point intermediate of its ends adapted to fit between said ears, and a pin or rod passing through said ears and said lug forming a pivotal connection between said parts, the lower end of said second part being adapted to rest upon the upper surface of the first part when the shaft is in place, and both parts when in their closed positions describing a circle and completely embracing said shaft, substantially as and for the purpose described.

In testimony whereof I have signed this specification in the presence of two subscribing witnesses.

ARCHIBALD M. TIPPIT.

Witnesses:
J. P. FARIS,
W. C. WHALEY.