Nov. 14, 1961 L. E. CARSON 3,008,584

MULTIPLE DISPENSING RACK FOR CIGARETTE PACKAGES

Filed Dec. 16, 1959 4 Sheets-Sheet 1

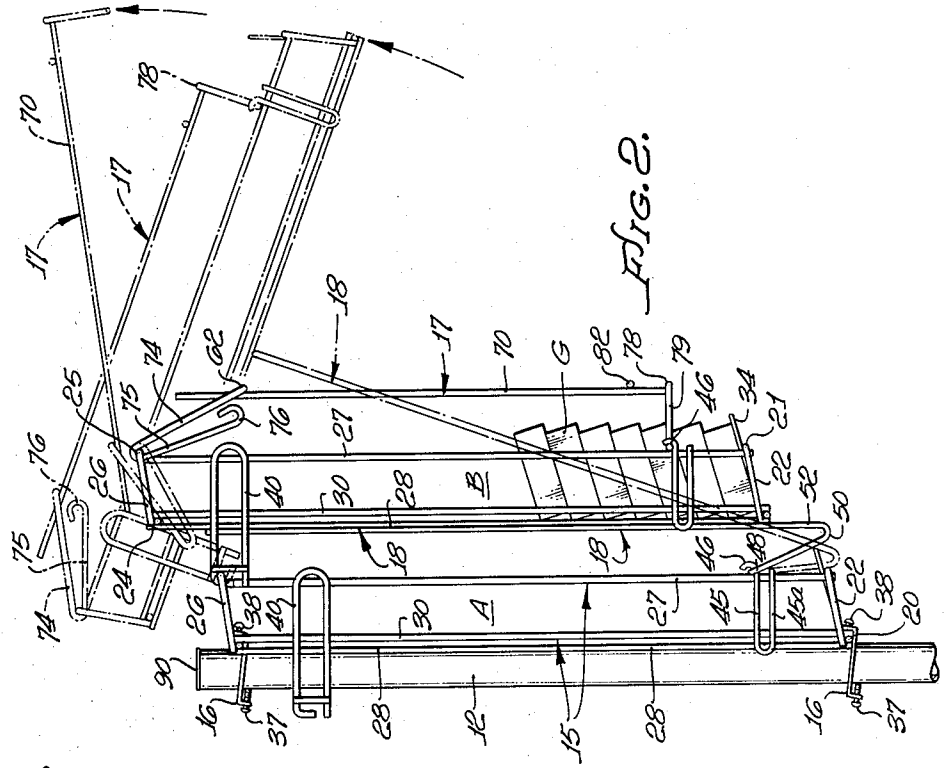

FIG. 2.

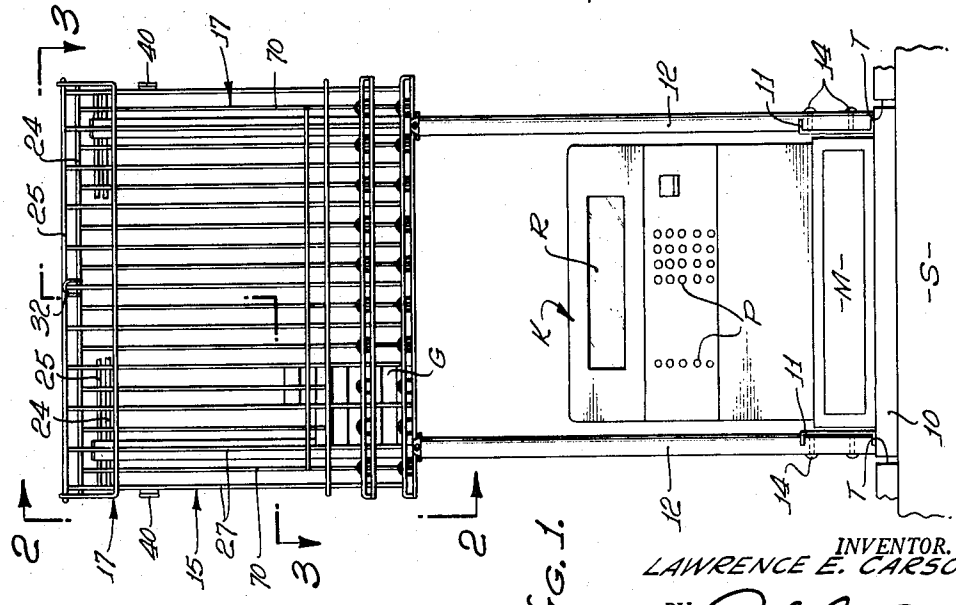

FIG. 1.

INVENTOR.
LAWRENCE E. CARSON
BY Reed L. Lawler
ATTORNEY.

Nov. 14, 1961 L. E. CARSON 3,008,584

MULTIPLE DISPENSING RACK FOR CIGARETTE PACKAGES

Filed Dec. 16, 1959 4 Sheets-Sheet 2

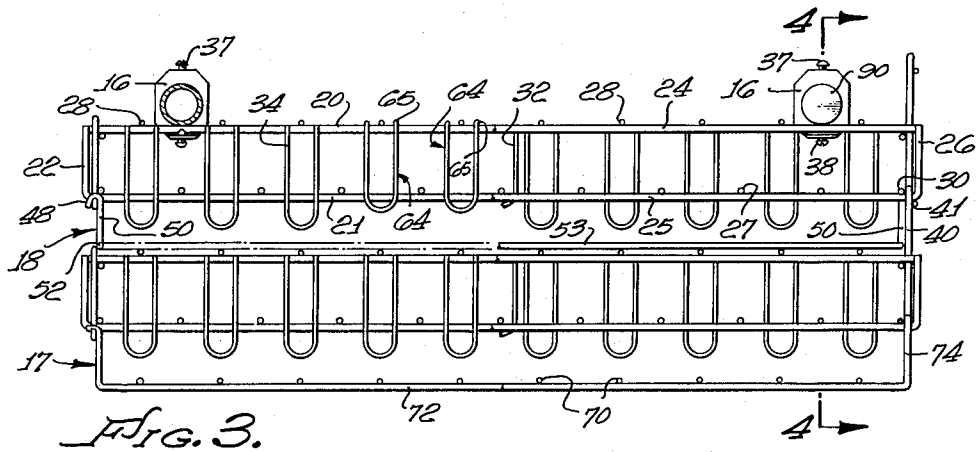

FIG. 3.

FIG. 4.

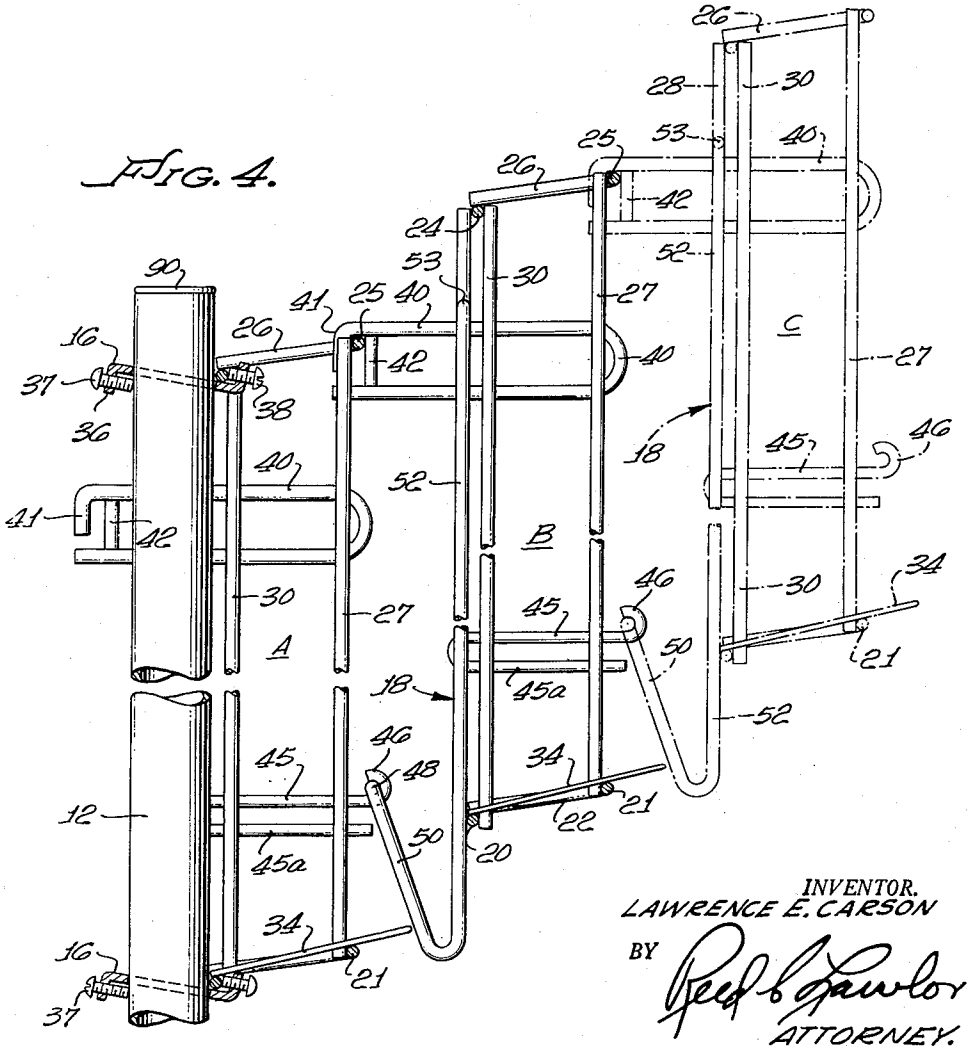

INVENTOR.
LAWRENCE E. CARSON
BY Reed & Lawlor
ATTORNEY.

Nov. 14, 1961 L. E. CARSON 3,008,584

MULTIPLE DISPENSING RACK FOR CIGARETTE PACKAGES

Filed Dec. 16, 1959 4 Sheets-Sheet 3

FIG. 6.

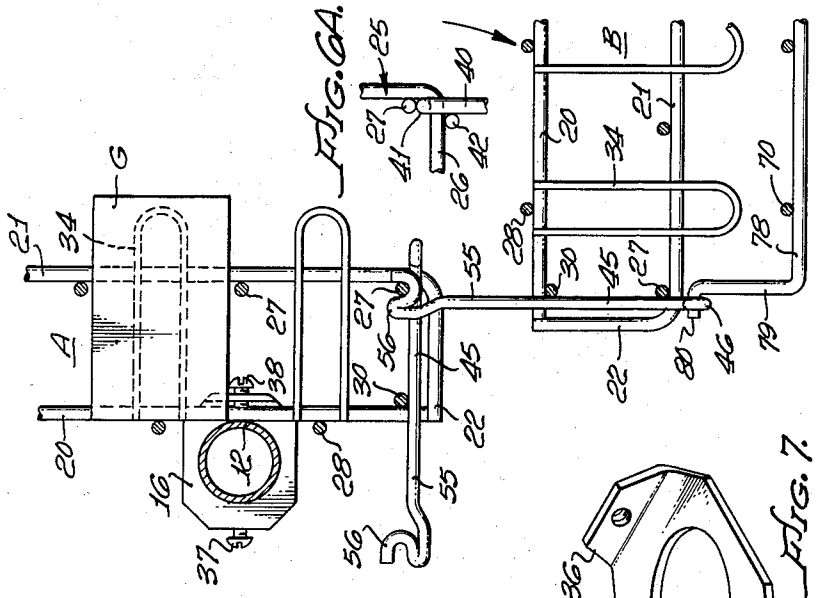

FIG. 6A.

FIG. 7.

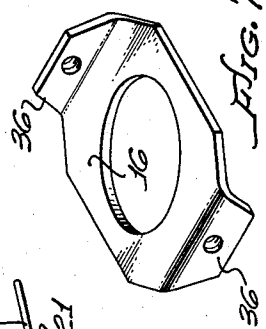

FIG. 5.

INVENTOR.
LAWRENCE E. CARSON
BY Reed L. Lawlor
ATTORNEY.

Nov. 14, 1961 L. E. CARSON 3,008,584

MULTIPLE DISPENSING RACK FOR CIGARETTE PACKAGES

Filed Dec. 16, 1959 4 Sheets-Sheet 4

FIG. 8.

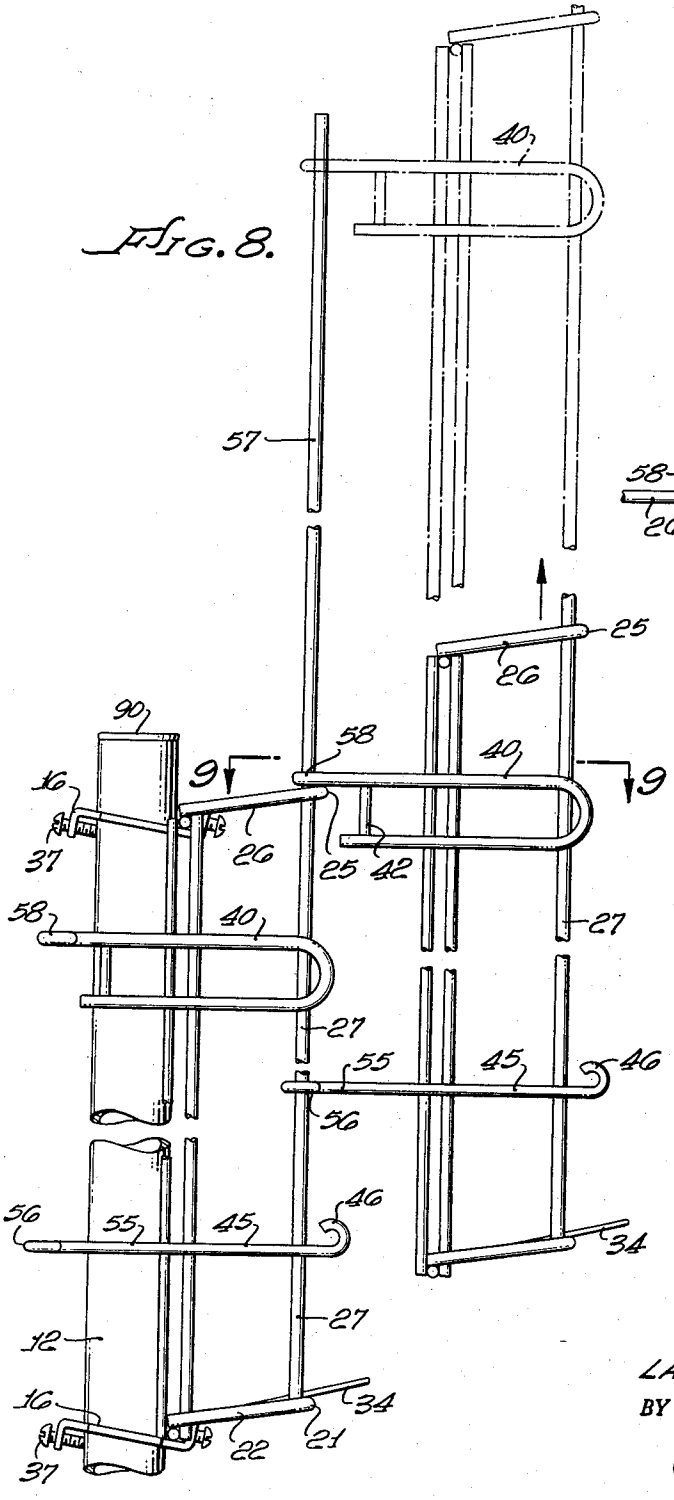

FIG. 9.

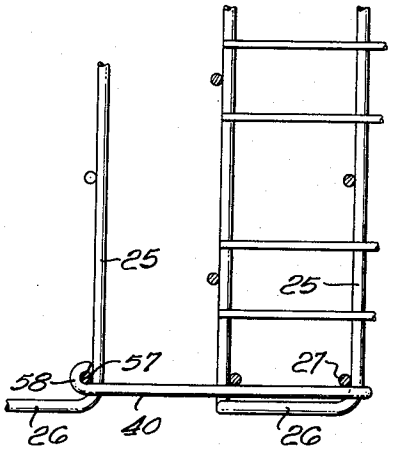

FIG. 10.

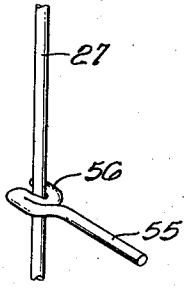

FIG. 11.

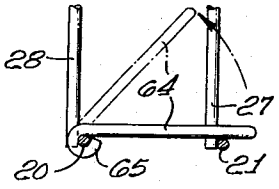

INVENTOR.
LAWRENCE E. CARSON
BY Reed B. Lawler
ATTORNEY.

United States Patent Office 3,008,584 Patented Nov. 14, 1961

3,008,584

MULTIPLE DISPENSING RACK FOR CIGARETTE PACKAGES

Lawrence E. Carson, West Covina, Calif., assignor to Modern Village Stores, Inc., El Monte, Calif., a corporation of California

Filed Dec. 16, 1959, Ser. No. 859,970
19 Claims. (Cl. 211—49)

This invention relates to merchandising racks, and particularly to racks for the display of cigarette packages or similar small packages and from which such packages are withdrawable to serve customers.

It is a common practice, especially in large self-service stores where cashiers are employed to check out goods that are selected and brought to the cashiers' stations by customers, to display a large number of brands of cigarettes at such cashiers' stations. Since it is common to have thirty to fifty brands of cigarettes, it has become awkward to make a satisfactory and ample display within the cashiers' reach.

It is, therefore, an important object of the present invention to provide a rack arrangement for the display and dispensing of a great variety of cigarette packages in a position closely adjacent to a cashier's station in stores of self-service and other types.

Also, as is frequently true, space at a cashier's station for the display of goods is at a premium. Yet it is not desired to place many types of small goods, such as cigarettes, candy bars and the like, on the general merchandise shelves in the store, but it is deemed preferable to locate them within reach of the cashier.

Therefore, it is another object of the invention to provide rack structures for cigarettes and other small goods which enable utilization of the space immediately above cash registers and within easy reach of the attendants, with particular attention to the matter of so locating a considerable variety of cigarette brands and permitting ready increase in the number of displayed brands in accordance with the practices and desires of various store managers.

An incidental object consequently is to present to store operators a type of cigarette rack which may be mounted in tandem or other plural assemblage as may be desired, each of which racks may be easily re-filled by the attendant whenever required.

Another object is to provide in such a rack structure open front columns to receive replenishing packages at any position throughout the height of each column.

A further object is to provide, as through the medium of a forward rack or an outer frame, guard means to avoid dislodgment of stacked packages, especially during withdrawal of a bottom package.

A still further object is to provide for readily assembling and mounting racks of the indicated character on supports at a cash register location and above a cash register whereby, in a quickly demountable assembly, a rack for stacks of cigarette packages or the like and a pair of standards with suitable clamps serve in themselves to stabilize the assembly against lateral twisting or shifting and to maintain a rigid arrangement.

An additional object of the invention is to conserve space in the construction of modern check stands by mounting the mentioned rack-carrying standards on a small platform, placing the platform at the cash register station, and mounting the cash register on such small platform.

In general, these objects are attained by means of a plurality of identical wire or rod racks providing cross rods for mounting on two upright standards by appropriate clamps, each rack having horizontal hook-type arms to engage parts of a rearward rack for removable

suspension and positioning of a forward rack on a rearward rack, including means acting to space a forward rack properly from a rearward rack.

Other objects of the invention, as well as specific features thereof, will become apparent to those skilled in this art upon reference to the following specifications and the accompanying drawings wherein certain embodiments are illustrated.

In the drawings:

FIGURE 1 is a front elevation of a cigarette rack assembly shown as mounted on standards at the cash register of a typical check stand in a self-service market;

FIG. 2 is a side elevation on an enlarged scale taken approximately from the line 2—2 of FIG. 1 and showing two assembled racks of this improvement, with a front guard and an interposed bracing frame, in operative position in full lines, the outer rack, together with the guard and bracing frame, being shown in elevated or servicing positions in broken lines;

FIG. 3 is partially a top plan view and partially an intermediate horizontal section taken on the irregular line 3—3 of FIG. 1;

FIG. 4 is a vertical transverse section, taken approximately on the line 4—4 of FIG. 3, showing on a much larger scale than that of FIGS. 2 and 3 the two assembled racks of FIG. 2 in full lines, together with a broken line representation of a possible extension of the assembly in the form of a third rack, intermediate vertical portions being broken away;

FIG. 5 is a view similar to that of FIG. 4 showing also the outer or forward guard frame illustrated in FIG. 2 but omitted in FIG. 4, and further showing a modified construction for spacing and hinging the forward rack for swinging it open in a horizontal plane rather than vertically as in FIG. 2;

FIG. 6 is a fragmentary horizontal section taken on the line 6—6 of FIG. 5 but showing the forward rack swung horizontally open to expose the rearward rack, the direction of swing being indicated by the curved arrow;

FIG. 6A is a fragmentary plan view taken from the line 6A—6A of FIG. 5 and showing the upper hinge arrangement corresponding with the lower hinge arrangement seen in FIG. 6;

FIG. 7 is a perspective view of one of the clamp rings employed to mount the rearward rack on the supporting standards;

FIG. 8 is a side elevational view of a further modification showing a rearward rack and a forward rack which is vertically slidable on the rearward rack to an elevated position as indicated in broken lines to expose packages in the rearward rack;

FIG. 9 is a fragmentary horizontal section on the line 9—9 of FIG. 8 showing the top connection of the racks;

FIG. 10 is a fragmentary perspective showing the bottom connection of the racks of FIGS. 8 and 9; and

FIG. 11 is a fragmentary detail of a variation in bottom-forming construction.

Referring first to the elevational view of FIG. 1, the two-unit dispensing structure of FIG. 2 is shown in elevation as it is mounted at the cashier's station of any typical checkstand S in a self-service market. Characteristically, on such a checkstand, a minimum amount of space T is provided for the usual cash register K, and as a consequence, at such a checkstand, no surface space is available for the display or storage of goods. Therefore, in the present instance, a rectangular base or platform 10 is provided to fit in the cash register space T and serve to support thereon the cash register K which is of any conventional type such as one having the usual recording push-buttons P, a register reading window R ad a money drawer M which opens toward the front of the base 10 and toward the cashier's station. The edges

of the base 10 are provided with appropriately secured channeled brackets 11 to which tubular standards 12, upstanding adjacent the back of the base 10, are secured as by means of bolts or machine screws 14, the flanges of the channel brackets 11 being notched to receive the lower end portions of the standards 12.

At the upper ends of the standards 12 there is located an assemblage of two or more racks 15 of substantially identical nature, all of which face toward the cashier's station. As best seen in FIGS. 2 and 4, there is a rearward rack A and a forward rack B which is mounted upon the rack A at a slightly higher elevation. If desired, another rack C may be mounted upon the rack B as indicated in broken lines in FIG. 4, this being indicative also of the possibility of mounting even another rack on the rack C. The rearward rack A is mounted on the upper portions of the standards 12 by means of four clamp rings 16 shown in operative position in several of the figures and shown separately in perspective in FIG. 7; the relationship of these clamp rings is more fully described hereinafter.

On the front of the forward rack at its top, there is removably hung a guard frame 17 to insure retention of packages stacked in the upper portion of such forward rack. At the bottom of each rearward rack, there is removably mounted a tipping, spacing and bracing frame 18 which spaces the racks A and B as seen in full lines in FIGS. 2 and 4 and props or braces the forward rack B in elevated servicing position as seen in broken lines in FIG. 2.

The racks 15 and the frames 17 and 18 are desirably produced from steel rods which inherently possess some resilience.

Each of the main rack structures 15, as represented by the rack units A, B and C of FIGS. 2 and 4, in addition to means for mounting it, is provided with a plurality of vertical columns for displaying a corresponding number of stacks of small packages typified by cigarette packages as indicated at G in the rack unit B of FIG. 2. In practice, there are commonly ten of these columns and each column accommodates a stack equal to about twenty packages of cigarettes or two typical cartons, and the columns are arranged so that they will handle either standard size packages or the longer well-known so-called king-size packages. Thus, if the three indicated units A, B, and C are assembled as indicated in FIG. 4, there are readily provided above the cash register K at the cashier's station thirty stacks of cigarette packages which may represent thirty different brands where each column is used for a single brand.

Each main rack section 15, as probably best represented in FIGS. 2 and 4, includes a rearward transverse bottom rod 20, a forward transverse bottom rod 21 having rearwardly bent ends 22 rigidly welded to the extremities of the rearward rod 20. Each rack section also includes an upper transverse rearward rod 24 and an upper transverse forward rod 25 having end portions 26 rearwardly bent and welded to the extremities of the rearward top rod 24. Extending vertically between the bottom forward rod 21 and the top forward rod 25 is a plurality of spaced rod members 27 which act to define the indicated ten columns for receiving stacks of cigarette packages, the ends of these rods 27 being welded to the forward transverse rods 21 and 25. At the back of each main rack section 15 there is a plurality of spaced vertical rod members 28 welded at their ends to the rearward transverse lower and upper rods 20 and 24, these rearward vertical rod members 28 being staggered with respect to the forward vertical rod members 27 to provide obstructions at the backs of the columns for the stacks of packages to retain the latter in stacked relationship. In the particular form illustrated, the forward vertical rod members 27 at the ends of each rack section 15 constitute corner rods of the resultant frame or rack, while at the rear of the rack section 15 corner rods 30 are provided at the ends of the rearward transverse rods 20 and 24 and are welded to the forward sides of such transverse rods 20 and 24 out of line with the rearward rod members 28 which are welded to the rearward sides of the transverse rods 20 and 24. With this arrangement, a very rigid framework is provided for each main rack section 15, because the described rods and rod members are of stiff, steel rod material which would bend significantly only with much greater applied force than is encountered in the use of these racks. In practice, stronger and stiffer rod material is manually employed for the bottom transverse rods 20 and 21, the top transverse rods 24 and 25 and the corner rod members 27 and 30, than for the intermediate rod members 27 and 28 which may be somewhat lighter as generally represented in the drawings. In practice, a bracing link 32 is commonly used to span the middle portion of the two top transverse rods 24 and 25, this bracing link desirably being U-shaped as shown in FIG. 1. Secured to the bottom transverse rods 20 and 21, U-shaped links 34 are provided between the vertical rod members 27 and approximately in line with the respective rearward vertical rod members 28 to provide bottom supports for the stacks of packages disposed in the columns. The forward looped ends of the links 34 extend beyond the front transverse rods 21 and 25, approximately as seen in FIG. 2 for example, so that they support the forward portions of either standard sized or king-sized packages.

These bottom-forming link or loop members 34 further rigidify each main rack section 15.

Where a rack 15 is to be mounted upon standards 12 by the ring clamps 16, the mounting is accomplished by engaging the tansverse rearward bottom rod 20 with two lower ring clamps 16, and engaging the top transverse rearward bottom rod 24 with two upper ring clamps 16 on the upper parts of the standards 12. Each ring clamp 16 is somewhat elongated and is provided at its opposite ends with oppositely turned flanges 36, each flange 36 having a binding screw 37 or 38. The screw 37 may be somewhat longer than the screw 38 and will be used to bind the ring clamp 16 against its standard 12 in canted relation as illustrated. Each screw 38, which is used to bind the cross rod 20 or 24 against the standard 12, may be somewhat shorter than the screw 37 as illustrated in FIGS. 4, 5 and 6, for example. Also, each screw 38, instead of being square cut as shown in most instances, may have a conical end as shown at the top of FIG. 5 for positive engagement around a side portion of the respective rod to insure better retention. While each screw 37 may be square cut and produce adequate binding action against a standard 12, it also may be conical ended, as seen at the top of FIG. 5. The lower ring clamps 16 are set so that the flanges carrying the set screws 38 are turned up to provide a positive rest for the cross rod 20, but the upper clamps 16 may be set to turn the flanges in either direction as preferred, and as shown respectively in FIGS. 2 and 5.

For the purpose of mounting a forward rack B upon a rearward rack A, a looped mounting arm 40 is welded in horizontal position to the corner rods 27 and 30 at each end of each rack structure 15, and the rearward portion of the upper member of each looped arm 40 is provided with a downturned hook means 41 for engaging over an end portion of the top forward transverse bar 25 of the rack 15 immediately behind in the form of FIGS. 1 to 6. This hook 41 constitutes a hinging construction either for swinging a rack structure 15 upward as indicated in FIG. 2 or for swinging it horizontally as indicated in FIGS. 6 and 6A. In either instance, either hook member 41 will work in the bend at the juncture between the respective end of the forward upper rod 25 and its rearwardly bent end portion 26, whereby to provide for the desired hinging action.

The downturned end of each hook 41 is spaced from

the rearward extremity of the lower member of the looped arm 40 a distance to provide for passage of the forward rod 25 through the resultant opening for the purpose of mounting a forward rack structure 15 upon the transverse rod 25 of a rearward rack structure 15. A vertical stop bar 42 is spaced inward from each hook member 41 a distance adequate to permit free movement of the rod 25 in the space thus enclosed and yet permit only very limited movement of the arm 40 on the bar 25 either when a forward rack structure 15 is being raised to the broken line position of FIG. 2 or when it is being swung horizontally to the position represented by FIGS. 6 and 6A.

The rearward portion of each looped mounting arm 40 extends behind the respective rack structure 15, to the extent of about half the length of the looped arm 40, and thereby acts to space the forward rack correspondingly in front of the rearward rack. Means are therefore employed adjacent the lower end portions of the forward and rearward racks to space such lower end portions to correspond with the mentioned upper spacing. In the form of construction shown in FIGS. 1 to 4, this lower spacing is effected through the medium of the previously mentioned spacing and bracing frame 18 which is swingingly and detachably mounted upon connection means 45 welded at each end of each rack structure 15 to lower portions of the corresponding vertical corner members 27 and 30. This connection means 45 is primarily in the form of a horizontal rearwardly extending rod whose forward end is curved into the form of an upstanding hook 46 spaced sufficiently forward from the corner vertical member 27 to provide an entrance passage for the insertion of a similar hook-shaped member 48 at the corresponding extremity of a lower spacing arm 50 provided at each end of the frame 18 seen in FIGS. 2, 3 and 4. When in normal spacing position as seen in these figures, the arms 50 extend angularly downward and join integrally with the extreme lower ends of the main bracing arms 52 of the bracing frame 18, the upper ends of these arms 52 being integrally connected by a cross rod member 53. When a forward rack structure 15 is lowered into its normal or operative position as seen in full lines in FIG. 2 and as seen in FIG. 4, the bracing frame is folded in between the forward rack and the rearward rack so that the arms 50 serve as spacing means for the lower portions of the racks. When an outer rack is raised to servicing position as seen in broken lines in FIG. 2, the bracing frame 18 drops outward to the broken line position of FIG. 2 where the bottoms of the spacing arms 50 bear against the lower forward cross rod 21 which acts as a stop, thus positioning the cross bar member 53, at the top of the bracing frame 18 under the elevated rack B. When the vertical columns of the rearward rack A have been filled, the bracing frame 18 is manually pushed back from the broken line position in FIG. 2 to the full line position, thereof, and the elevated rack B is lowered to the full line position. It is to be noted that when the bracing frame 18 is in the bracing position shown in broken lines, so that the bottom portions of the angular spacing arms 50 bear against the lower forward cross rod 21, the forward portions of the respective hook members 46 of the connecting members 45 retain the hook members 48 of the upper ends of the arms 50 in operative position. When a bracing frame 18 is in the spacing position shown in full lines FIGS. 2 and 4, the upright corner rods 27 act as stops for the hook members 48 when the forward rack B, in its position, bears against the lower portions of the vertical arms 52. It is pointed out that the hooks 46 on the forward ends of the connecting members 45 are adapted to perform dual functions; thus, the hooks 46 serve to mount a bracing frame 18 by means of the hooks 48 on the inclined arms 50, and also the hooks 46 serve to mount or position the lower end portions of a guard frame 17, as more fully described hereinafter.

With respect to each transverse connecting arm means 45*a* may or may not be employed in the form of FIGS. 1 to 4, and where employed it further braces the lower portion of each rack structure 15, and in the form shown in these figures, it is integrally connected by a rearward loop formation with the upper member 45. However, in constructions such as shown in FIGS. 5 to 10, the member 45*a* is not employed and, instead, the rearward portion of each connecting arm means 45 is extended rearward in the form of a positioning and spacing arm 55 for a distance corresponding with the rearward extension of the upper looped mounting 40. As shown especially in FIG. 6, and as also seen in FIG. 10, the rearward extremity of each spacing arm 55 is provided with a reversely bent half eye or hook 56 positioned to engage around the respective vertical corner rod 27 of a rearward rack at a position above the connecting arm means 45 of such rearward rack.

The spacing arrangement shown in FIGS. 5 and 6 provides for horizontal swinging of a forward rack B with respect to a rearward rack A, as best indicated in FIGS. 6 and 6A. Thus, when it is desired to fill the columns of a rearward rack A, the hook 41 of the forward rack at one side (the far side in FIG. 6) may be lifted and disengaged from the cross bar 25 of the rearward rack. Thereupon, the forward rack may be swung in the direction of the arrow of FIG. 6 to expose the rearward rack, the hook 41 at the other side (near side) of the forward rack hinging around the bend connecting the cross rod 25 with its corresponding rearward extension 26 as seen in FIG. 6A. At the same time, the corresponding reverse hook 56 on the corresponding bracing arm 55 pivots around the respective vertical corner rod 27. This arrangement provides for a nice hinging or swinging action by a forward rack B to expose columns of rearward rack A, while at the same time providing for removal or installation of a forward rack B with respect to a rearward rack A.

A further modified form is illustrated in FIGS. 8, 9, 10. With this construction a forward rack is adapted to be vertically raised with respect to a rearward rack to expose columns of the rearward rack for filling with packages. For this purpose the forward corner vertical rods 27, which are adequately heavy and strong for the purpose, are extended upwardly above the top forward cross rod 25, and its rearwardly extended end members 26, a distance approximating the legnth of the respective corner rod 27, such extended portion being indicated at 57. With this arrangement, the same connecting arm member 45 and rearward extension 55 with its reversely bent half-eve or hook 56 is employed in each instance as with the construction of FIGS. 5 and 6; and the same looped mounting arms 40 are used at the tops of the racks, but with the difference that the hooks 41 of the other form are replaced by eyes or hooks 58 which engaged around the rod extension 57 in horizontal planes. Thus, the reverse hooks 56 on spacing arms 55 and hooks 58 on the loop mounting arms 40 provide for sliding a forward rack from the full line position of FIG. 8 upward in the direction of the arrow to the broken line position of FIG. 8 to expose the columns of the rearward rack, such hooks 56 and 58 providing also for mounting and demounting a forward rack from a rearward rack.

In order to make it possible to fill one or more columns or all columns from the bottom of a rack; such columns, or all of the columns of all racks, may have their bottom-forming U-shaped links 34, which are secured to the bottom transverse rods 20 and 21, replaced by movable bottom forming links 64 such as illustrated in FIGURE 11, and indicated also in FIGURE 3 at positions adjacent the middle of the rearward rack. For this purpose, each U-shaped link 64 is provided with hinging eyes 65 engaged around the rearward bottom transverse rod 20 at positions on opposite sides of the respective rearward vertical rod members 28 which, as previously

indicated, act to obstruct the backs of the respective columns in order to retain cigarette or other packages stacked therein. With this arrangement, the hinged bottom-forming loops 64 are limited in a possible lateral sliding movement by the rearward vertical rod members 28, and at the same time such loops 64 may be swung upward from the full line position of FIGURE 11 to the broken line position of FIGURE 11, since the eyes 65 hinge such bottom forming loops 64 upon the rod 20. In this manner, small packages may be forced upward from the bottom of the respective rack to raise a bottom-forming loop 64 far enough for the packages to pass above loop 64 and permit the latter to drop back down into the full line position and again support the elevated stack which now settles down onto the respective loop 64. To limit the upward vertical movement necessary to introduce cigarette packages in this manner, the forward projection of the bottom-forming loops 64 may be reduced appreciably from that of the stationary bottom forming loops 34, such shortened configuration being particularly indicated at the mentioned locations in FIG. 3. When constructing the bottoms of all columns with the swinging bottom forming loop 64 of FIGURE 11, forward racks do not need to be moved to such positions as indicated in broken lines in FIGS. 2 and 8 or to such positions as indicated in FIG. 6. Under these circumstances, however, for mounting forward racks on rearward racks, the horizontally disposed rearwardly extending looped mounting arms 40 serve their usual purposes of building up or "adding on" as many racks 15 in an assembly as may be required, or reducing the number of racks in such an assembly as desired. With such arrangement, the lower end of each forward rack may conveniently be spaced forward from the lower end of each rearward rack by the bracing arm construction 55 illustrated in FIGS. 5 and 8, thereby omitting the bracing frames 18 of FIG. 2 and FIG. 4.

In all of the above described forms of rack combinations and arrangements, the forward guard frame 17 previously mentioned is employed on the forwardmost rack 15 of any assembly for the purpose of retaining packages stacked in the columns of such forward rack, and thereby performs the function which is performed for any rearward rack by that rack which is immediately in front of it.

Each guard frame 17, for this purpose, is made up of a plurality of vertical retention rods 70, each of which is disposed opposite the middle of a corresponding column in the rack 15 immediately behind it, whereby to prevent forward dislodgment of cigarette packages in such columns in substantially the same manner that a rearward vertical rod 28 of any forward rack obstructs the fronts of columns in a rearward rack. The upper portions of the vertical rods 70 of the guard frame 17 are welded to a horizontal cross supporting rod 72 which has its ends bent rearward and formed into elongated mounting arms or loops 74, each of which includes a reversely bent lower arm 75 to retain the guard frame 17 in position, the forwardly directed extremity of each arm 75 having a stop hook 76 to limit the rearward movement of the frame 17 when in an elevated position illustrated in broken lines in FIG. 2, as presently to be more fully described.

The lower ends of the vertical retention rods 70 of the guard frame 17 are welded to a lower cross rod 78 located somewhat above the bottom of the rack 15 upon which the guard frame 17 is mounted, whereby to provide space for access to two or three bottom packages in the stacks. The opposite ends of the cross rod 78 are reversely bent to provide end members 79, and rearward extremities such end members 79 are provided with laterally directed hook members 80 adapted to engage in the upturned hooks 46 at the forward ends of the rearwardly extending connecting arm means 45 on the lower portion of the rack 15 immediately behind the guard frame 17 and on which rack the guard frame 17 is movably and removably mounted. Each hook 80, as probably best indicated in FIG. 5 and FIG. 6, bears against the adjacent vertical corner rod 27 which acts to stop rearward movement of the hook 80 and the lower portion of the guard frame 17 in substantially the same manner as described in connection with the action of the hooks 48 of the lower ends of the bracing frame 18, with respect to the positioning hooks 46. In addition to the cross rod 78 carrying rearwardly bent ends 79 and hooks 80, the lower portions of the vertical retention rods 70 may also have welded thereto a higher cross rod 82 to cooperate with the lower cross rod 78 for the carrying of appropriate advertising strips or labels to advertise or identify the respective goods. The narrow spacing of the rods 78 and 82 as illustrated is appropriate for such purposes.

Referring to the rearwardly directed mounting arm loops 74 of the guard frame cross rod 72, which is welded to the upper ends of the retention rods 70, such disposition of loops 74 desirably is at an acute angle as shown with respect to the upper portions of the rods 70 and with respect to a rack 15 upon which the guard frame 17 is hung. The hook 76 on each reversely bent arm 75 is spaced sufficiently from the principal or upper arm member 74 of this mounting loop to provide for snug passage of the hook 76 over the respective upper transverse cross rod 25 at the front of the rack 15 upon which the guard frame 17 is being mounted. Desirably the spacing of the hooks 76 from the members 74 is a trifle less than the diameter of the forward transverse rod 25 so that the hooks 76 spring over such rod 25 at the bend connecting it to its rearwardly directed end members 26, during installation.

The hooks 76 of guard frame 17 having been snapped over the top forward transverse rod 25, the frame 17 may be lowered to its guard position as shown in full lines in FIG. 2 and in FIG. 5. In this position the frame 17 is suspended from the upper forward transverse rod 25 of the respective rack 15, the support occurring at the bights at the rearward ends of the described looped arms 74 where the arms 75 are bent forward. Upon then snapping the hooks 80 of the bottom cross rod 78 into the hooks 46 of the connecting means 45 at the bottom of the respective rack 15, the guard frame 17 is disposed and locked or latched in operative position.

In order to elevate the guard frame 17 of FIG. 5 for filling the columns of the respective rack 15 with cigarette packages, the hooks 80 are detached from the hooks 46, and the lower end of the guard frame 17 is raised to the uppermost broken line position corresponding to that illustrated in FIG. 2. The looped arm members 74 have lengths somewhat greater than the front-to-back depth of each rack 15. As a result, when the guard frame 17 is raised to the indicated position, it may now be slid rearward along the end portions of the transverse top rod 25 of the rack 15 until the rearward ends of the looped members 74 engage under the rearward top transverse rod 24 of the respective rack 15. Such rearward movement is limited by the hooks 76 on the ends of the arms 75, which hooks readily receive the forward transverse rod 25, especially because the gap between each hook 76 and the adjacent portions 74 is somewhat less, as previously indicated, than the diameter of the rod 25. In this position, rearward ends of the looped arms 74 are braced under the rearward transverse rod 24, so that the guard frame 17 is braced in its uppermost broken-line position of FIG. 2. When the columns of the respective rack 15 have been filled, the guard frame 17 is readily returned to guarding position by drawing it forward until the forward transverse rod 25 is received in the bights of the loops of the members 74, whereupon frame 17 is lowered and latched in the full line position illustrated. Necessary springing of the parts to and from positions as indicated is provided by the resilience

inherent in the steel rods of which the parts are formed.

From the foregoing it will be apparent that I have provided a rack structure wherein a series of racks of indentical construction may be assembled by hanging a forward rack upon a rearward rack to extend the assembled series as far forward as required in an "add-on" relation. Such assembly is accomplished by hooking one rack over the top of a rearward rack thorugh the medium of the described looped supporting arms **40** disposed somewhat below the tops of the respective racks at a distance such as to space the bottom of each forward rack somewhat above the bottom of each rearward rack, whereby to expose two or three cigarette packages in each column of such rearward rack. This relative arrangement exists throughout the series, whether there be an assembly of only two racks or an assembly of several racks. It is also apparent that I have provided for the guarding of stacks of cigarette packages or other small packages in the various columns so that they may not tip forward and become dislodged from their stacked position. This is accomplished through the medium of the guard frame **17** on the forwardmost rack, and by forward racks themselves with respect to stacks of packages in racks immediately behind.

Thus racks may be readily added to rearward racks to any extent desired, and may be readily removed. Similarly, forward racks may be readily moved or opened in each of the forms illustrated, to expose the columns of rearward racks for filling with packages, or, as described and shown especially in FIG. 11, packages may if desired be passed upward into the bottoms of the columns. Also, it will be apparent that I have provided adequate means for properly spacing the lower ends of assembled racks with respect to each other, whether that be in the form of the bracing frame **18** illustrated in FIGS. 2 and 4, or the spacing arm means **55** illustrated in FIGS. 5 and 8.

It is also to be noted that the employment of the two upright standards **12** with the four ring clamps **16** for anchoring the rearmost rack structure A, where such means employs clamping screws **37** and **38**, provides a very rigid structure wherein, by reason of the four clamps **16**, weaving of the assembly on the standards **12** and their base **10** is effectually prevented. This is important because the assembly of racks is usually disposed in an elevated position above a cash register, the racks all facing toward the cashier's station in front of the register and readily accessible to the cashier. It will be noted further that the standards **12** have been indicated as being tubular. Their upper ends are therefore desirably closed by interfitting caps indicated at **90** in various figures.

It is to be appreciated that variations of the generic invention will become apparent to those skilled in this art, and it is therefore intended that such forms fall within the protection of the patent.

I claim:

1. A merchandising structure including:

a plurality of similar vertical racks, each rack providing a plurality of vertical columns to receive stacks of small packages, the columns being open at their fronts to receive and to present packages to view and obstructed at their backs and sides to retain stacked packages;

rearwardly directed arm means near the top of each rack to removably engage a top portion of a rearward rack for supporting a forward rack from a rearward rack;

and means provided at the back of each rack for mounting the rack on a support, whereby the combined weight of the assembled plurality of racks is transferred to such support through the rearward rack.

2. A structure as in claim 1 wherein each rack carries means for spacing it from an adjacent rack.

3. A structure as in claim 1 wherein said arm means constitute hinging means hingedly mounting a forward rack on a rearward rack for swinging such forward rack to expose the columns of a rearward rack.

4. A structure as in claim 1 wherein said racks are of generally equal height and said arm means on each rack and the top portion of each rack engageable by such arm means are vertically spaced with relation to one another for elevating each forward rack with respect to a contiguous rearward rack to expose packages for withdrawal at the bottoms of the columns of each rearward rack.

5. A structure as in claim 3 wherein the hinging arms means of each forward rack is positioned somewhat below the top of such forward rack and the lower end of such forward rack is positioned above the lower end of the rack rearward thereof and exposes the lower portions of the columns of such rearward rack for access to packages in such lower portions of said columns of the rearward rack.

6. A structure as in claim 1, including an openwork guard having hinge means mounting said guard at the front of the foremost rack to retain packages stacked in its columns and also present them to view.

7. A structure as in claim 6 wherein said guard hinge means includes a sliding loop member slidable under an upper back portion of said foremost rack to act as a latch to hold said guard elevated on said foremost rack.

8. In combination in a merchandise dispensing structure:

a plurality of similar vertical racks of approximately equal height, each rack having a pair of horizontal top rods, one rod being a rearward rod for attachment to a support for the rack, and the other rod being a front rod to be engaged by a mounting arm of a forward rack,

each rack also having a rearward horizontal bottom rod for engagement with a support and having a forward horizontal bottom rod,

generally horizontal bottom-forming means spanning said bottom rods of each rack to support small packages in stacks,

forward vertical rod members connecting said forward rods, and rearward vertical rod members connecting said rearward rods of each rack, said forward vertical rod members being horizontally spaced to form open front package-receiving columns for said stacks, and said rearward vertical rod members extending up behind said bottom-forming means to obstruct the backs of said columns,

and rearwardly directed transverse mounting arms attached to vertical end rod members of each rack at each end and having hinging means engaging over end portions of the front top rod of the rack and supporting each forward rack from the rack rearward thereof,

said mounting arms being attached below said top rods a distance to raise the lower end of the respective rack above the lower end of a rearward rack to expose for dispensing purposes the bottom portions of the package-receiving columns of such rearward rack.

9. A combination as in claim 8 wherein the lower portion of each rack carries means for spacing such lower portion horizontally from the lower portion of an adjacent rack.

10. A combination as in claim 8 including a swinging guard mounted at the front of the foremost rack to retain packages in such foremost rack.

11. A cigarette dispensing rack including:

a rearward horizontal bottom rod,

a forward horizontal bottom rod,

means rigidly connecting said bottom rods together,

spaced means extending between said bottom rods and forming supports for stacks of cigarette packages;

a rearward horizontal top rod,

a forward horizontal top rod,

means rigidly connecting said top rods together,

rearward vertical rod members connecting said rearward horizontal rods,

forward vertical rod members connecting said forward horizontal rods together, said forward vertical rod members being horizontally spaced to form open front package-receiving columns for said stacks and positioned between said spaced support-forming means to provide sides of said columns, and said rearward vertical rod means being disposed in spaced relation to obstruct the backs of said columns for retention of cigarette packages in said stacks; and

arms attached at each side of said rack to end members of said vertical rod members and extending rearwardly of said rack to engage the forward horizontal top rod of a similar rack, the rearward portion of each such arm having combined hook and hinging means for mounting and hinging upon the top rod of a similar rack.

12. A dispensing rack as in claim 11 wherein said arm means are disposed adjacent the top of the rack, and connection means are attached at each side of the lower portion of the rack to end members of said vertical rod members, and means are carried on said connection means for spacing said rack from another rack connected therewith.

13. A merchandising assembly including:

a pair of relatively movable vertical racks, one rack being arranged forward of the other, each rack providing a plurality of vertical columns to receive stacks of packages, the columns being open at their fronts to receive packages and present them to view and obstructed at their backs and sides to retain stacks of packages, and

rearwardly directed arm means mounted on the forward rack near the top thereof at each end thereof and movably engaging upper portions of the rearward rack for removably mounting the forward rack on the rearward rack,

the rearward rack having means for mounting such rack on standard means for supporting thereon the combined weight of the assembled racks.

14. An assembly as in claim 13 including:

a pair of upright spaced standard members, said means for mounting said rearward rack on said standard means including an upper transverse rod and a lower transverse rod at the back of such rack;

a clamp on each standard member clamping said upper rod to the respective standard member;

and a clamp on each standard member clamping said lower rod to the respective standard member, said clamps, rods and standard members yielding a rigid assembly.

15. An assembly as in claim 13 wherein each rack possesses a main rack section having a height substantially equal to the height of the other rack section, said arm means of the forward rack being located below its top to raise the top of the forward rack above the top of the rearward rack and locate the bottom of the forward rack above the bottom of the rearward rack to expose packages in the rearward rack.

16. An assembly as in claim 13 including removable guard means at the front of the forward rack for obstructing upper portions of the vertical columns of the forward rack to retain packages therein.

17. An assembly as in claim 16 wherein said guard means swings on the top of said forward rack and has its lower portion disposed above the lower portion of said forward rack to expose packages in such lower portion of the forward rack for withdrawal therefrom.

18. In combination:

a portable platform for a cash register, a cash register mounted on said platform, said platform and register having approximately equal areas,

standards upstanding from the back portion of said platform near opposite sides of said cash register,

a drawer in said cash register opening toward the front of said platform and toward a cashier's station in front of said platform;

and a plurality of similar package racks carried by upper portions of said standards in front of one another and including a rearward rack secured to said standards and a forward rack removably mounted on such rearward rack and movable on such rearward rack to expose the front of the rearward rack for access from said cashier's station, such racks being disposed above said cash register.

19. A combination as in claim 18 wherein each rack has a top transverse rearward rod adapted to be clamped to said standards and a forward transverse top rod, each rack having forward and rearward transverse bottom rods, vertical rods connecting said rearward rods, vertical rods connecting said forward rods, such vertical rods forming vertical package-receiving columns, and mounting arms attached to end vertical rods adjacent the tops thereof and extending rearward and having means adjacent their rearward ends for removably and movably engaging the forward top rod of a rearward rack.

References Cited in the file of this patent

UNITED STATES PATENTS

821,237	Hale	May 22, 1906
2,221,659	Wilkie	Nov. 12, 1940
2,532,600	Broersma	Dec. 5, 1950
2,609,937	Rubenstein	Sept. 9, 1952
2,723,036	Temple	Nov. 8, 1955