Jan. 16, 1934. H. L. JOHNSON 1,943,323

MARINE MOTOR FOR BEVEL GEAR PIVOTS FOR LOWER CASINGS

Original Filed July 14, 1928 2 Sheets-Sheet 1

Fig. 1

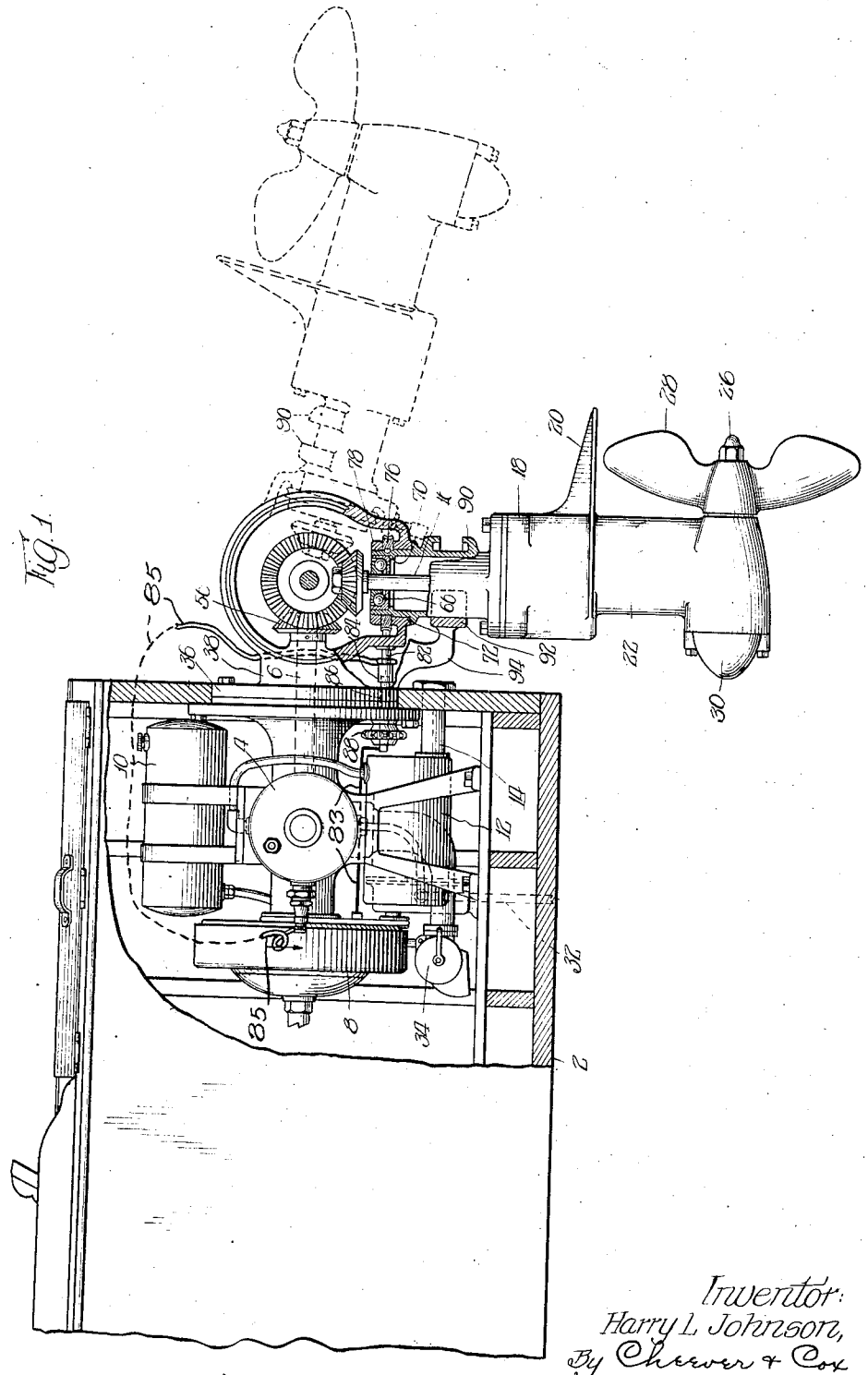

Inventor:
Harry L. Johnson,
By Cheever & Cox
Attys.

Jan. 16, 1934. H. L. JOHNSON 1,943,323

MARINE MOTOR FOR BEVEL GEAR PIVOTS FOR LOWER CASINGS

Original Filed July 14, 1928 2 Sheets-Sheet 2

Fig. 2.

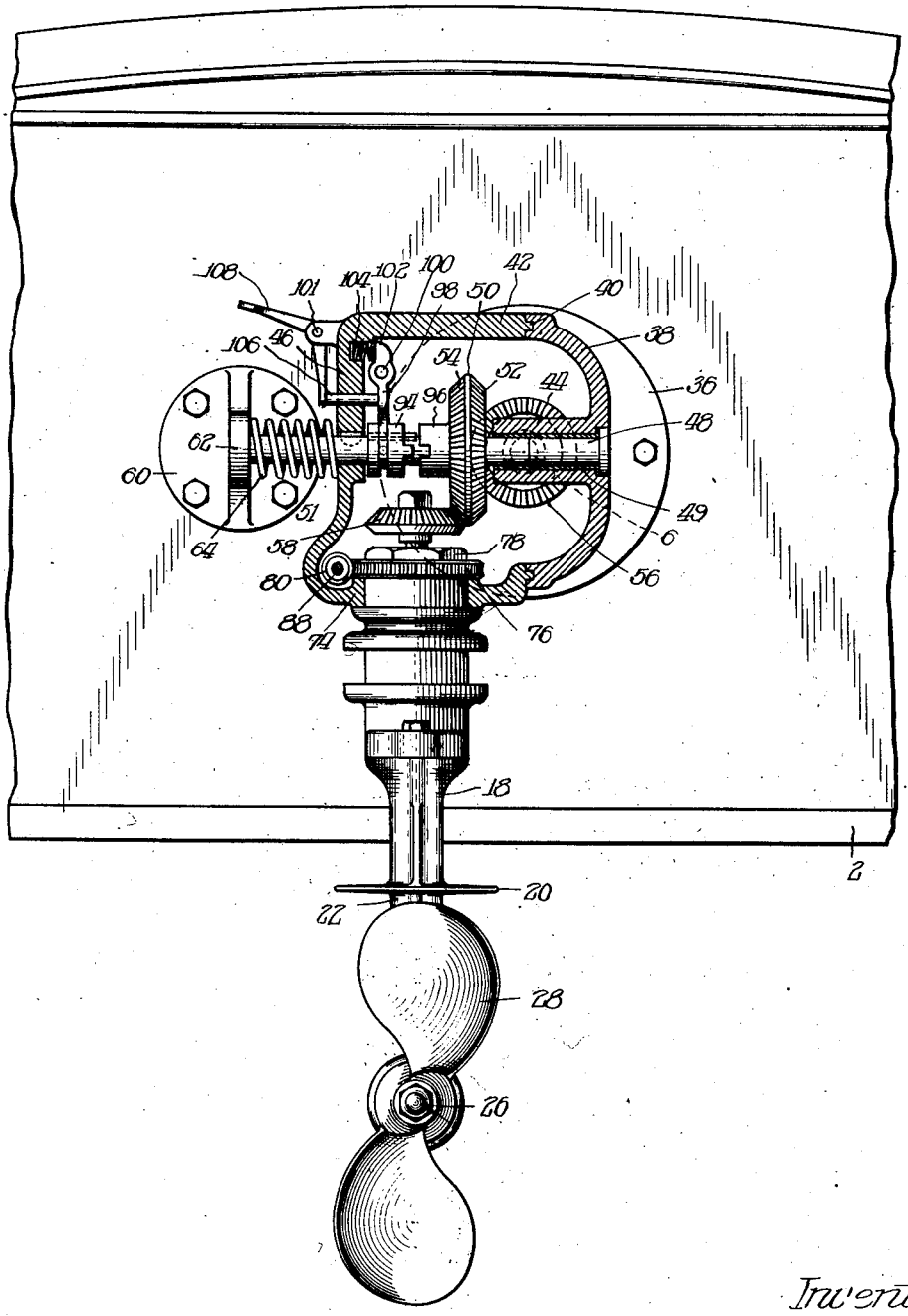

Inventor:
Harry L. Johnson.
By Cheever & Cox
Attys.

Patented Jan. 16, 1934 1,943,323

UNITED STATES PATENT OFFICE

1,943,323

MARINE MOTOR FOR BEVEL GEAR PIVOTS FOR LOWER CASINGS

Harry L. Johnson, Waukegan, Ill., assignor to Johnson Brothers Engineering Corporation, South Bend, Ind., a corporation of Indiana

Application July 14, 1928, Serial No. 292,876
Renewed September 14, 1931

45 Claims. (Cl. 115—41)

My invention relates to propulsion devices for water vehicles and more particularly to a submergible propeller carrying unit mounted at the rear of the water vehicle and driven by the prime move thereof and arranged so as to tilt upwardly so as to avoid obstructions such as sand bars, logs, and the like.

One of the objects of my invention is to provide a normally vertically disposed propeller carrying unit which is mounted at the rear of the water vehicle and driven by a motor having a substantially horizontally disposed drive shaft and arranged so that the propeller carrying unit as a whole may shift upwardly to avoid sand bars, logs, and the like.

Still another object of my invention resides in the arrangement of a prime mover such for instance as an inboard or outboard type of motor, which has a drive shaft disposed at the center of the water vehicle on which it is mounted and which has a driving connection with a water propeller disposed to one side of the center of the drive shaft whereby the tendency of the front of the boat to veer to one side due to the rotational movement of the propeller is substantially corrected by the placing of the propeller to one side of the central axis of the boat.

Another object of my invention resides in a novel type of geared connection between the substantially horizontal drive shaft of the inboard motor and the normally substantially vertically disposed driven shaft mounted on the propeller carrying unit whereby the latter may tilt upwardly to avoid obstructions while at the same time remaining in operatively geared connection with the engine drive shaft which latter remains stationary.

Still another object of my invention resides in the arrangement of a stationary inboard type of motor having a substantially horizontal drive shaft and in the arrangement of a submergible unit including a gear casing and carrying a propeller and enclosing a substantially vertically disposed drive shaft driven from the horizontal engine shaft which gear casing is adapted to turn about the substantially vertically disposed drive shaft as a center for steering and wherein the construction permits the gear casing and the propeller carried thereby to tilt upwardly to avoid obstructions.

Yet another object of my invention resides in the novel manner of automatically raising and lowering the propeller unit by rotating the drive shaft of the prime mover. An ancillary object of this aspect of my invention resides in the simple clutch arrangement for connecting and disconnecting the gearing between the prime mover drive shaft and propeller shaft to cause either the propulsion of the propeller from the prime mover drive shaft or to cause the raising and lowering of the propeller by the rotation of the drive shaft.

Further objects of my invention will be apparent from a perusal of the following specification when taken in connection with the accompanying drawings, wherein:

Figure 1 is a side view partly in section and partly perspective of my improved device; and

Figure 2 is an end view with certain parts broken away to show more clearly the construction.

Referring now to the drawings in detail, the water vehicle 2 may be of any type. It is provided directly at its stern, or if desired, within a recessed portion of the stern, with a propulsion device. In the embodiment illustrating my invention, I have provided a prime mover for operating the propeller of the propulsion device and this prime mover is preferably of the inboard motor type of gas engine consisting of the horizontally disposed double opposed cylinders 4 of the two cycle type, from which extends in rearward and in substantially horizontal direction, the engine drive shaft 6. At the forward end of this shaft is provided the usual combined flywheel and magneto 8 which may also include a rope starter, if desired. In addition there are the usual adjunctive devices such as the gasoline supply tank 10, the exhaust muffler 12, which preferably discharges through the rear of the boat through the exhaust conduit 14.

My propulsion device for driving the boat forwardly or backwardly consists in general in a submergible unit which has mounted therein and preferably enclosed in a water tight casing or housing, a substantially vertically disposed driven shaft 16. This shaft is normally disposed in vertical position and the enclosing housing 18 which surrounds it is formed at its lower portion of appropriate stream line contour. This housing comprises an upper stream line portion 18, the same being at and above the normal water level and also includes an anti-cavitation plate 20 which is at and slightly below the normal water level and includes also a lower stream line casing 22 with a substantially rounded stream line propeller carrying casing 24 which houses the substantially horizontal propeller shaft 26 on which is mounted the propeller 28 at the rear thereof. The front of this housing is

closed by a rounded dome-like cap 30, all of the parts making a water-tight casing. As is well known in the art, the propeller shaft 26 is geared by means of the usual bevel drive to the lower portion of the vertically disposed shaft 16. The path of the blades of the propeller 28 directly passes beneath the anti-cavitation plate 20. If desired, the anti-cavitation plate 20 may be hollow and may be formed with a water gathering mouth directly at the rear of the path of travel of the propeller blades as is shown in a co-pending application filed jointly by me and Louis J. Johnson, Serial No. 247,004, filed January 16, 1928, in which latter case the upper portion of the housing surrounding the shaft 16 will be provided with inlet and outlet nipples having a flexible piped connection through the stern of the boat to the water jacket of the engine. However, in the present application, I desire to provide the water jacket of the engine with a separate water circulating system wherein the water is drawn upwardly by means of a pump, through pipe 32 passing through the bottom of the boat by means of the pump 34 and circulating through the water jacket of the engine and thence discharged through the exhaust pipe 14.

Means is provided for permitting the submergible unit including the gear case and the propeller to tilt upwardly so as to avoid being damaged by contact with obstructions, such as sand bars, floating logs, rocks and the like, and to this end, the stern of the boat is provided with a sturdy bracket 36 from which outstands a stationary arm 38 forming one portion of a housing. This stationary housing 38 is adapted to make a sealed connection 40 with an oscillatable or rotatable complementary housing 42. Housings 38 and 42 are provided with inwardly extending sleeves 44 and 46 which provide spaced bearings for a horizontal transversely extending shaft 48. This shaft 48 rotates freely in a bushing 49 in the stationary housing 38. On the contrary, it is rigidly keyed as at 51 to the shiftable housing 42. This shaft 48 loosely carries thereon a bevel gear 50 having double or spaced bevel teeth 52 and 54, the former meshing with the bevel gear 56 on the outer end of the engine drive shaft 6 and the latter meshing with bevel gear 58 on the upper end of the vertically disposed driven shaft 16. A separate bracket 60 is attached to the stern of the vehicle to provide an abutment 62 and a coil spring 64 is coiled about the end of the horizontal shaft 48 between the abutment 62 and the exterior of the complemental gear casing 42 so as to press this portion of the casing firmly against the stationary casing portion 48, the grooved seal connection serving to retain the lubricant within this casing and to exclude water, moisture, dirt, and the like. The sealed connection 40 is of circular formation so as to permit the portion 42 to swing about the shaft 48 and its bearings as an axis and relatively to the stationary housing 38. During this swinging movement, it will be noticed that the bevel gears 52 and 54 will be continually in mesh with the bevel gear 58 on the drive shaft 6 and the bevel gear 58 on the vertically driven shaft 16.

The upper portion of the gear casing 18 extends upwardly as a substantially hollow tube 70 and is provided at its upper end with a roller bearing 66 for the upper end of the vertical shaft 16 and the outside of this tubular casing provides a seat 72 for a lower tubular portion 74 of the shiftable casing 42. In addition, the upper portion 70 of the tubular housing has keyed thereto a worm gear 76 held in place by a nut 78 and this worm gear in turn meshes with a small worm gear 80 on a shaft 82 set substantially at right angles thereto and terminating in a clutch socket 84 outside of the movable housing 42 as shown in Figure 1. This clutch socket 84 is adapted to be detachably connected with an angularly disposed portion of a sprocket shaft 86 which has a sprocket 88 on its inner end which may be driven by means of a suitable flexible chain from any desired location in the water vehicle. Hence by turning the sprocket 88, the lower propeller carrying casing and the propeller 28 are turned angularly about the vertical drive shaft 16. At the same time, it will be apparent that the clutch socket 84 permits the free connection and disconnection of this steering mechanism during the tilting movement of the submergible unit. The upper portion of the lower tilting unit is provided with an under cut collar 90 adapted to clutch with a thrust plate 92 on a stationary bracket 94 mounted on the stern of the vehicle. This arrangement permits the lower unit to be held in vertical position when the steering mechanism is turned 180 degrees to reversed position. In this event, the plate 92 will ride between and under the under cut portions of collar 90 and prevent outward tilting movement of the submergible unit while when the gear casing or submergible unit is in the forward driving position as shown in Figure 1 of the drawings, the plate 92 will be free from the collar 90 to permit free upward movement of this submergible unit.

An important feature of my invention resides in the means for preventing the rotational movement of the propeller throwing the boat out of its true forward course. It is well-known that in the ordinary rotational movement of the propeller depending on whether the propeller rotates clock-wise or anticlock-wise, the front of the boat will be drawn to the right or left. In the present instance, I have provided means for correcting this deflection of the front of the boat by disposing the vertically disposed shaft 16 and its housing which carries the propeller, to one side of the plane of the horizontally disposed drive shaft 6. For instance, in Figure 2 of the drawings, with the propeller rotating clockwise, as viewed from the rear of the propeller, it will have a tendency to turn the back end of the boat to the right and the front end of the boat to the left. By disposing the propeller to the left of the drive shaft 6, when viewing the rear of the structure, I have offset or substantially offset this deflecting tendency of the propeller so that the front of the boat with this arrangement will remain substantially on its course.

Another important feature of my invention resides in the means for raising and lowering the propeller and propeller housing including the drive shaft 16 so that at will this submergible structure may be lifted into the dotted line position or reversely may be moved to the downward position so as to make the clutch connection 84 with the steering mechanism. In the present instance I have provided a very compactly arranged mechanism for carrying this out which consists of a clutch 94 slidably mounted on shaft 48 and which clutch is adapted to engage with a cooperative clutch 96 which laterally projects and is rigid with the bevel gear 50 loosely mounted on shaft 48. Clutch 94 is provided with a lever 98 which lever is pivoted at 100 to the rotatable casing member. The lever is provided with a nose 102 normally spring pressed in one direction by a spring 104 which is housed in a recess of the ro-

tatable housing. In addition, a slidable pin 106 passes through an opening in this housing and is acted on by one end of a bell crank lever 108 pivoted at 110 to the housing. In this operation by pushing down on the outer end of the bell crank lever 108, the clutch is thrown to the right to thereby rigidly connect the bevel gear 50 with the stationary shaft 48. When released, the spring 104 will throw the clutch out to the left on its spline whereby to release the bevel gear 50. In this operation of the clutch when the bevel gear 50 is rigidly connected to the shaft 48 which in turn is rigid with the movable casing 42, the bevel gear 50 will be rigidly connected with the casing so that any tendency to turn the bevel gear 56 will result in turning the bevel gear 50 in one direction or the other and hence will result in turning the casing 42 so as to raise or lower it and this raising and lowering of the casing 42 will carry with it the propeller casing and the propeller. Therefore when it be desired to raise or lower the propeller, it is merely necessary to clutch the bevel gear 50 to shaft 48 and to casing 42 and then to turn over the engine either by hand or by the usual rope-starter or starting clutch. The foregoing provides a very ingenious mechanism for manually raising and lowering the propeller unit. Reversely, by releasing the lever 108, the device is installed to its operative position for driving the propeller by means of the engine shaft.

Another important feature of my invention resides in arranging the electric circuit for the ignition of the gas engine on the stationary inboard motor so that during the free tilting of the submergible unit, the ignition circuit is disconnected so as to stop the engine and permit the latter from raising. To this end, the clutch member 84 between the shaft 82 and the sprocket shaft 88 may itself form the electrical connection, or may be provided with appropriate contacts in the electric circuit for the gas engine so that when the steering clutch is connected, the circuit will be completed through a conductor 83 from the magneto 8 to sprocket shaft 86 thence through the clutch connection and from the opposite clutch member 84 by means of a conductor 85 to the engine spark plug or plugs, so that the engine may be ignited, but when the clutch connection is broken, the ignition system is likewise disconnected.

It will be understood that my invention is not limited to the exact arrangement of gearing which accomplishes the foregoing features of my invention. For instance, it is within the contemplation of my invention to arrange the gear drive for the submergible unit so that the gears are not constantly in mesh in both vertical drive position and in tilted position, but I prefer the present construction since it is very simple and eliminates the necessity of clutching and unclutching the vertically driven shaft 16 and at the same time permits the propeller carrying casing to swing upwardly to a position substantially clear or wholly clear of the bottom of the water vehicle 2. In my present construction, it will be noted that I provide means whereby the submergible unit or propeller carrying casing is in constant driving connection in any shifted position relative to the stationarily mounted inboard motor and also that when in its normal vertically disposed and operative driving position, it is in operative connection with the steering mechanism mounted on the water vehicle.

Having thus described my invention, what I claim as new and desire to secure by Letters Patent is:

1. In a device of the class described, the combination of a water vehicle having a prime mover including a substantially horizontally disposed drive shaft extending in a fixed location through the end of the vehicle, a housing mounted at the rear of said vehicle, through which said drive shaft projects, a complemental housing movably mounted on the end of said vehicle and shiftable relatively to said first mentioned housing, a propeller carrying casing turnably mounted in said movable housing for steering the vehicle and including a normally vertically disposed driven shaft, driving connections in said housings for gearing said driven shaft to said first mentioned drive shaft, a casing surrounding said vertically disposed driving shaft and a propeller mounted on said casing and operatively connected to said vertically disposed drive shaft, said gearing connections in said housings being constructed and arranged to permit said propeller carrying casing to tilt upwardly about a transverse axis with respect to the drive shaft of said prime mover and the end of the water vehicle.

2. In a device of the class described, the combination of a water vehicle having a prime mover mounted thereon provided with a substantially horizontally disposed drive shaft, a stationarily mounted housing on said vehicle through which said drive shaft projects, a complemental housing forming an enclosing casing and shiftable relatively to said first mentioned housing, said housings forming at their junction an arcuately disposed sealed connection, means for maintaining said sealed connection, said housings being provided with inwardly extending bearings, a transverse shaft mounted in said bearings and gearing on said transverse shaft connected with the drive shaft of the engine, a vertically disposed driven shaft, a vertically disposed housing surrounding said driven shaft, and turnably mounted in said movable housing, the upper end of said vertically disposed shaft being geared to said gearing on said transverse shaft, a propeller carrying shaft geared to said vertically disposed drive shaft and a propeller on said latter shaft, and means for turning said last mentioned housing, said means being operated from the water vehicle, said housing and gearing being constructed and arranged to permit the upward tilting of said propeller carrying housing.

3. In a device of the class described, the combination of a water vehicle having an engine mounted therein and provided with a horizontally disposed shaft extending in a fixed location through the stern, a propeller carrying housing adapted to be submerged in the water beneath the lower end of said water vehicle and including a substantially vertically disposed driven shaft operatively connected with the horizontal shaft, means for turning said propeller carrying housing about a vertical axis for steering, means for mounting said housing to tilt upwardly with respect to the fixed horizontal shaft, and steering means extending through the stern and connected to the housing and adapted to permit said propeller carrying housing to tilt upwardly substantially above the level of the water vehicle.

4. In a device of the class described, the combination of a water vehicle having a gas engine provided with a horizontally disposed shaft, a propeller carrying housing adapted to be submerged in the water beneath the lower end of said water vehicle and including a substantially

vertically disposed driven shaft operatively connected with the horizontal shaft, means for turning said propeller carrying housing, and steering means constructed and arranged to permit said propeller carrying housing to tilt upwardly about a transverse horizontal axis substantially above the level of the water vehicle, and means for disconnecting the steering mechanism during the tilting movement.

5. In a device of the class described, the combination of a water vehicle having a gas engine provided with a horizontally disposed shaft, a propeller carrying housing adapted to be submerged in the water beneath the lower end of said water vehicle and including a substantially vertically disposed driven shaft operatively connected with the horizontal shaft, means for turning said propeller carrying housing, and steering means constructed and arranged to permit said propeller carrying housing to tilt upwardly substantially above the level of the bottom of the water vehicle, and means for disconnecting the steering mechanism during the tilting movement, and means for shutting off the gas engine during the tilting movement.

6. In a device of the class described, the combination of a water vehicle having a gas engine provided with a horizontally disposed shaft, a propeller carrying housing adapted to be submerged in the water beneath the lower end of said water vehicle and including a substantially vertically disposed driven shaft operatively connected with the horizontal shaft, means for turning said propeller carrying housing, and steering means constructed and arranged to permit said propeller carrying housing to tilt upwardly substantially above the level of the bottom of the water vehicle, and means for disconnecting the steering mechanism during the tilting movement, and means for cutting out the ignition circuit of the gas engine during the tilting movement.

7. In a device of the class described, the combination of a water vehicle, an inboard motor thereon provided with a substantially horizontally disposed drive shaft, a bracket on the stern of said vehicle, a propeller carrying casing normally vertically disposed and mounted for angular movement in said bracket, a drive shaft in said propeller carrying casing and normally extending in vertical position, and operatively geared to the engine drive shaft, means for permitting said propeller casing to tilt upwardly to avoid obstructions, and means for turning said propeller carrying casing for steering and reversing, and means on said propeller carrying casing and water vehicle for locking the propeller carrying casing from tilting movement when in reversed position.

8. In a device of the class described, the combination of a water vehicle having an inboard motor mounted thereon provided with a horizontally disposed drive shaft, a hollow housing mounted on said water vehicle and into which the rear end of said drive shaft projects, said housing including relatively shiftable parts, a propeller carrying casing shiftably mounted in the movable one of said relatively shiftable housing parts, said propeller carrying casing including a drive shaft extending upwardly into said housing, and geared connections in said housing between said latter shaft and the engine shaft, said housing and geared connections being constructed and arranged to permit the upward tilting of said propeller carrying casing about a transverse horizontal axis to avoid obstructions, and means for turning said propeller carrying casing relative to said movable portion of said housing for steering.

9. In a device of the class described, the combination of a water vehicle provided with a stationary prime mover having a horizontally disposed drive shaft located at the central longitudinal axis of the boat and provided with a bevel gear thereon, a cross shaft having a second bevel gear meshing with said first mentioned bevel gear, a propeller shaft vertically disposed and having a third bevel gear meshing with said second bevel gear, a support and a propeller on said support operated by said propeller shaft, said propeller shaft being located to one side of the axis of the drive shaft for the purpose of correcting the tendency of the propeller to deflect the front of the boat laterally.

10. In a device of the class described, the combination of a water vehicle, a prime mover thereon having a drive shaft, a support on said boat, a propeller shaft and propeller mounted on said support, and means operable by the drive shaft for raising and lowering the propeller shaft and propeller.

11. In a device of the class described, the combination of a water vehicle, a prime mover thereon having a drive shaft, a support, a propeller shaft on said support, a propeller on said support operated by said propeller shaft, and operative means between said drive shaft and propeller shaft, said connection including means for operating the propeller from the engine shaft or for raising and lowering the propeller from the engine shaft.

12. In a device of the class described, the combination with a water vehicle having a prime mover provided with a drive shaft, a propeller for said boat having a shaft operatively connected to said drive shaft for rotating said propeller, and means associated with said driving connection for causing the same to raise and lower the propeller with respect to said boat.

13. In a device of the class described, the combination with a water vehicle, a prime mover thereon having a substantially horizontal shaft provided with a bevel gear, a second shaft, a shiftable support on which said second shaft is rigidly mounted, a second bevel gear loosely mounted on said second shaft, a propeller shaft and propeller mounted on said shiftable support, said propeller shaft terminating in a bevel gear meshing with said loose bevel gear, and means for clutching said loose bevel gear to its shaft whereby to make the same rigid with said shiftable support whereby on rotation of said prime mover drive shaft said propeller support will be raised or lowered.

14. In a device of the class described, the combination of a water vehicle, a prime mover thereon having a substantially horizontally disposed shaft terminating in a bevel gear, a stationary housing enclosing the rear end of said shaft, a shiftable housing forming with said stationary housing an enclosed casing, a shaft mounted with respect to said stationary housing and stationarily mounted in said shiftable housing, a second bevel gear in said housing and meshing with said first mentioned bevel gear, and being loosely mounted on said second shaft, a vertically disposed support mounted on said shiftable housing, a propeller shaft mounted in said latter support and terminating at its upper end in a bevel gear meshing with said loosely mounted bevel gear, a propeller on the lower end of said vertical sup-

port operatively connected with said propeller shaft, a clutch slidably keyed on said second shaft and adapted to clutch with said loosely mounted bevel gear, means for shifting said clutch in one direction and spring means for normally throwing said clutch out of contact with said loosely mounted bevel gear.

15. The combination of a boat and a prime mover therefor having a stationary horizontal shaft extending through the rear of the boat, a propeller shaft, a gearing connection between the propeller and drive shafts to permit the propeller shaft to swing upwardly about the outer end of the drive shaft, a shiftable support in which the propeller shaft and propeller are mounted which is rotated about the propeller shaft as an axis for steering, and means for operating the shiftable support from the boat which includes a clutch connection which is separated when the shiftable support is rotated with the propeller shaft to swing upwardly about its transverse axis.

16. In a water propelled vehicle, a stationary engine, a driving shaft extending therefrom through the end of the vehicle, a propeller and a vertical propeller driving shaft, a casing having a portion affixed to the end of the vehicle and a portion rotatable about a transverse axis in the fixed portion of the casing, a shiftable support mounted in the rotatable casing portion for mounting the propeller and the propeller driving shaft therein and rotatable for steering, and a train of gears connecting the driving and propeller driving shafts in the casing and permitting the said support and the rotatable casing portion to swing upwardly about a transverse axis at the end of the engine drive shaft.

17. A water propelled vehicle having a stationary engine, a driving shaft extending through the end of the vehicle, a propeller and a propeller shaft, a support in which the propeller and its shaft are rotatable for steering, a train of gears connecting the driving and propeller shafts to permit the propeller support to swing upwardly about a transverse horizontal axis, a housing for the train of gears comprising a fixed and rotatable part and means opposite the fixed part of the casing for engaging the movable part of the casing and holding the two casing parts yieldingly together.

18. The combination with a boat of a stationary engine mounted in the stern of the boat having a shaft which extends through the stern; a propeller, a propeller driving shaft and a support in which they are mounted and rotatable for steering; and means comprising a train of gears located in three different planes for connecting the propeller and driving shafts and allowing the said support to swing upwardly about a transverse horizontal axis without disconnecting the train of gears.

19. The combination of a boat having a stationary engine with its driving shaft extending through the stern, a bevel gear at the outer end of the shaft, a cross shaft having a second bevel gear meshing therewith, a propeller driving shaft disposed vertically and having a third bevel gear meshing with the second bevelled gear, a support rotatable for steering and a propeller on said support operated by the propeller driving shaft, the support being movable upwardly at the rear of the boat about a transverse axis so that the propeller will avoid obstructions.

20. The combination with a water vehicle, of an inboard motor having a horizontal drive shaft extending through the stern thereof, a vertical propeller carrying unit having a driving connection with the outer end of the shaft, and means for mounting the unit on the outside of the stern to tilt upwardly about an axis transverse to the longitudinal axis of the boat to avoid obstructions.

21. The combination with a boat, of an engine fixed therein having a shaft extending in a substantially horizontal location through the stern of the boat, a driving unit pivoted on the outside of the boat stern and comprising a vertical shaft having a driving connection with the horizontal shaft and a propeller at the lower end of the vertical shaft below the boat, the vertical shaft and the propeller comprising the driving unit tilting upwardly about the stern of the boat in a fore and aft vertical plane to swing the propeller upwardly to avoid obstructions.

22. The combination with a boat, of an engine fixed therein having a substantially horizontal shaft extending in a fixed location through the stern, a propeller carrying unit comprising a normally vertical drive shaft having a bevel gear connection with the other shaft, and means for mounting the unit to tilt upwardly about the stern of the boat in a vertical longitudinal plane to swing the propeller clear of obstructions and above the bottom of the boat.

23. The combination with a boat, of an inboard engine mounted therein having a horizontal drive shaft extending in a fixed location through the stern, a propeller carrying unit comprising a casing and a normally vertical drive shaft, a driving connection between the two shafts, means for mounting the propeller carrying unit to tilt upwardly about the stern of the boat to avoid obstructions, and means for rotating the casing for steering.

24. The combination with a boat, of a stationary engine therein with a horizontal drive shaft extending through the stern in a fixed location, a propeller carrying casing having a normally vertical drive shaft therein, a driving connection between the shafts, and means for mounting the casing to tilt upwardly about an axis transverse to the engine shaft to clear the boat bottom and avoid obstructions.

25. The combination with a boat, of an engine fixed therein having a horizontal shaft extending in a fixed location through the stern, a normally vertical propeller carrying casing and means for rotating it about a vertical axis for steering, a vertical shaft in the casing, a driving connection between the shafts, and means for mounting the casing and its normally vertical shaft to tilt upwardly with respect to the fixed horizontal shaft at the stern of the boat to avoid obstructions.

26. The combination with a boat, of an engine mounted therein having a substantially horizontal drive shaft extending in a fixed location through the stern, a normally vertical propeller carrying casing having a propeller normally disposed below the bottom of the boat and a vertical driving shaft, means including a housing in which the casing is rotatable about a vertical axis for steering, a driving connection between the vertical and horizontal shafts, and means for mounting the housing on the outside of the stern to tilt upwardly with said casing to raise the propeller above the bottom of the boat to avoid obstructions.

27. The combination with a boat, of an engine mounted therein having a horizontal drive shaft extending through the stern at a fixed location, a propeller carrying housing having a propeller normally below water level and a normally vertical driving shaft therefor connected with the

horizontal drive shaft, a pivotal mounting for the housing at the stern of the boat to permit it to tilt upwardly to avoid obstructions, means for rotating a portion of the housing about a vertical housing for steering, and means extending from within through the stern of the boat for engaging the rotatable portion of the housing for steering when it is in normal position and permitting the housing to tilt upwardly about the stern of the boat.

28. The combination with a boat, of an engine mounted therein having a horizontal drive shaft extending through the stern at a fixed location, a propeller carrying housing normally submerging the propeller below the stern, and including a normally vertical driven shaft operatively connected with the horizontal shaft, means for mounting the propeller carrying housing to turn for steering, a pivotal mounting for the housing at the stern of the boat to permit it to tilt upwardly with respect to the horizontal shaft, and means for disconnecting the steering means during the tilting movement.

29. The combination with a boat, of a gas engine having a horizontal drive shaft, a propeller carrying housing having its lower end normally below water level at the rear of the boat, and including a vertical drive shaft operatively connected with the horizontal drive shaft, means for mounting the housing to tilt upwardly so the lower end will avoid obstructions, and an ignition circuit for the gas engine which is broken to shut off the engine during the tilting movement of the housing.

30. The combination with a boat, of an inboard motor mounted therein, an outboard driving unit comprising a vertical shaft having a horizontal driving connection with the motor, means for mounting the driving unit to tilt upwardly about the stern of the boat to avoid obstructions, means to rotate the lower end of the unit for steering and reversing, and reverse locking means for engaging the rotatable portion of the unit for locking it from tilting movement when in reversing position.

31. The combination with a boat, of a stationary inboard engine mounted therein, an outboard propeller driving unit comprising a vertical shaft having a horizontal driving connection with the engine, and means for mounting the unit to tilt upwardly and rearwardly about an axis transverse to the longitudinal axis of the boat to avoid obstructions.

32. The combination with a boat, of a stationary inboard engine mounted therein having a substantially horizontal drive shaft extending through the stern, an outboard propeller driving unit comprising a normally vertical driving shaft connected to the outer end of the engine drive shaft, and means for mounting the unit to tilt the propeller upwardly in a fore and aft vertical plane with respect to the engine shaft to avoid obstructions.

33. An outboard marine motor drive unit for attachment to the stern of a boat, comprising a propeller at the bottom, a normally vertical driving shaft therefor, a horizontal driving connection at the top of the shaft to extend through the stern of a boat, and means for mounting the unit on the stern of a boat so that the propeller and the vertical shaft will tilt upwardly in a vertical plane parallel to the axis of the boat to move the propeller to avoid obstructions.

34. A marine motor drive unit comprising a horizontal drive shaft a vertical driving shaft, a propeller at the lower end operated by the vertical shaft, a driving connection at the upper end of the vertical shaft adapted to be connected to said horizontal shaft, and means for mounting the vertical shaft and the propeller to tilt upwardly in a vertical plane parallel to the longitudinal axis of a boat so the propeller will avoid obstructions.

35. A marine motor having a stationary engine with a horizontal drive shaft to extend through the end of a boat, an outboard driving unit comprising a vertical shaft with a connection at its upper end with the engine shaft and a propeller at its lower end operated thereby, and means for mounting the vertical shaft and propeller to tilt upwardly in a longitudinal vertical plane at the end of a boat and with respect to the engine shaft so the propeller will avoid obstructions.

36. In a device of the class described, the combination of a water vehicle having a prime mover provided with a fixed and substantially horizontally disposed driving shaft, a submergible unit carrying a propeller and having a normally vertically disposed driven shaft operatively connected with the first-mentioned shaft, and means whereby said propeller carrying unit may tilt upwardly with respect to the driving shaft in a fore and aft vertical plane substantially above the bottom of the water vehicle to avoid obstructions.

37. In a device of the class described, the combination of a water vehicle, an inboard type of motor having a horizontally disposed drive shaft extending in a fixed location through the stern thereof, a propeller carrying unit normally disposed in vertical position and carrying a propeller having its shaft in normal horizontal position, means for driving said vertically disposed shaft from said horizontal shaft, said means being constructed and arranged to permit the propeller carrying unit to tilt upwardly in a plane parallel to the longitudinal axis of the vehicle with respect to the horizontally disposed shaft of the inboard motor and to substantially clear the bottom of the vehicle.

38. In a device of the class described, the combination with a water vehicle having a prime mover rigidly mounted thereon provided with a substantially horizontally disposed drive shaft extending in a fixed location through the vehicle stern, a propeller carrying unit consisting of a normally substantially vertically disposed drive shaft geared to a normally horizontally disposed propeller carrying shaft and bevel gearing construction operatively connecting the upper end of said vertically disposed drive shaft and said horizontally disposed engine shaft, and means including said bevel gearing for mounting said propeller carrying unit to swing its substantially vertical shaft upwardly in a vertical plane about an axis transverse to the longitudinal axis of the vehicle to substantially clear the bottom of the vehicle to avoid obstructions.

39. In a device of the class described, the combination with a water vehicle having a prime mover thereon provided with a substantially horizontally disposed drive shaft extending in a fixed location through the vehicle, a propeller carrying unit consisting of a normally substantially vertically disposed drive shaft, geared to a normally horizontally disposed propeller carrying shaft, and bevel gearing construction operatively connecting the upper end of said vertically disposed drive shaft and said horizontally disposed engine shaft, and means including said bevel gearing for permitting said propeller carry-

ing unit to swing upwardly in a longitudinal vertical plane about a transverse axis at the outer end of the horizontally disposed drive shaft to substantially clear the bottom of the vehicle to avoid obstructions, said gearing remaining in mesh during the tilting movement of said propeller carrying unit.

40. In a device of the class described, the combination of a water vehicle, an inboard type of motor mounted thereon and having a horizontally disposed drive shaft extending in a fixed location through the vehicle stern, a bracket on said vehicle and providing spaced bearings, a horizontal shaft mounted in said bearings, a bevel gear mounted on said horizontal shaft and meshing with a bevel gear on the end of said motor shaft, a propeller carrying casing mounted in said bracket and including a vertically disposed drive shaft having a bevel gear on its upper end meshing with said last-mentioned bevel gear, a propeller shaft geared to the lower end of said vertically disposed shaft and carrying a propeller, and means for turning said propeller carrying casing about the vertically disposed shaft, and means for permitting said propeller carrying casing to tilt upwardly in a vertical fore and aft plane about a transverse axis with respect to the horizontal shaft of the motor.

41. The combination of a boat and a marine motor therefor, comprising an engine fixed in the boat, a driving shaft extending from the engine through the hull of the boat, a propeller, and a vertical propeller driving shaft having a gearing connection with the propeller at its bottom and a gearing connection with the driving shaft at its top permitting the vertical propeller driving shaft to swing upwardly in a vertical fore and aft plane about an axis transverse to the engine driving shaft.

42. A water propelled vehicle in combination with a stationary engine, a drive shaft extending therefrom through the hull of the vehicle, a propeller and a vertical propeller driving shaft, means comprising a train of gears connecting the shafts, the train of gears being connected to actuate the vertical propeller driving shaft and to allow said vertical driving shaft to swing upwardly in a longitudinal vertical plane about an axis transverse to the drive shaft without destroying the connection between the shafts.

43. In a water propelled vehicle, a stationary engine, a drive shaft extending therefrom through the hull of the vehicle, a propeller and a vertical propeller driving shaft, means comprising a train of gears connecting the shafts, a casing having a portion affixed at the end of the vehicle and a portion rotatable relatively thereto in which the propeller driving shaft is rotatable for steering, the rotatable portion of the casing being mounted to swing the propeller driving shaft upwardly about the fixed casing portion as a horizontal axis in a fore and aft vertical plane without disconnecting the train of gears.

44. The combination with a boat, of a stationary engine therein having a horizontal shaft extending through the hull of the boat and provided at its outer end with a bevel gear, a second shaft, a shiftable support on which said second shaft is mounted, a second bevel gear loosely mounted on said second shaft, a vertical propeller driving shaft and a propeller therefor mounted on said shiftable support to swing in a fore and aft vertical plane, said propeller driving shaft terminating in a bevel gear also meshing with said second bevel gear.

45. A boat propulsion system comprising an inboard motor, a drive shaft and casing extending therefrom to the hull, and an outboard transmission unit having a driving connection with the shaft and hinged to the outer end of the casing to tilt rearwardly upward.

HARRY L. JOHNSON.