Innovation, Sciences et Développement économique Canada
Office de la Propriété Intellectuelle du Canada

Innovation, Science and Economic Development Canada
Canadian Intellectual Property Office

CA 2801381 C 2018/06/19

(11)(21) 2 801 381

(12) BREVET CANADIEN
CANADIAN PATENT

(13) C

(22) Date de dépôt/Filing Date: 2013/01/11

(41) Mise à la disp. pub./Open to Public Insp.: 2013/09/27

(45) Date de délivrance/Issue Date: 2018/06/19

(30) Priorité/Priority: 2012/03/27 (US13/431,582)

(51) Cl.Int./Int.Cl. *G01P 5/00* (2006.01)

(72) Inventeurs/Inventors:
KOEHN, JASON ANDREW, US;
WHITLEY, JAMES K., US;
SNELL, SHAWN PAUL, US

(73) Propriétaire/Owner:
THE BOEING COMPANY, US

(74) Agent: SMART & BIGGAR

(54) Titre : SYSTEME DE CARTOGRAPHIE D'UN PROFIL DE VITESSE
(54) Title: VELOCITY PROFILE MAPPING SYSTEM

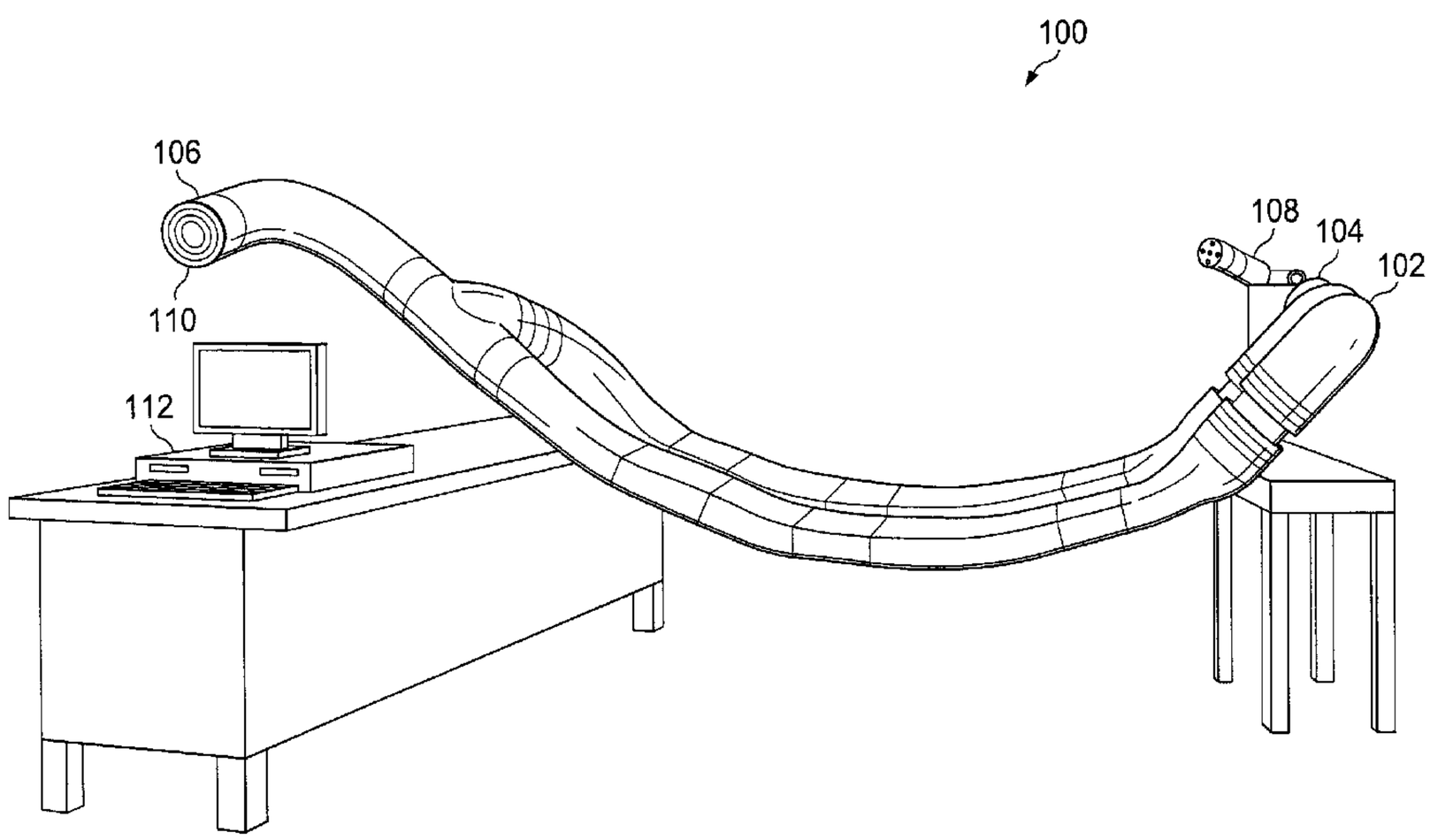

(57) Abrégé/Abstract:
A velocity mapping system (202) comprising a sensor system (204) and an airflow mapper (206). The sensor system (204) is configured to generate data (232) about a velocity (218) of airflow (214) for a location in a duct system (216). The airflow mapper (206) is configured to receive the data (232) from the sensor system (204) and generate a profile (236) of the velocity (218) of the airflow (214) at the location (230) in the duct system (216).

ABSTRACT

A velocity mapping system (**202**) comprising a sensor system (**204**) and an airflow mapper (**206**). The sensor system (**204**) is configured to generate data (**232**) about a velocity (**218**) of airflow (**214**) for a location in a duct system (**216**). The airflow mapper (**206**) is configured to receive the data (**232**) from the sensor system (**204**) and generate a profile (**236**) of the velocity (**218**) of the airflow (**214**) at the location (**230**) in the duct system (**216**).

VELOCITY PROFILE MAPPING SYSTEM

BACKGROUND

The present disclosure relates generally to airflow and, in particular, to measuring the velocity of the airflow. Still more particularly, the present disclosure relates to a method and apparatus for mapping the multiple velocities of airflow that may be found in a duct.

A duct is an enclosed passage or channel for conveying a substance, such as a gas or liquid. Ducts are commonly used throughout an aircraft. For example, ducts are part of a duct system used in an air distribution system for an environmental control system in the aircraft.

An air distribution system in an aircraft may be used during the operation of components in an environmental control system. For example, the ducts in the air distribution system may be used to supply or remove air from different locations in the aircraft. The movement of air into or out of these locations may occur during the operation of systems, such as a cabin air conditioning and temperature control system (CACTCS), a cabin pressure control system (CPCS), an electrical and electronic cooling system (EECS), an integrated cooling system (ICS) for a cargo bay, a power electronics cooling system (PECS), and other suitable systems.

Each of these systems employs airflow management. For example, one or more of these systems may perform flow balancing, distribution of air throughout the cabin of the aircraft, flow regulation, and/or other functions in managing airflow. The movement of air to different locations during the operation of the systems occurs through a duct system in the aircraft.

Further, the flow of air through the duct system also may be used to cool equipment in the aircraft. Without proper cooling, equipment may be overheated and may not function as desired. If the equipment receives more airflow than needed, other areas, such as the passenger cabin, may not be cooled as much as desired.

In controlling airflow through a duct system, airflow sensors and airflow controllers may be placed in different locations in the ducts within a duct system. The airflow sensors and airflow controllers may be used to manage the airflow within the duct system.

However, duct systems may have complex configurations such that the airflow is not consistent throughout the duct systems. For example, a duct system may have multiple bends, different diameters, splits, and other features that may affect the airflow.

These different features may result in different velocities of airflow in different locations of the duct system or different velocities of airflow across a cross-section of the duct system. With these different features, eddy currents may occur in the airflow in one or more different portions of the duct system.

If an airflow sensor is placed in a location where an eddy current occurs, the velocity of the airflow measured by the airflow sensor may not be as high as expected for the duct system based on the airflow into the duct system. As a result, an airflow sensor may not provide as accurate of an indication of the velocity of the airflow as desired, for example, across a cross-section of the duct, depending on the location of the airflow sensor within the duct system.

As a result, the different systems controlling the airflow controller may not provide a desired level of airflow for functions, such as cooling, heating, removal of undesired gases, and other functions within the aircraft. Thus, equipment may operate at a higher temperature than desired, a passenger cabin may be warmer than desired, a flight deck may be cooler than desired, and/or other undesired effects may occur. Therefore, it would be desirable to have a method and apparatus that takes into account at least some of the issues discussed above, as well as other possible issues.

SUMMARY

In one aspect, there is provided a velocity mapping system comprising a sensor system configured to generate data about a velocity of airflow for a location in a duct system; and an airflow mapper configured to receive the data from the sensor

system and generate a profile of the velocity of the airflow at the location in the duct system; an air source configured to be connected to an input end of the duct system and generate the airflow in the duct system; wherein the airflow generated by the air source has a known flow rate; wherein the profile comprises data points in which a data point in the data points is a percentage of a maximum air velocity; a duct velocity profile database, wherein the duct velocity profile database is a database of profiles of different duct systems, and wherein the profile may be saved in the duct velocity database; and wherein the sensor system comprises a sensor array configured to measure the velocity of the airflow and generate the data from measuring the velocity of the airflow, wherein the sensor array comprises sensors and a frame having a shape that corresponds to a shape of a cross-section in the duct system, wherein the sensors are arranged in a grid on the frame.

In another aspect, there is provided a method for analyzing airflow in a duct system, the method comprising generating data about a velocity of the airflow for a location in the duct system using a sensor system comprising a sensor array comprising sensors and a frame having a shape that corresponds to a shape of a cross-section in the duct system, wherein the sensors are arranged in a grid on the frame; generating a profile of the velocity of the airflow at the location; and displaying the profile on a display system, the profile comprises data points in which a data point in the data points is a percentage of a maximum air velocity; and storing the profile in a library of profiles for a plurality of duct systems.

In a further aspect, there is provided a velocity mapping system comprising a sensor system configured to generate data about a velocity of airflow for a location in a duct system, wherein the sensor system comprises a sensor array having one or more sensors and a frame that has a shape that corresponds and conforms to a shape of a cross section of the duct system in the location where the sensor array is placed; an airflow mapper configured to receive the data from the sensor system and generate a profile of the velocity of the airflow at the location in the duct system; and an air source configured to be connected to an input end of the duct system and generate the airflow in the duct system; wherein the profile comprises a number of sets of data for different points in space and time, in which a set of data in the number

of sets of data represents one or more velocities of airflow found across the cross section of the duct system for a point in time; wherein the data is for portions of the cross section of the duct system at the location and the airflow mapper is configured to interpolate the data of for the portions of the cross section to generate data for missing portions of the cross section of the duct system; wherein the sensor system measures values for velocity of airflow across the cross section of the duct system; wherein the sensor system generates the data that is only for the portions in the cross section of the duct system; wherein the airflow mapper is configured to graphically indicate velocity of airflow for the cross section by displaying the profile on a display system in a form of a map; wherein the map graphically indicates the velocity of the airflow for the cross section of the duct system in the location; wherein display of the velocity for the cross section of the duct system in the map changes as the velocity changes in different sets of data in the sets of data, and wherein the profile comprising the number of sets of data representing the one or more velocities of the airflow found across the cross section of the duct system for different points in space and time is saved in a duct velocity profile database of profiles for different duct systems, whereby the profiles of duct systems generated by the velocity mapping system may be used in maintenance and service of an air distribution system in an aircraft.

In another aspect, there is provided a method for analyzing airflow in a duct system, the method comprising generating, via a sensor system, data about a velocity of the airflow for a location in the duct system, wherein the sensor system comprises a sensor array having one or more sensors and a frame that has a shape that corresponds and conforms to a shape of a cross section of the duct system in the location where the sensor array is placed; and generating a profile of the velocity of the airflow at the location; wherein an air source connected to an input end of the duct system generates the airflow in the duct system; wherein the profile comprises a number of sets of data for different points in space and time, in which a set of data in the number of sets of data represents one or more velocities of airflow found across the cross section of the duct system for a point in time; wherein the data is for

portions of the cross section of the duct system at the location and an airflow mapper is configured to interpolate the data of the portions of the cross section to generate data for missing portions of the cross section of the duct system; wherein the sensor system measures values for velocity of airflow across the cross section of the duct system; wherein the sensor system generates the data that is only for the portions in the cross section of the duct system; wherein the airflow mapper is configured to graphically indicate velocity of airflow for the cross section by displaying the profile on a display system in a form of a map; wherein the map graphically indicates the velocity of the airflow for the cross section of the duct system in the location; wherein display of the velocity for the cross section of the duct system in the map changes as the velocity changes in different sets of data in the sets of data; and wherein the profile comprising the number of sets of data representing the one or more velocities of the airflow found across the cross section of the duct system for different points in space and time is saved in a duct velocity profile database of profiles for different duct systems, whereby the profiles of duct systems generated by the velocity mapping system may be used in maintenance and service of an air distribution system in an aircraft.

In a further aspect, there is provided a velocity mapping system comprising a sensor system configured to generate data about a velocity of airflow for a location in a duct system, wherein the sensor system comprises a sensor array having one or more sensors and a frame connected to an output of the duct system, wherein the one or more sensors generate the data about the velocity of the airflow, wherein the one or more sensors comprise one or more of a pitot tube or a gas turbine, and wherein the frame has a shape that corresponds and conforms to a shape of a cross section of the duct system in the location where the sensor array is placed; an airflow mapper configured to receive the data from the sensor system and generate a profile of the velocity of the airflow at the location in the duct system; and an air source configured to be connected to an input end of the duct system and generate the airflow in the duct system; wherein the profile comprises a number of sets of data in which a set of data in the number of sets of data represents one or more velocities of

airflow found across the cross section of the duct system for a point in time; wherein the data is for portions of the cross section of the duct system at the location and the airflow mapper is configured to interpolate the data for the portions of the cross section to generate data for missing portions of the cross section of the duct system; wherein the sensor system measures values for velocity of airflow across the cross section of the duct system; wherein the sensor system generates the data that is only for the portions in the cross section of the duct system; wherein the airflow mapper is configured to graphically indicate velocity of airflow for the cross section by displaying the profile on a display system in a form of a map; wherein the map graphically indicates the velocity of the airflow for the cross section of the duct system in the location; wherein display of the velocity for the cross section of the duct system in the map changes as the velocity changes in different sets of data in the sets of data; and wherein the profile comprising the number of sets of data representing the one or more velocities of the airflow found across the cross section of the duct system for different points in space and time is saved in a duct velocity profile database of profiles for different duct systems, whereby the profiles of duct systems generated by the velocity mapping system may be used in maintenance and service of an air distribution system in an aircraft.

In one illustrative embodiment, a velocity mapping system comprises a sensor system and an airflow mapper. The sensor system is configured to generate data

about a velocity of airflow for a location in a duct system. The airflow mapper is configured to receive the data from the sensor system and generate a profile of the velocity of the airflow at the location in the duct system; wherein a sensor array of the sensor system comprises one or more sensors and comprises a frame; wherein the sensors are associated with the frame; and wherein the frame has a shape that corresponds and conforms to a shape of a cross section of the duct system in the location where the sensor array is placed.

In another illustrative embodiment, a method for analyzing airflow in a duct system is present. Data is generated, via a sensor system, about a velocity of the airflow for a location in a duct system. A profile of the velocity of the airflow is generated at the location; wherein a sensor array of the sensor system comprises one or more sensors and comprises a frame; wherein the sensors are associated with the frame; and wherein the frame of the sensor system has a shape that corresponds and conforms to a shape of a cross section of the duct system in the location where the sensor array is placed.

The features and functions can be achieved independently in various embodiments of the present disclosure or may be combined in yet other embodiments in which further details can be seen with reference to the following description and drawings.

BRIEF DESCRIPTION OF THE DRAWINGS

The novel features believed characteristic of the illustrative embodiments are set forth in the appended claims. The illustrative embodiments, however, as well as a preferred mode of use, further objectives, and features thereof will best be understood by reference to the following detailed description of an illustrative embodiment of the present disclosure when read in conjunction with the accompanying drawings, wherein:

Figure 1 is an illustration of a velocity mapping environment in accordance with an illustrative embodiment;

Figure 2 is an illustration of a block diagram of a velocity mapping environment in accordance with an illustrative embodiment;

Figure 3 is an illustration of a block diagram of a profile in accordance with an illustrative embodiment;

Figure 4 is an illustration of a block diagram of a design environment in accordance with an illustrative embodiment;

Figure 5 is an illustration of a flowchart of a process for analyzing airflow in a duct system in accordance with an illustrative embodiment;

Figure 6 is an illustration of a map in accordance with an illustrative embodiment;

Figure 7 is an illustration of a map in accordance with an illustrative embodiment;

Figure 8 is an illustration of a data processing system in accordance with an illustrative embodiment;

Figure 9 is an illustration of an aircraft manufacturing and service method in accordance with an illustrative embodiment; and

Figure 10 is an illustration of an aircraft in which an illustrative embodiment may be implemented.

DETAILED DESCRIPTION

The illustrative embodiments recognize and take into account one or more different considerations. For example, the illustrative embodiments recognize and take into account that with the differences in the velocity of the airflow in a duct system, locations of sensors in the duct system may need to be relocated or the difference in airflow may need to be taken into account.

For example, a sensor may be moved from a location in which the velocity of the airflow is lower than the velocity of the airflow at the output of the duct system to a location where the velocity of the airflow is the same as the velocity of the airflow at the output of the duct. Alternatively, the difference between the velocity of the airflow at the output of the duct system and the velocity of the airflow measured by the sensor in the location may be identified. This difference may be taken into account in the data generated by the sensor for the velocity of the airflow for use in managing the airflow through the duct system. Variations in velocity of the airflow may also occur for cross sections in other locations in the duct system.

The illustrative embodiments also recognize and take into account that the airflow at the output of the duct system may have different velocities in different locations at the output. In other words, airflow moving through a plane at the output of the duct system may have different velocities at different locations in that plane. The uniformity of the velocity of the airflow through this plane may vary more as the configuration of the duct system becomes more complex.

Thus, the illustrative embodiments provide a method and apparatus for analyzing airflow in a duct system. In one illustrative embodiment, a velocity mapping system comprises a sensor system and an airflow mapper. The sensor system is configured to generate data about the velocity of the airflow for a location in a duct system. The airflow mapper is configured to receive the data from the sensor system and generate a profile of the velocity of the airflow at the location in the duct system.

With reference now to the figures and, in particular, with reference to **Figure 1**, an illustration of a velocity mapping environment is depicted in accordance with an illustrative embodiment. In this depicted example, velocity mapping environment **100** may be used to generate a velocity profile for duct system **102**.

In this illustrative example, duct system **102** is an example of a duct system that may be used in a platform, such as an aircraft. Of course, duct system **102** may be used in other types of platforms in addition to or in place of an aircraft. For example, without limitation, duct system **102** may be used in a platform selected from one of a mobile platform, a stationary platform, a land-based structure, an aquatic-based structure, a space-based structure, or some other suitable platform. More specifically, duct system **102** may be used in a surface ship, a tank, a personnel carrier, a train, a spacecraft, a space station, a satellite, a submarine, an automobile, a power plant, a bridge, a dam, a manufacturing facility, and a building.

As depicted, duct system **102** is comprised of a plurality of ducts that are connected to each other. Duct system **102** has first end **104** and second end **106**. First end **104** is the input end for airflow, and second end **106** is the output end for airflow in this illustrative example. As depicted, air source **108** is connected to first end **104** of duct system **102**. In this example, air source **108** has a known flow rate.

In this illustrative example, sensor array **110** is physically connected to second end **106** of duct system **102**. Sensor array **110** is configured to measure the velocity of the airflow at different locations at second end **106**. Sensor array **110** measures the velocity of the airflow at second end **106**, while air source **108** generates the airflow at first end **104**.

Sensor array **110** is also in communication with computer **112**. Sensor array **110** sends data generated from the measurements of the velocity of the airflow at second end **106**. Computer **112** is configured to generate a profile for the velocity of the airflow as measured at second end **106**. This profile may be used to identify the accuracy of a sensor within duct system **102**.

Turning now to **Figure 2**, an illustration of a block diagram of a velocity mapping environment is depicted in accordance with an illustrative embodiment. In this illustrative example, velocity mapping environment **100** in **Figure 1** is an example of one implementation of velocity mapping environment **200** shown in block form in **Figure 2**.

As depicted, velocity mapping environment **200** includes velocity mapping system **202**. Velocity mapping system **202** comprises sensor system **204**, airflow mapper **206**, and display system **208**.

Sensor system **204** is hardware, in this illustrative example, and takes the form of sensor array **210**. Each sensor in sensor array **210** may measure the velocity of the airflow for a particular location. Sensor array **210** may be, for example, without limitation, a sensor array selected from at least one of pitot tubes, pressure gauges, anemometers, gas turbines, laser doppler flow meters, and other suitable types of sensors.

As used herein, the phrase "at least one of", when used with a list of items, means different combinations of one or more of the listed items may be used and only one of each item in the list may be needed. For example, "at least one of item A, item B, and item C" may include, without limitation, item A or item A and item B. This example also may include item A, item B, and item C, or item B and item C.

As depicted, sensor array **210** comprises sensors **250** and frame **252**. Sensors **250** are associated with frame **252**. Frame **252** is a planar frame in this illustrative example. Frame **252** may be, for example, without limitation, concentric circles, a grid, or some other suitable form. Frame **252** is configured to be connected to a location in duct system **216**. Frame **252** may have a shape that corresponds or conforms to the shape of duct system **216** in a location in which sensor array **210** is

placed. In other words, frame **252** may have a shape that corresponds to a shape of a cross section in duct system **216**. This shape may be, for example, circular, oval, or some other suitable shape, depending on the cross-sectional shape of the duct.

Sensors **250** are associated with frame **252** and may be arranged in different configurations. For example, sensors **250** may be arranged in a grid, concentric circles, or in some other arrangement on frame **252**.

Airflow mapper **206** may take the form of hardware, software, or a combination of the two. When software is used, the operations performed by the components may be implemented in the program code configured to be run on a processor unit. When hardware is employed, the hardware may include circuits that operate to perform the operations in the components.

In the illustrative examples, the hardware may take the form of a circuit system, an integrated circuit, an application specific integrated circuit (ASIC), a programmable logic device, or some other suitable type of hardware configured to perform a number of operations. With a programmable logic device, the device is configured to perform the number of operations. The device may be reconfigured at a later time or may be permanently configured to perform the number of operations. Examples of programmable logic devices include, for example, a programmable logic array, a programmable array logic, a field programmable logic array, a field programmable gate array, and other suitable hardware devices.

In this illustrative example, airflow mapper **206** may be implemented in computer system **212**. Computer system **212** is a number of computers. As used herein, a "number of", when used with reference to items, means one or more items. For example, a number of computers is one or more computers. When more than one computer is present in computer system **212**, those computers may be in communication with each other over a communications media, such as a network.

Display system **208** is a hardware system and is comprised of a number of display devices. Display system **208** is connected to airflow mapper **206** and is part of computer system **212** in this illustrative example.

In this illustrative example, velocity mapping system **202** is used to analyze airflow **214** in duct system **216**. In particular, velocity mapping system **202** may be used to map velocity **218** of airflow **214** in duct system **216**.

In this illustrative example, duct system **216** is comprised of number of ducts **220**. When more than one duct is present in number of ducts **220**, these ducts may be connected to each other in different configurations such that duct system **216** has first end **222** and second end **224**.

In mapping velocity **218** of airflow **214** of duct system **216**, first end **222** of duct system **216** is connected to air source **226**. Air source **226** generates airflow **214** at first end **222** with known velocity **228**.

Sensor system **204** is placed in location **230** of duct system **216**. Location **230** may be a number of different locations. For example, location **230** may be at the output of duct system **216** at second end **224**. Location **230** also may be some location between first end **222** and second end **224**. In some cases, location **230** may even be first end **222**.

Sensor system **204** is configured to generate data **232** as sensor system **204** measures airflow **214** passing sensor system **204**. In this illustrative example, sensor system **204** measures the various values for velocity **218** of airflow that may occur across cross section **234** of duct system **216**. In other words, the velocity **218** may have different values at different locations on cross section **234.** Cross section **234** may be a plane in duct system **216** through which airflow **214** passes.

Data **232** generated from these measurements by sensor system **204** is sent to airflow mapper **206**. Airflow mapper **206** uses data **232** to generate profile **236** for duct system **216** at location **230**.

In generating profile **236**, data **232** may only be for portions **238** in cross section **234** of duct system **216**. As a result, data **232** may be missing for other portions of cross section **234**, and profile **236** may not be as complete as desired. In these illustrative examples, airflow mapper **206** is configured to generate data **232** for missing portions **240** in cross section **234**.

In these illustrative examples, the measurements made by sensor system **204** occur continuously for a period of time. As time passes, velocity **218** of airflow **214** through cross section **234** may change within portions **238** as measured by sensor system **204**. These changes in measurements result in the generation of new data **242** by sensor system **204**. New data **242** is sent to airflow mapper **206**.

Airflow mapper **206** updates profile **236**. As a result, profile **236** may include sets of data **244** for different points in space and time. Thus, profile **236** comprises a number of sets of data **244** in which a set of data in the number of sets of data **244** represents velocity **218** of airflow **214** across cross section **234** of duct system **216** for a point in time.

In the illustrative examples, airflow mapper **206** may display profile **236** on display system **208**. In these illustrative examples, the display of profile **236** on display system **208** may take the form of map **247**. Map **247** may graphically indicate velocity **218** of airflow **214** for cross section **234** of duct system **216** in location **230**. The display of velocity **218** for cross section **234** of duct system **216** in map **247** may change as velocity **218** changes in different sets of data in sets of data **244**.

Further, profile **236** may be saved in duct velocity profile database **248**. Duct velocity profile database **248** is a database of profiles of different duct systems. This database may be used to select duct systems when designing a platform. Duct velocity profile database **248** also may be used to make changes to designs for duct systems. For example, locations of sensors in a duct system may be selected using duct velocity profile database **248**. Further, duct velocity profile database **248** also may be used to perform simulations of duct systems.

The illustration of velocity mapping environment **200** in **Figure 2** is not meant to imply physical or architectural limitations to the manner in which an illustrative embodiment may be implemented. Other components in addition to or in place of the ones illustrated may be used. Some components may be unnecessary. Also, the blocks are presented to illustrate some functional components. One or more of these blocks may be combined, divided, or combined and divided into different blocks when implemented in an illustrative embodiment.

For example, duct system **216** may have more than two ends in some illustrative examples. For example, duct system **216** may have two different outputs and one input. In this example, velocity **218** of airflow **214** may be measured for both of the outputs.

In another illustrative example, sensor system **204** may include one or more arrays of sensors in addition to sensor array **210**. These additional arrays of sensors may be placed in other locations in addition to location **230** in duct system **216**.

With reference next to **Figure 3**, an illustration of a block diagram of a profile is depicted in accordance with an illustrative embodiment. Profile **300** is an example of one implementation for profile **236** in **Figure 2**.

As depicted, profile **300** includes identifier **301**, sets of data **302,** and sets of locations **304**. Identifier **301** identifies the duct system for which profile **300** was generated.

Sets of data **302** comprise data for the velocity of the airflow measured at a particular location in a duct system. Each set of data in sets of data **302** is data about the velocity of the airflow for a particular point in time. In other words, sets of data **302** represent the velocity of the airflow for a cross section for different periods of time.

Each set of locations in sets of locations **304** corresponds to a set of data in sets of data **302**. For example, set of locations **306** in sets of locations **304** corresponds to set of data **308** in sets of data **302**. As depicted, set of data **308** is comprised of data points **310**. Data points **310** may be data generated by measurements of the velocity of the airflow or through interpolation of other data points in data points **310**.

In these illustrative examples, each data point in data points **310** corresponds to a location in set of locations **306**. In other words, each location in set of locations **306** identifies a location for a data point. In these illustrative examples, the locations are for a cross section in the duct system. This correspondence of locations to data points forms a map of the various velocities, for example, of the airflow across a cross section in a duct system.

In these illustrative examples, a data point in data points **310** is a percentage of a reference value. In this illustrative example, the reference value is the maximum air velocity. The maximum air velocity is the maximum air velocity as measured by the sensor array at a point in time.

For example, the sensors in the sensor array may be queried for a reading at the same time. The data for these readings are sent to airflow mapper **206** in **Figure 2**. Airflow mapper **206** uses this data to identify the maximum air velocity. In these examples, the maximum air velocity is the highest velocity from the data received from the sensors in sensor array **210** in **Figure 2** for that reading.

Additionally, airflow mapper **206** may also generate all of the points in data points **310** from each velocity read by each sensor in sensor array **210** as a percentage of that maximum. This percentage is calculated for any interpolated data points in data points **310**. When sensor array **210** is queried again for new data, a new maximum velocity is measured.

Although the maximum air velocity is used as the reference value, other values may be used. For example, other reference values may be, for example, without limitation, the desired velocity, known velocity **228** in **Figure 2**, a value representing a design limit, and other suitable values. In other illustrative examples, the data point may be the velocity measured or interpolated for the location.

The illustration of profile **300** in **Figure 3** is not meant to limit the manner in which profiles may be generated by airflow mapper **206** in **Figure 2**. For example, although more than one set of data is illustrated in profile **300**, other profiles may only include one set of data.

Turning now to **Figure 4**, an illustration of a block diagram of a design environment is depicted in accordance with an illustrative embodiment. In this illustrative example, design environment **400** includes designer **402**. Designer **402** is configured to generate platform design **404**. Platform design **404** may be, for example, without limitation, a design for an aircraft.

Designer **402** is implemented in hardware, software, or a combination of the two. Designer **402** is implemented in computer system **406** in this illustrative example. Computer system **406** is comprised of one or more computers.

As depicted, designer **402** may design environmental control system **408** for platform design **404**. Designer **402** also may design air handling system **410**. Air handling system **410** includes duct system **412**.

In these illustrative examples, duct system **412** may be selected from duct systems library **414**. Duct systems library **414** comprises designs **416** and profiles **418** for duct systems **420**. In these illustrative examples, duct systems library **414** may be generated using information from duct velocity profile database **248** in **Figure 2**. Profiles **418** are profiles for duct systems analyzed using velocity mapping system **202** in velocity mapping environment **200** in **Figure 2**. Designs **416** are designs for the duct systems.

Further, designer **402** also may run simulation **422** for duct system **424** selected from duct systems **420** in duct systems library **414**. This simulation may be performed to determine how duct system **424** will behave in platform design **404**. The simulation may be performed using the design and profile associated with duct system **424** in duct systems library **414**.

The illustration of design environment **400** is not meant to imply physical or architectural limitations to the manner in which an illustrative embodiment may be implemented. For example, without limitation, platform design **404** may be for an automobile, a building, a ship, or some other suitable platform in addition to or in place of an aircraft. Further, designer **402** also may be configured to combine duct systems within duct systems library **414** to form a new duct system. The simulation of the new duct system may be performed using the designs and profiles for the duct systems combined into the new duct system.

Turning now to **Figure 5**, an illustration of a flowchart of a process for analyzing airflow in a duct system is depicted in accordance with an illustrative embodiment. The process illustrated in **Figure 5** may be implemented in velocity

mapping environment **200** in **Figure 2**. In particular, the process may be implemented using velocity mapping system **202**.

The process begins by generating data about a velocity of airflow for a location in a duct system (operation **500**). The duct system may be duct system **216** in **Figure 2**. The data is generated by a sensor system, such as sensor system **204** in **Figure 2**. A profile is generated of the velocity of the airflow at the location (operation **502**). The profile includes sets of data for each point in time at which data is generated for the location in the duct system.

The process displays a map of the velocity of the airflow using the profile (operation **504**). The map is displayed on a display system, such as display system **208** in **Figure 2**. This map is a graphical indication of the set of data processed in operation **502**.

The process waits for new data to be generated by the sensor system (operation **506**). When new data is generated, the process updates the profile with the new data (operation **508**). Thereafter, the process updates the map displayed on the display system (operation **510**). The process then returns to operation **506** as described above. This process may continue until terminated.

The flowchart and block diagrams in the different depicted embodiments illustrate the architecture, functionality, and operation of some possible implementations of apparatuses and methods in an illustrative embodiment. In this regard, each block in the flowchart or block diagrams may represent a module, segment, function, and/or a portion of an operation or step. For example, one or more of the blocks may be implemented as program code, in hardware, or a combination of the program code and hardware. When implemented in hardware, the hardware may, for example, take the form of integrated circuits that are manufactured or configured to perform one or more operations in the flowchart or block diagrams.

In some alternative implementations of an illustrative embodiment, the function or functions noted in the blocks may occur out of the order noted in the figures. For example, in some cases, two blocks shown in succession may be executed substantially concurrently, or the blocks may sometimes be performed in the reverse

order, depending upon the functionality involved. Also, other blocks may be added in addition to the illustrated blocks in a flowchart or block diagram.

Turning now to **Figure 6**, an illustration of a map is depicted in accordance with an illustrative embodiment. Map **600** is an example of one implementation of map **247** displayed on display system **208** in **Figure 2**.

In this illustrative example, map **600** indicates a velocity of the airflow for a cross section in a duct system. This cross section may be at the output, at the input, or at some other location in the duct system.

As depicted, map **600** is displayed with respect to vertical axis **602** and horizontal axis **604**. In particular, the different data points in map **600** are displayed with respect to vertical axis **602** and horizontal axis **604** to identify the location of the data points in map **600**.

In this illustrative example, the data points take the form of a percentage. The percentage is a percentage of the maximum velocity of the airflow exiting the duct system at a point in time. In these illustrative examples, the different values may be represented in a number of different ways. For example, different values for the data points may be represented using different colors, grayscale, and other suitable graphical identifiers.

With reference now to **Figure 7**, an illustration of a map is depicted in accordance with an illustrative embodiment. Map **700** is another example of map **247** displayed on display system **208** in **Figure 2.** In this illustrative example, map **700** takes the form of a three-dimensional map. Data points in map **700** are displayed with respect to vertical axis **702**, horizontal axis **704**, and value axis **706**. Vertical axis **702** and horizontal axis **704** represent a location data in two-dimensional space. Some of the data points are from sensors, while other data points may be interpolated values. Value axis **706** represents the percentage of the velocity of airflow.

In this illustrative example, data points in map **700** are displayed with respect to vertical axis **702** and horizontal axis **704**. As a result, the location of a data point indicates a location with respect to a cross section of the duct system. The data

points are also displayed with respect to value axis **706**. This axis provides an indication of the percentage for the data points.

The illustrations of map **600** in **Figure 6** and map **700** in **Figure 7** are not meant to limit the manner in which maps may be displayed. For example, the different axes may represent coordinates in a coordinate system with respect to a model of the duct system. In other illustrative examples, the display of these maps may be dynamic. For example, the maps may display multiple sets of data in a profile or may display data as new data is received from a sensor system.

Turning now to **Figure 8**, an illustration of a data processing system is depicted in accordance with an illustrative embodiment. Data processing system **800** may be used to implement computer **112** in **Figure 1**, one or more computers in computer system **212** in **Figure 2**, and one or more computers in computer system **406** in **Figure 4**. In this illustrative example, data processing system **800** includes communications framework **802**, which provides communications between processor unit **804**, memory **806**, persistent storage **808**, communications unit **810**, input/output (I/O) unit **812**, and display **814**. In this example, communications framework **802** may take the form of a bus system.

Processor unit **804** serves to execute instructions for software that may be loaded into memory **806**. Processor unit **804** may be a number of processors, a multi-processor core, or some other type of processor, depending on the particular implementation.

Memory **806** and persistent storage **808** are examples of storage devices **816**. A storage device is any piece of hardware that is capable of storing information, such as, for example, without limitation, data, program code in functional form, and/or other suitable information either on a temporary basis and/or a permanent basis. Storage devices **816** may also be referred to as computer readable storage devices in these illustrative examples. Memory **806**, in these examples, may be, for example, a random access memory or any other suitable volatile or non-volatile storage device. Persistent storage **808** may take various forms, depending on the particular implementation.

For example, persistent storage **808** may contain one or more components or devices. For example, persistent storage **808** may be a hard drive, a flash memory, a rewritable optical disk, a rewritable magnetic tape, or some combination of the above. The media used by persistent storage **808** also may be removable. For example, a removable hard drive may be used for persistent storage **808**.

Communications unit **810**, in these illustrative examples, provides for communications with other data processing systems or devices. In these illustrative examples, communications unit **810** is a network interface card.

Input/output unit **812** allows for input and output of data with other devices that may be connected to data processing system **800**. For example, input/output unit **812** may provide a connection for user input through a keyboard, a mouse, and/or some other suitable input device. Further, input/output unit **812** may send output to a printer. Display **814** provides a mechanism to display information to a user.

Instructions for the operating system, applications, and/or programs may be located in storage devices **816**, which are in communication with processor unit **804** through communications framework **802**. The processes of the different embodiments may be performed by processor unit **804** using computer-implemented instructions, which may be located in a memory, such as memory **806**.

These instructions are referred to as program code, computer usable program code, or computer readable program code that may be read and executed by a processor in processor unit **804**. The program code in the different embodiments may be embodied on different physical or computer readable storage media, such as memory **806** or persistent storage **808**.

Program code **818** is located in a functional form on computer readable media **820** that is selectively removable and may be loaded onto or transferred to data processing system **800** for execution by processor unit **804**. Program code **818** and computer readable media **820** form computer program product **822** in these illustrative examples. In one example, computer readable media **820** may be computer readable storage media **824** or computer readable signal media **826**.

In these illustrative examples, computer readable storage media **824** is a physical or tangible storage device used to store program code **818** rather than a medium that propagates or transmits program code **818.**

Alternatively, program code **818** may be transferred to data processing system **800** using computer readable signal media **826**. Computer readable signal media **826** may be, for example, a propagated data signal containing program code **818**. For example, computer readable signal media **826** may be an electromagnetic signal, an optical signal, and/or any other suitable type of signal. These signals may be transmitted over communications links, such as wireless communications links, optical fiber cable, coaxial cable, a wire, and/or any other suitable type of communications link.

The different components illustrated for data processing system **800** are not meant to provide architectural limitations to the manner in which different embodiments may be implemented. The different illustrative embodiments may be implemented in a data processing system including components in addition to and/or in place of those illustrated for data processing system **800**. Other components shown in **Figure 8** can be varied from the illustrative examples shown. The different embodiments may be implemented using any hardware device or system capable of running program code **818**.

Illustrative embodiments of the disclosure may be described in the context of aircraft manufacturing and service method **900** as shown in **Figure 9** and aircraft **1000** as shown in **Figure 10**. Turning first to **Figure 9**, an illustration of an aircraft manufacturing and service method is depicted in accordance with an illustrative embodiment. During pre-production, aircraft manufacturing and service method **900** may include specification and design **902** of aircraft **1000** in **Figure 10** and material procurement **904**.

During production, component and subassembly manufacturing **906** and system integration **908** of aircraft **1000** takes place. Thereafter, aircraft **1000** may go through certification and delivery **910** in order to be placed in service **912**. While in service **912** by a customer, aircraft **1000** is scheduled for routine maintenance and

service **914**, which may include modification, reconfiguration, refurbishment, and other maintenance or service.

Each of the processes of aircraft manufacturing and service method **900** may be performed or carried out by a system integrator, a third party, and/or an operator. In these examples, the operator may be a customer. For the purposes of this description, a system integrator may include, without limitation, any number of aircraft manufacturers and major-system subcontractors; a third party may include, without limitation, any number of vendors, subcontractors, and suppliers; and an operator may be an airline, a leasing company, a military entity, a service organization, and so on.

With reference now to **Figure 10**, an illustration of an aircraft is depicted in which an illustrative embodiment may be implemented. In this example, aircraft **1000** is produced by aircraft manufacturing and service method **900** in **Figure 9** and may include airframe **1002** with plurality of systems **1004** and interior **1006**. Examples of systems **1004** include one or more of propulsion system **1008**, electrical system **1010**, hydraulic system **1012**, and environmental system **1014**. Any number of other systems may be included. Although an aerospace example is shown, different illustrative embodiments may be applied to other industries, such as the automotive industry.

Apparatuses and methods embodied herein may be employed during at least one of the stages of aircraft manufacturing and service method **900** in **Figure 9**. For example, velocity mapping system **202** in **Figure 2** may be used to generate profiles of duct systems, which may be used to select duct systems for aircraft **1000** during specification and design **902**. As another illustrative example, profiles generated using velocity mapping system **202** also may be used in maintenance and service **914** to select duct systems during rework and upgrades of air distribution systems in aircraft **1000**. The use of a number of the different illustrative embodiments may substantially expedite the assembly of and/or reduce the cost of aircraft **1000**.

In the figures and the text, in one aspect, a velocity mapping system **202** is disclosed including

a sensor system **204** configured to generate data **232** about a velocity **218** of airflow **214** for a location **230** in a duct system **216**; and an airflow mapper **206** configured to receive the data **232** from the sensor system **204** and generate a profile **236** of the velocity **218** of the airflow **214** at the location in the duct system **216**.

In one variant, the velocity mapping system **202** includes wherein the profile **236** includes a number of sets of data **244** in which a set of data in the number of sets of data **244** represents one or more velocities of airflow found across a cross section **234** of the duct system **216** for a point in time. In another variant, the velocity mapping system includes wherein airflow mapper **206** is configured to update the profile **236** as the data **232** about the velocity **218** of the airflow **214** changes; wherein each update of the profile **236** forms a new set of data in the number of sets of data **244** in the profile **236**. In yet another variant, the velocity mapping system **202** further includes wherein the data **232** is for portions **238** of a cross section **234** of the duct system **216** at the location **230**.

In one example, the velocity mapping system **202** includes wherein the airflow mapper **206** is configured to interpolate the data **232** for missing portions **240** of the cross section **234** of the duct system **216**. In yet another example, the velocity mapping system **202** further includes a display system **208**, wherein the airflow mapper **206** is configured to display the profile **236** on the display system **208**.

In one instance, the velocity mapping system **202** of further includes: an air source **226** configured to be connected to an input end of the duct system **216** and generate the airflow **214** in the duct system **216**; wherein the airflow **214** generated by the air source **226** has a known flow rate. In another instance, the velocity mapping system **202** includes wherein the profile **236** includes data points **310** in which a data point in the data points **310** is a percentage of a maximum air velocity. In another instance, the velocity mapping system **202** includes wherein the sensor system (**204**) comprises: a sensor array (**210**) configured to measure the velocity (**218**) of the airflow (**214**) and generate the data (**232**) from measuring the velocity (**218**) of the airflow (**214**).

In still another instance, the velocity mapping system **202** includes wherein the airflow mapper includes:

a processor unit **804**; a storage device; and program code **218** stored on the storage device, wherein the processor unit **804** is configured to run the program code **218** to receive the data **232** from the sensor system **204** and generate the profile **236** of the velocity **218** of the airflow **214** at the location **230** in the duct system **216**. In yet another instance, the velocity mapping system **202** includes wherein the duct system **216** is for a platform selected from one of a mobile platform, a stationary platform, a land-based structure, an aquatic-based structure, a space-based structure, an aircraft, a surface ship, a tank, a personnel carrier, a train, a spacecraft, a space station, a satellite, a submarine, an automobile, a power plant, a bridge, a dam, a manufacturing facility, and a building.

In one aspect, a method is disclosed for analyzing airflow **214** in a duct system **216**, the method includes: generating data **232** about a velocity **218** of the airflow **214** for a location **230** in the duct system **216**; and generating a profile **236** of the velocity **218** of the airflow **214** at the location **230**. In one variant, the method includes wherein the profile **236** includes a number of sets of data **244** in which a set of data in the number of sets of data **244** represents one or more velocities of airflow found across a cross section **234** of the duct system **216** for a point in time. In another variant, the method further includes: updating the profile **236** as the data **232** about the velocity **218** of the airflow **214** changes. In another variant, the method includes wherein an update to the profile **236** forms a new set of data in the number of sets of data **244** in the profile **236**. In yet another variant, the method includes wherein the data **232** is for portions **238** of a cross section **234** of the duct system **216** at the location **230** and further including: interpolating the data **232** for missing portions **240** of the portions **238** of the cross section **234** of the duct system **216**.

In still another variant, the method further includes: displaying the profile **236** on a display system **208**. In one example, the method includes wherein the profile **236** comprises data points **310** in which a data point in the data points **310** is a

percentage of a maximum air velocity. In yet another example, the method further includes storing the profile **236** in a library of profiles for a plurality of duct systems.

The description of the different illustrative embodiments has been presented for purposes of illustration and description and is not intended to be exhaustive or limited to the embodiments in the form disclosed. Many modifications and variations will be apparent to those of ordinary skill in the art. Further, different illustrative embodiments may provide different features as compared to other desirable embodiments. The embodiment or embodiments selected are chosen and described in order to best explain the principles of the embodiments, the practical application, and to enable others of ordinary skill in the art to understand the disclosure for various embodiments with various modifications as are suited to the particular use contemplated.

EMBODIMENTS IN WHICH AN EXCLUSIVE PROPERTY OR PRIVILEGE IS CLAIMED ARE DEFINED AS FOLLOWS:

1. A velocity mapping system comprising:

a sensor system configured to generate data about a velocity of airflow for a location in a duct system; and

an airflow mapper configured to receive the data from the sensor system and generate a profile of the velocity of the airflow at the location in the duct system;

an air source configured to be connected to an input end of the duct system and generate the airflow in the duct system; wherein the airflow generated by the air source has a known flow rate; wherein the profile comprises data points in which a data point in the data points is a percentage of a maximum air velocity;

a duct velocity profile database, wherein the duct velocity profile database is a database of profiles of different duct systems, and wherein the profile may be saved in the duct velocity database; and

wherein the sensor system comprises a sensor array configured to measure the velocity of the airflow and generate the data from measuring the velocity of the airflow, wherein the sensor array comprises sensors and a frame having a shape that corresponds to a shape of a cross-section in the duct system, wherein the sensors are arranged in a grid on the frame.

2. The velocity mapping system of claim **1**, wherein the profile comprises a number of sets of data in which a set of data in the number of sets of data represents one or more velocities of airflow found across the cross-section of the duct system for a point in time.

3. The velocity mapping system of claim **2**, wherein the airflow mapper is configured to update the profile as the data about the velocity of the airflow changes.

4. The velocity mapping system of claim **3**, wherein each update of the profile forms a new set of data in the number of sets of data in the profile.

5. The velocity mapping system of any one of claims **1** - **4**, wherein the data is for portions of the cross-section of the duct system at the location and the airflow mapper is configured to interpolate the data for missing portions of the cross-section of the duct system.

6. The velocity mapping system of any one of claims **1** - **5** further comprising:

a display system, wherein the airflow mapper is configured to display the profile on the display system.

7. The velocity mapping system of any one of claims **1** - **6**, wherein the profile comprises data points in which a data point in the data points is a percentage of a maximum air velocity.

8. The velocity mapping system of claim **1**, wherein the airflow generated by the air source has a known flow rate.

9. The velocity mapping system of any one of claims **1** - **8**, wherein the airflow mapper comprises:

a processor unit;

a storage device; and

program code stored on the storage device, wherein the processor unit is configured to run the program code to receive the data from the

sensor system and generate the profile of the velocity of the airflow at the location in the duct system.

10. The velocity mapping system of any one of claims **1** - **9**, wherein the duct system is for a platform selected from one of a mobile platform, a stationary platform, a land-based structure, an aquatic-based structure, a space-based structure, an aircraft, a surface ship, a tank, a personnel carrier, a train, a spacecraft, a space station, a satellite, a submarine, an automobile, a power plant, a bridge, a dam, a manufacturing facility, and a building.

11. A method for analyzing airflow in a duct system, the method comprising:

generating data about a velocity of the airflow for a location in the duct system using a sensor system comprising a sensor array comprising sensors and a frame having a shape that corresponds to a shape of a cross-section in the duct system, wherein the sensors are arranged in a grid on the frame;

generating a profile of the velocity of the airflow at the location; and

displaying the profile on a display system, the profile comprises data points in which a data point in the data points is a percentage of a maximum air velocity; and

storing the profile in a library of profiles for a plurality of duct systems.

12. The method of claim **11**, wherein the profile comprises a number of sets of data in which a set of data in the number of sets of data represents one or more velocities of airflow found across the cross-section of the duct system for a point in time.

13. The method of claim **12** further comprising updating the profile as the data about the velocity of the airflow changes.

14. The method of claim **13**, wherein an update to the profile forms a new set of data in the number of sets of data in the profile.

15. The method of any one of claims **11** - **14**, wherein the data is for portions of the cross-section of the duct system at the location and further comprising:

interpolating the data for missing portions of the portions of the cross-section of the duct system.

16. The velocity mapping system of any one of claims **1** to **10**, wherein the duct system comprises a plurality of ducts that are connected to each other;

wherein the duct system has a first end and a second end;

wherein the first end is the input end for the airflow, and the second end is an output end for the airflow;

wherein the sensor array is physically connected to the second end of the duct system;

wherein the sensor array is configured to measure the velocity of the airflow at different locations at the second end of the duct system;

wherein the sensor array measures the velocity of the airflow at the second end while the air source generates the airflow at the first end;

wherein the sensor array is in communication with a computer system of the airflow mapping system;

wherein the sensor array sends data generated from measurements of the velocity of the airflow at the second end of the duct system;

wherein the profile is used to identify an accuracy of a sensor of the sensor array within the duct system;

wherein each sensor in the sensor array measures a velocity of the airflow for a particular location of a cross-section of the duct system where the sensor array is placed;

wherein the sensor array comprises one or more of a pitot tube and a gas turbine;

wherein the frame is a planar frame that comprises one of concentric circles and a grid;

wherein the frame is configured to be connected to the location in the duct system; and

wherein the shape of the frame depends on a cross-sectional shape of the duct system in the location in the duct system.

17. The method of any one of claims **11** – **15**,

wherein the duct system comprises a plurality of ducts that are connected to each other;

wherein the duct system has a first end and a second end;

wherein the first end is an input end for the airflow, and the second end is an output end for the airflow;

wherein the sensor array is physically connected to the second end of the duct system;

wherein the sensor array is configured to measure the velocity of the airflow at different locations at the second end of the duct system;

wherein the sensor array measures the velocity of the airflow at the second end while the air source generates the airflow at the first end;

wherein the sensor array is in communication with a computer system of the airflow mapping system;

wherein the sensor array sends data generated from measurements of the velocity of the airflow at the second end of the duct system;

wherein the profile is used to identify an accuracy of a sensor of the sensor array within the duct system;

wherein each sensor in the sensor array measures a velocity of the airflow for a particular location of the cross-section of the duct system where the sensor array is placed;

wherein the sensor array comprises one or more of a pitot tube and a gas turbine;

wherein the frame is a planar frame that comprises one of concentric circles and a grid;

wherein the frame is configured to be connected to the location in the duct system; and

wherein the shape of the frame depends on a cross-sectional shape of the duct system in the location in the duct system.

18. A velocity mapping system comprising:

a sensor system configured to generate data about a velocity of airflow for a location in a duct system, wherein the sensor system comprises a sensor array having one or more sensors and a frame that has a shape that corresponds and conforms to a shape of a cross section of the duct system in the location where the sensor array is placed;

an airflow mapper configured to receive the data from the sensor system and generate a profile of the velocity of the airflow at the location in the duct system; and

an air source configured to be connected to an input end of the duct system and generate the airflow in the duct system;

wherein the profile comprises a number of sets of data for different points in space and time, in which a set of data in the number of sets of data represents one or more velocities of airflow found across the cross section of the duct system for a point in time;

wherein the data is for portions of the cross section of the duct system at the location and the airflow mapper is configured to interpolate the data for the portions of the cross section to generate data for missing portions of the cross section of the duct system;

wherein the sensor system measures values for velocity of airflow across the cross section of the duct system;

wherein the sensor system generates the data that is only for the portions in the cross section of the duct system;

wherein the airflow mapper is configured to graphically indicate velocity of airflow for the cross section by displaying the profile on a display system in a form of a map;

wherein the map graphically indicates the velocity of the airflow for the cross section of the duct system in the location;

wherein display of the velocity for the cross section of the duct system in the map changes as the velocity changes in different sets of data in the sets of data, and

wherein the profile comprising the number of sets of data representing the one or more velocities of the airflow found across the cross section of the duct system for different points in space and time is saved in a duct velocity profile database of profiles for different duct systems, whereby the profiles of duct systems generated by the velocity mapping system may be used in maintenance and service of an air distribution system in an aircraft.

19. The velocity mapping system of claim **18**, wherein the airflow mapper is configured to update the profile as the data about the velocity of the airflow changes.

20. The velocity mapping system of claim **19**, wherein each update of the profile forms a new set of data in the number of sets of data in the profile.

21. The velocity mapping system of claim **18**, wherein the profile comprises data points in which a data point in the data points is a percentage of a maximum air velocity.

22. The velocity mapping system of claim **18**, wherein the airflow generated by the air source has a known flow rate.

23. The velocity mapping system of claim **18**, wherein the airflow mapper comprises:

a processor unit;

a storage device; and

program code stored on the storage device, wherein the processor unit is configured to run the program code to receive the data from the sensor system and generate the profile of the velocity of the airflow at the location in the duct system.

24. A method for analyzing airflow in a duct system, the method comprising:

generating, via a sensor system, data about a velocity of the airflow for a location in the duct system, wherein the sensor system comprises a sensor array having one or more sensors and a frame that has a shape that corresponds and conforms to a shape of a cross section of the duct system in the location where the sensor array is placed; and

generating a profile of the velocity of the airflow at the location;

wherein an air source connected to an input end of the duct system generates the airflow in the duct system;

wherein the profile comprises a number of sets of data for different points in space and time, in which a set of data in the number of sets of data represents one or more velocities of airflow found across the cross section of the duct system for a point in time;

wherein the data is for portions of the cross section of the duct system at the location and an airflow mapper is configured to interpolate the data of the portions of the cross section to generate data for missing portions of the cross section of the duct system;

wherein the sensor system measures values for velocity of airflow across the cross section of the duct system;

wherein the sensor system generates the data that is only for the portions in the cross section of the duct system;

wherein the airflow mapper is configured to graphically indicate velocity of airflow for the cross section by displaying the profile on a display system in a form of a map;

wherein the map graphically indicates the velocity of the airflow for the cross section of the duct system in the location;

wherein display of the velocity for the cross section of the duct system in the map changes as the velocity changes in different sets of data in the sets of data; and

wherein the profile comprising the number of sets of data representing the one or more velocities of the airflow found across the cross section of the duct system for different points in space and time is saved in a duct velocity profile database of profiles for different duct systems, whereby the profiles of duct systems generated by the velocity mapping system may be used in maintenance and service of an air distribution system in an aircraft.

25. The method of claim **24** further comprising:

updating the profile as the data about the velocity of the airflow changes.

26. The method of claim **25**, wherein an update to the profile forms a new set of data in the number of sets of data in the profile.

27. The method of claim **24**, wherein the profile comprises data points in which a data point in the data points is a percentage of a maximum air velocity.

28. The method of claim **24** further comprising:

storing the profile in a library of profiles for a plurality of duct systems.

29. The velocity mapping system of claim **18**,

wherein the duct system is comprised of a plurality of ducts that are connected to each other;

wherein the duct system has a first end and a second end;

wherein the first end is the input end for the airflow, and the second end is an output end for the airflow;

wherein the sensor array is physically connected to the second end of the duct system;

wherein the sensor array is configured to measure the velocity of the airflow at different locations at the second end of the duct system;

wherein the sensor array measures the velocity of the airflow at the second end while the air source generates the airflow at the first end;

wherein the sensor array is in communication with a computer system of the airflow mapper;

wherein the sensor array sends data generated from measurements of the velocity of the airflow at the second end of the duct system;

wherein the profile is used to identify an accuracy of a sensor of the sensor array within the duct system;

wherein each sensor in the sensor array measures a velocity of the airflow for a particular location of the cross section of the duct system in the location where the sensor array is placed;

wherein the sensor array comprises one or more of a pitot tube and a gas turbine;

wherein the frame is a planar frame that comprises one of concentric circles and a grid;

wherein the frame is configured to be connected to the location in the duct system;

wherein the shape of the frame depends on a cross-sectional shape of the duct system in the location in the duct system; and

wherein the sensors are associated with the frame and are arranged in one of a grid and concentric circles.

30. The method of claim **24** further comprising:

identifying a location in the cross section of the duct system having a desired velocity of airflow; and

placing a sensor at the identified location.

31. A velocity mapping system comprising:

a sensor system configured to generate data about a velocity of airflow for a location in a duct system, wherein the sensor system comprises a sensor array having one or more sensors and a frame connected to an output of the duct system, wherein the one or more sensors generate the data about the velocity of the airflow, wherein the one or more sensors comprise one or more of a pitot tube or a gas turbine, and wherein the frame has a shape that corresponds and conforms to a shape of a cross section of the duct system in the location where the sensor array is placed;

an airflow mapper configured to receive the data from the sensor system and generate a profile of the velocity of the airflow at the location in the duct system; and

an air source configured to be connected to an input end of the duct system and generate the airflow in the duct system;

wherein the profile comprises a number of sets of data in which a set of data in the number of sets of data represents one or more velocities of airflow found across the cross section of the duct system for a point in time;

wherein the data is for portions of the cross section of the duct system at the location and the airflow mapper is configured to interpolate the data for the portions of the cross section to generate data for missing portions of the cross section of the duct system;

wherein the sensor system measures values for velocity of airflow across the cross section of the duct system;

wherein the sensor system generates the data that is only for the portions in the cross section of the duct system;

wherein the airflow mapper is configured to graphically indicate velocity of airflow for the cross section by displaying the profile on a display system in a form of a map;

wherein the map graphically indicates the velocity of the airflow for the cross section of the duct system in the location;

wherein display of the velocity for the cross section of the duct system in the map changes as the velocity changes in different sets of data in the sets of data; and

wherein the profile comprising the number of sets of data representing the one or more velocities of the airflow found across the cross section of the duct system for different points in space and time is saved in a

duct velocity profile database of profiles for different duct systems, whereby the profiles of duct systems generated by the velocity mapping system may be used in maintenance and service of an air distribution system in an aircraft.

32. The velocity mapping system of claim **31**, wherein the duct system comprises a plurality of ducts connected to one another at the input end and at the output end.

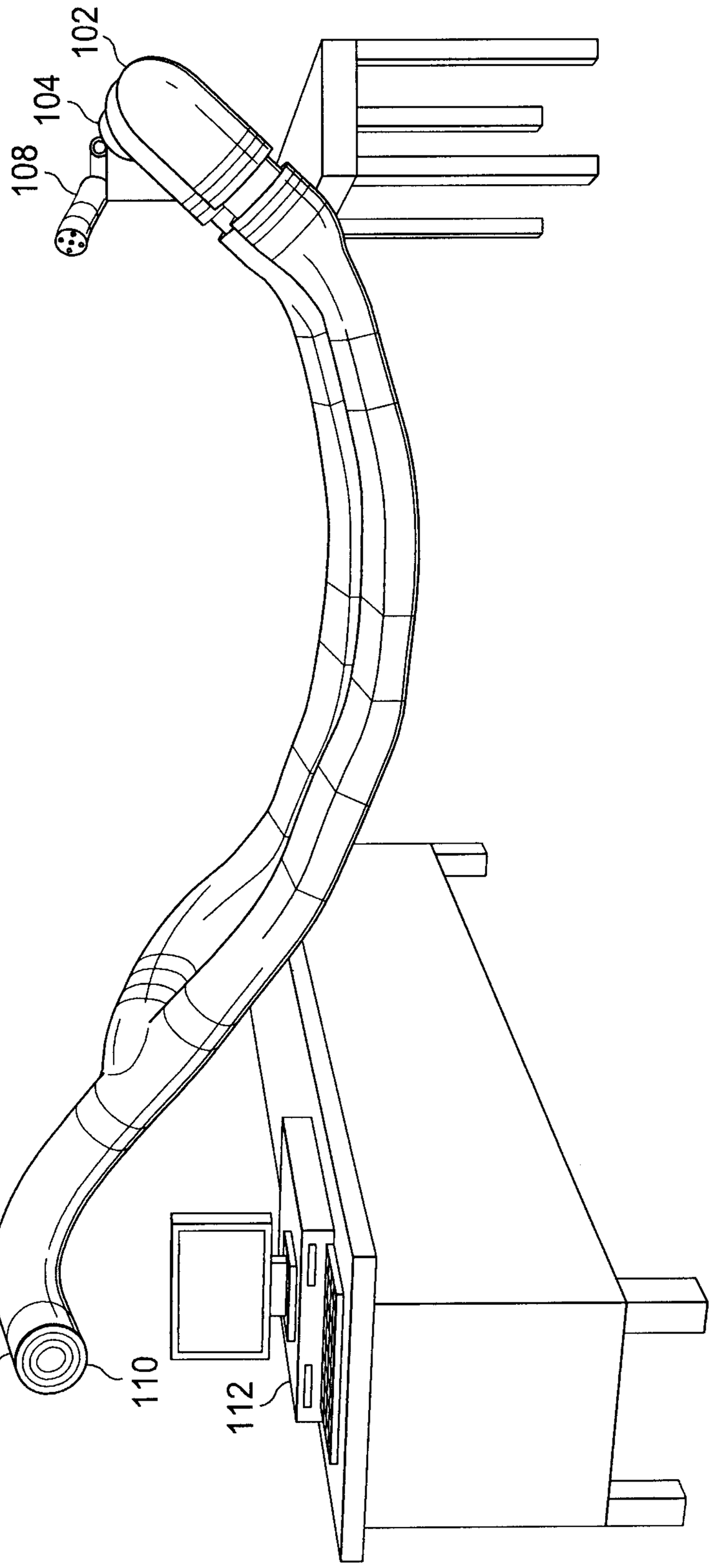

FIG. 1

FIG. 2

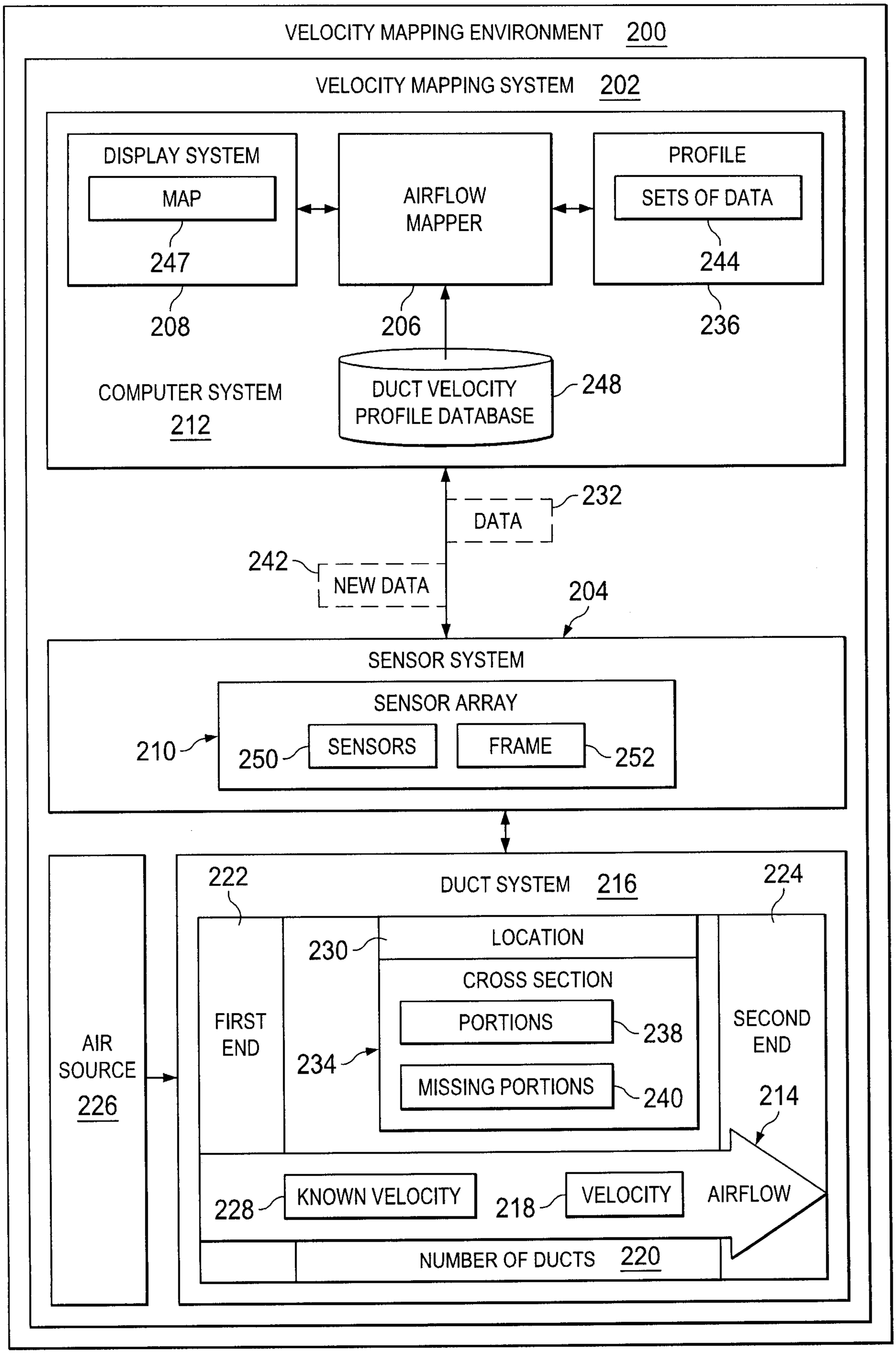
VELOCITY MAPPING ENVIRONMENT 200
VELOCITY MAPPING SYSTEM 202
DISPLAY SYSTEM
MAP
247
208
AIRFLOW MAPPER
206
PROFILE
SETS OF DATA
244
236
COMPUTER SYSTEM 212
DUCT VELOCITY PROFILE DATABASE
248
232
DATA
242
NEW DATA
204
SENSOR SYSTEM
SENSOR ARRAY
210
250
SENSORS
FRAME
252
222
DUCT SYSTEM 216
224
230
LOCATION
CROSS SECTION
PORTIONS
238
234
MISSING PORTIONS
240
FIRST END
SECOND END
214
AIR SOURCE 226
228
KNOWN VELOCITY
218
VELOCITY
AIRFLOW
NUMBER OF DUCTS 220

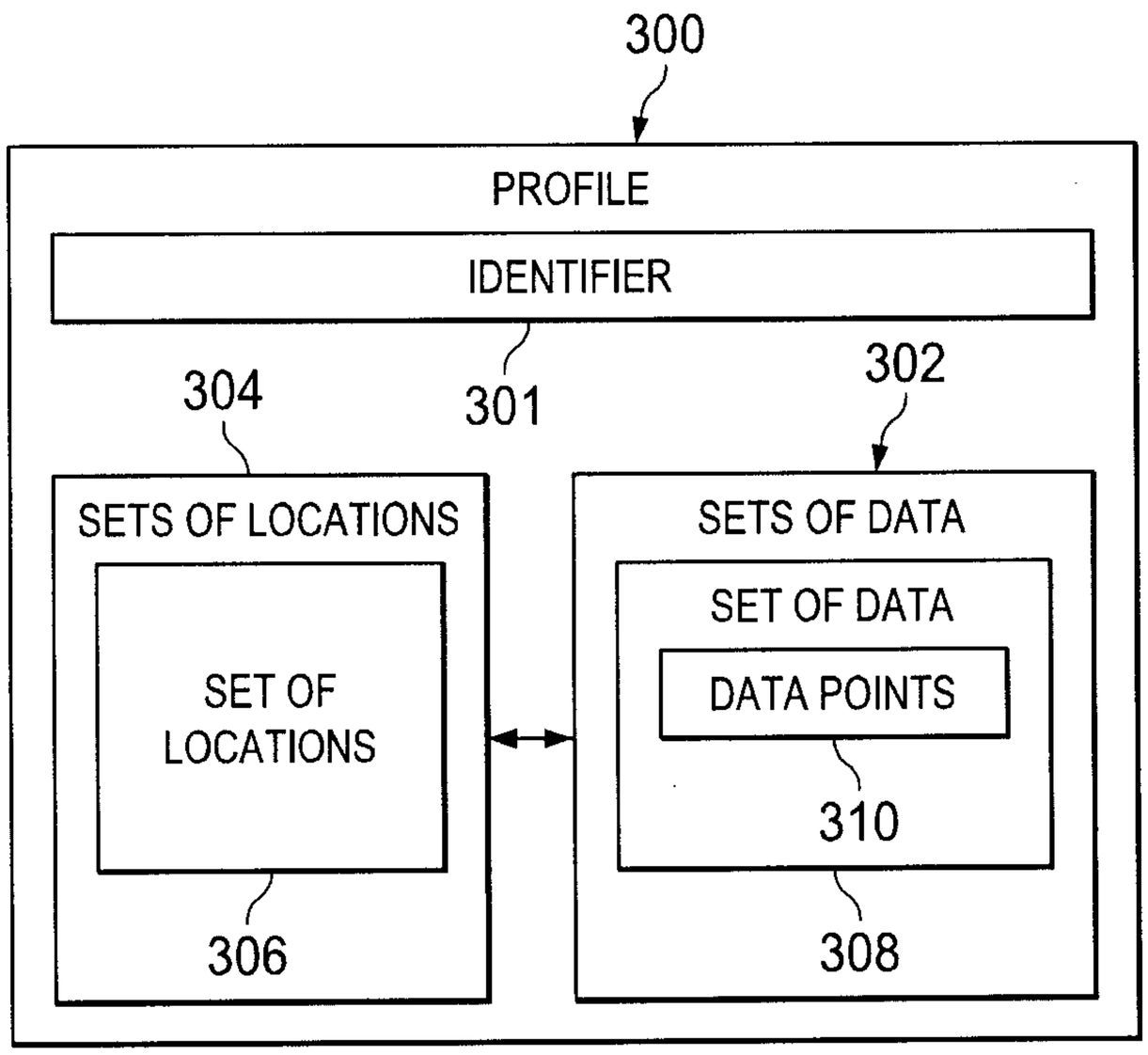
300
PROFILE
IDENTIFIER
301
304
302
SETS OF LOCATIONS
SET OF LOCATIONS
306
SETS OF DATA
SET OF DATA
DATA POINTS
310
308

FIG. 3

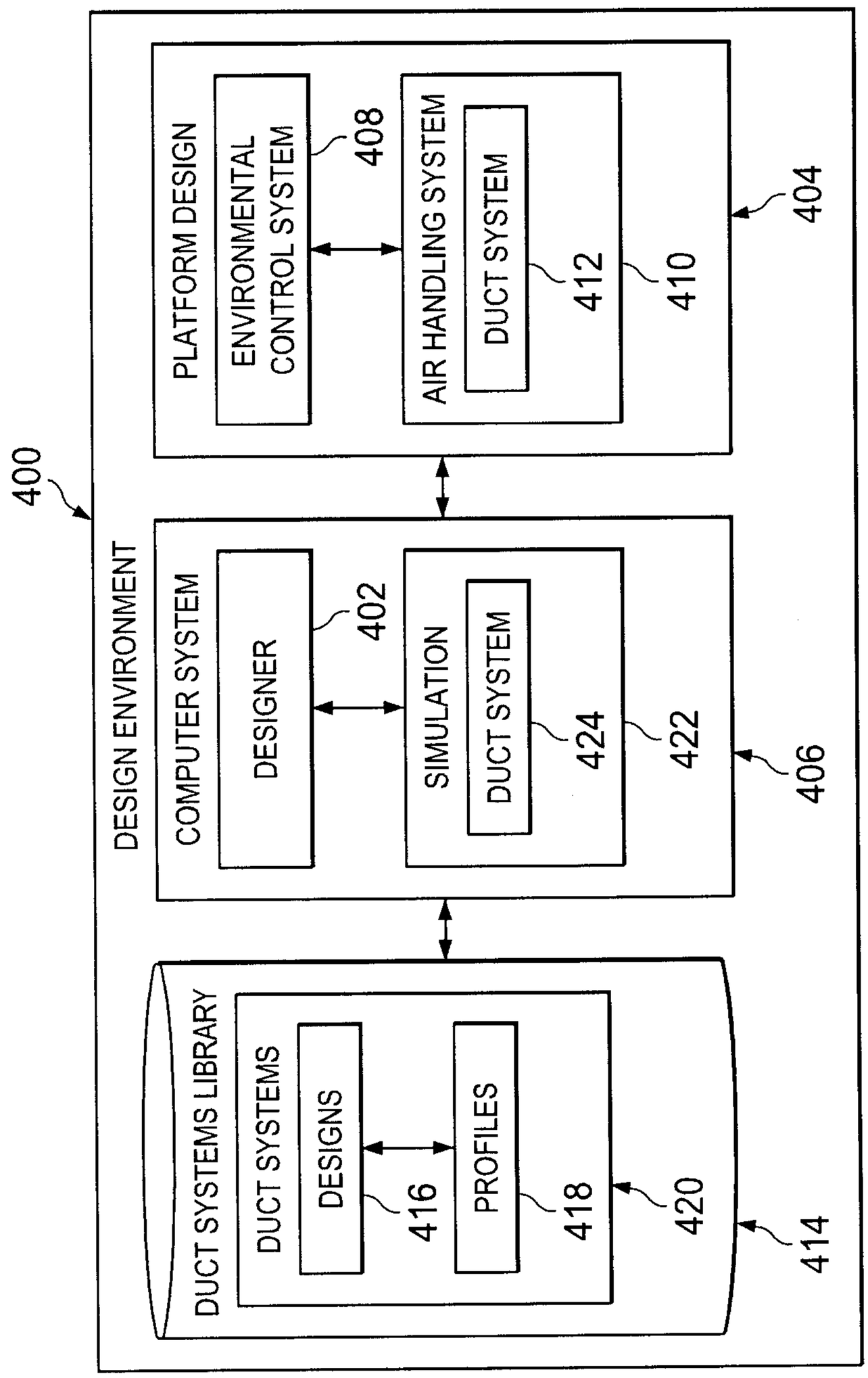
400
DESIGN ENVIRONMENT
COMPUTER SYSTEM
DESIGNER
402
SIMULATION
DUCT SYSTEM
424
422
406
PLATFORM DESIGN
ENVIRONMENTAL CONTROL SYSTEM
408
AIR HANDLING SYSTEM
DUCT SYSTEM
412
410
404
DUCT SYSTEMS LIBRARY
DUCT SYSTEMS
DESIGNS
416
PROFILES
418
420
414

FIG. 4

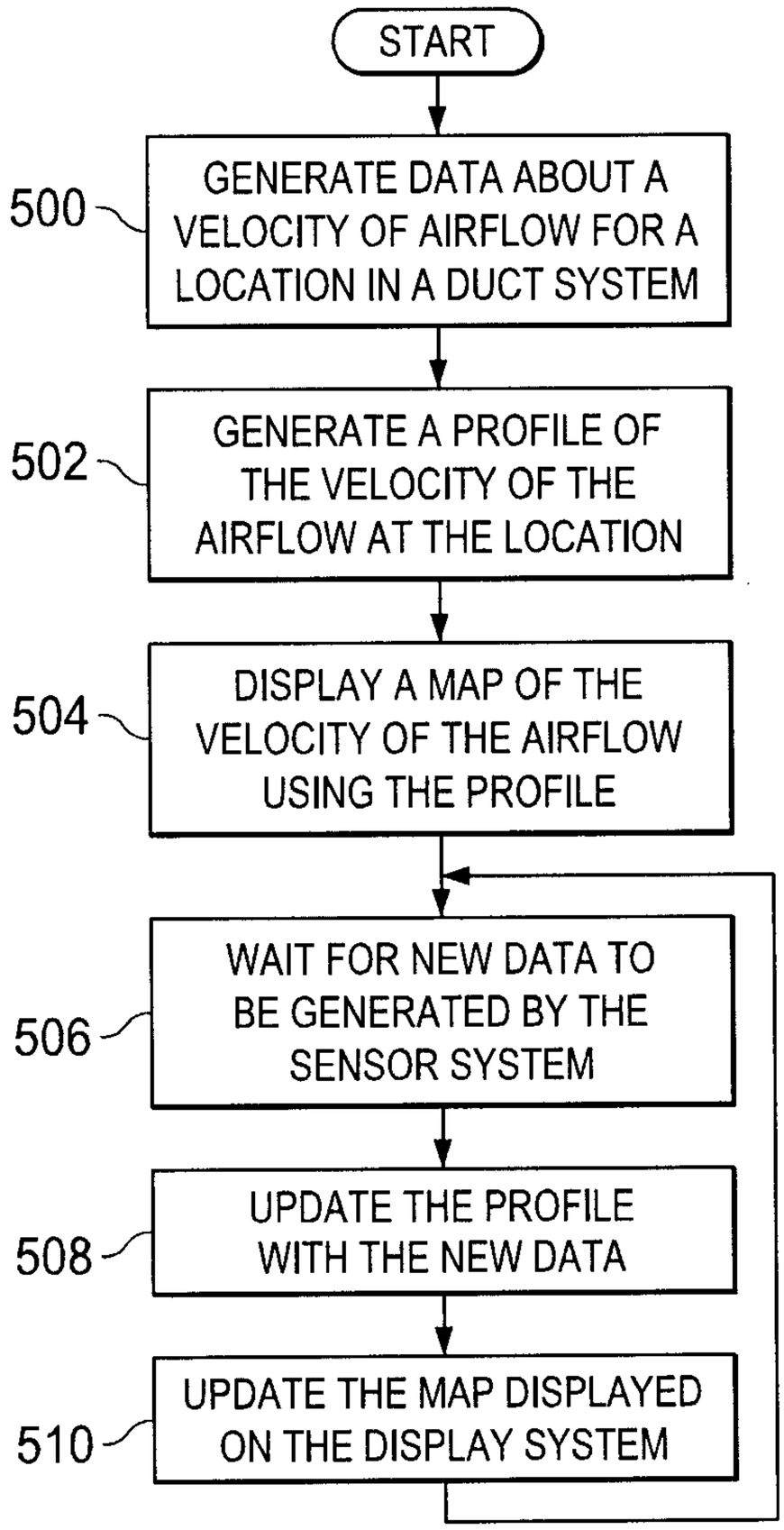
START
500
GENERATE DATA ABOUT A VELOCITY OF AIRFLOW FOR A LOCATION IN A DUCT SYSTEM
502
GENERATE A PROFILE OF THE VELOCITY OF THE AIRFLOW AT THE LOCATION
504
DISPLAY A MAP OF THE VELOCITY OF THE AIRFLOW USING THE PROFILE
506
WAIT FOR NEW DATA TO BE GENERATED BY THE SENSOR SYSTEM
508
UPDATE THE PROFILE WITH THE NEW DATA
510
UPDATE THE MAP DISPLAYED ON THE DISPLAY SYSTEM

FIG. 5

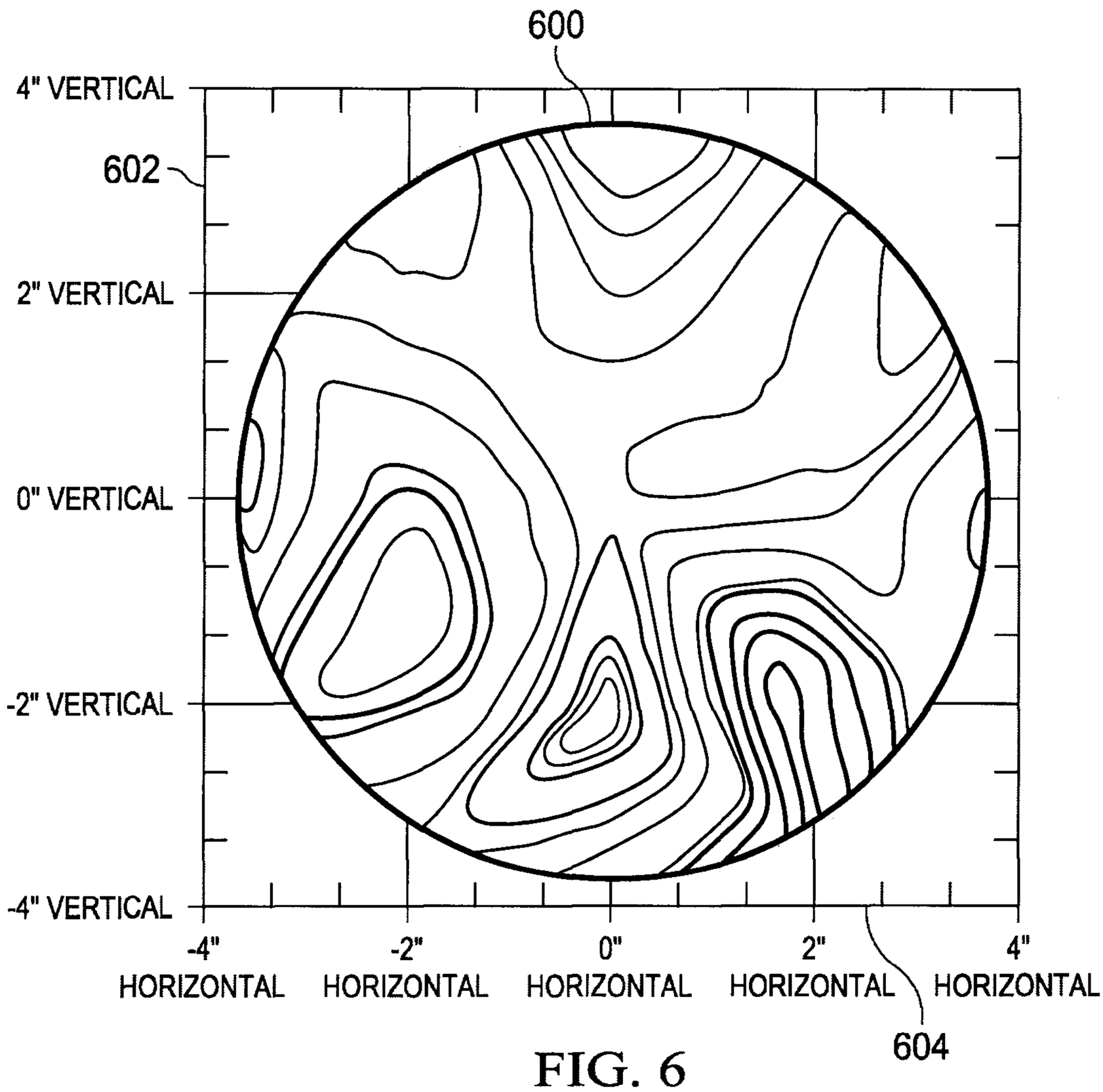
600
4" VERTICAL
602
2" VERTICAL
0" VERTICAL
-2" VERTICAL
-4" VERTICAL
-4" HORIZONTAL
-2" HORIZONTAL
0" HORIZONTAL
2" HORIZONTAL
4" HORIZONTAL
604

FIG. 6

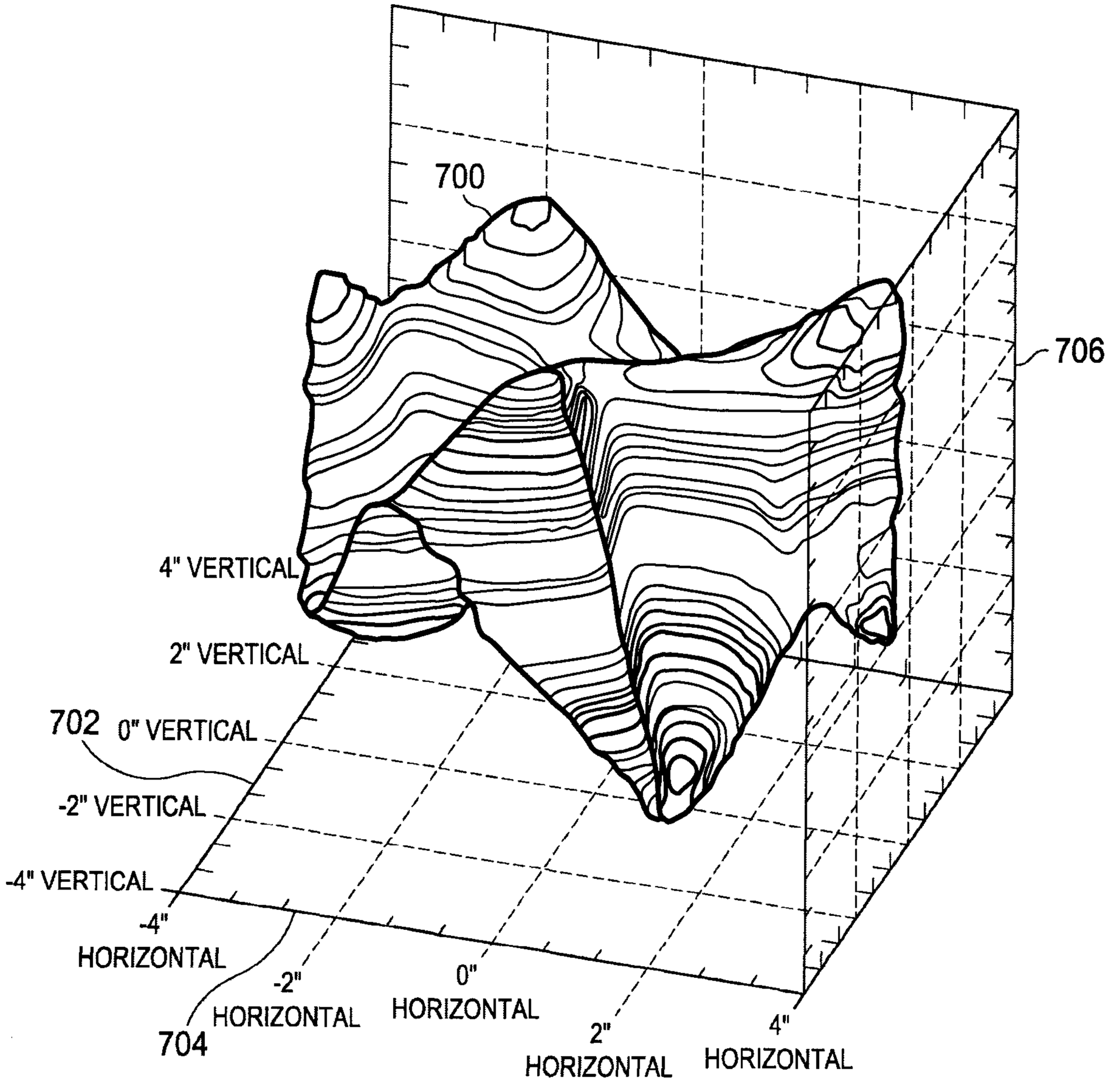
700
706
4" VERTICAL
2" VERTICAL
702
0" VERTICAL
-2" VERTICAL
-4" VERTICAL
-4"
HORIZONTAL
-2"
HORIZONTAL
0"
HORIZONTAL
2"
HORIZONTAL
4"
HORIZONTAL
704

FIG. 7

FIG. 8

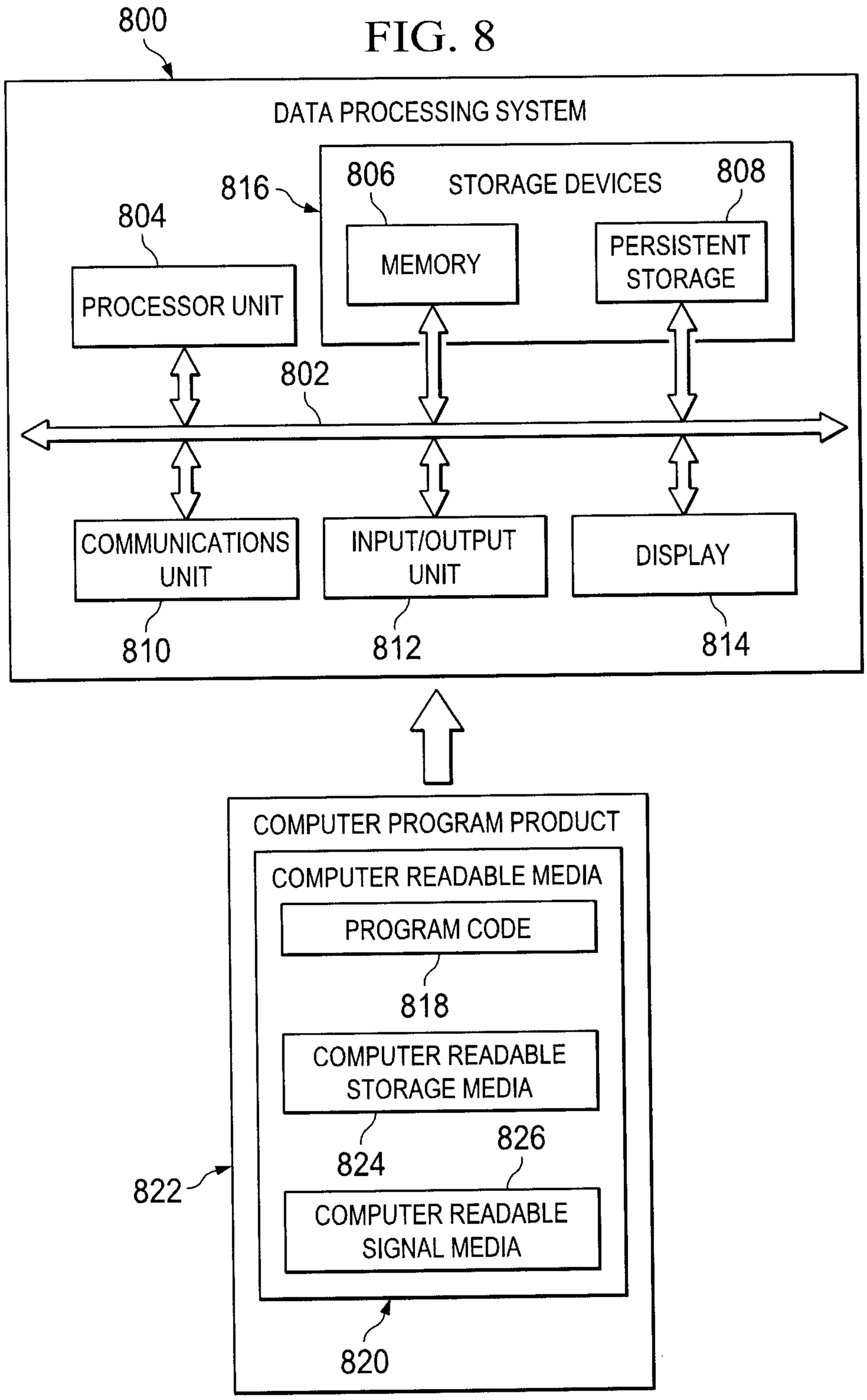
800
DATA PROCESSING SYSTEM
816
806
STORAGE DEVICES
808
804
MEMORY
PERSISTENT STORAGE
PROCESSOR UNIT
802
COMMUNICATIONS UNIT
INPUT/OUTPUT UNIT
DISPLAY
810
812
814
COMPUTER PROGRAM PRODUCT
COMPUTER READABLE MEDIA
PROGRAM CODE
818
COMPUTER READABLE STORAGE MEDIA
824
826
822
COMPUTER READABLE SIGNAL MEDIA
820

FIG. 9

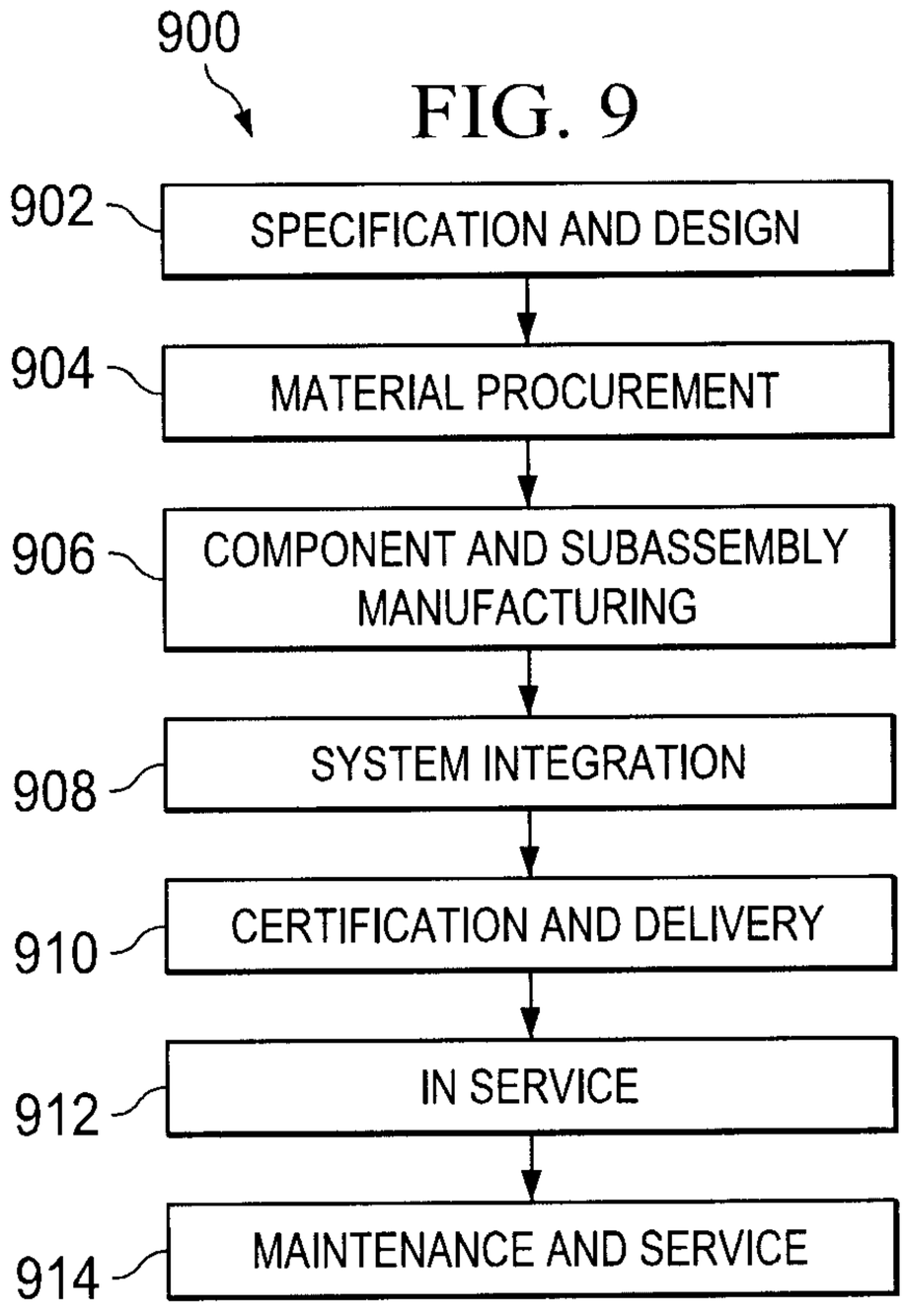
900
902
SPECIFICATION AND DESIGN
904
MATERIAL PROCUREMENT
906
COMPONENT AND SUBASSEMBLY MANUFACTURING
908
SYSTEM INTEGRATION
910
CERTIFICATION AND DELIVERY
912
IN SERVICE
914
MAINTENANCE AND SERVICE

FIG. 10

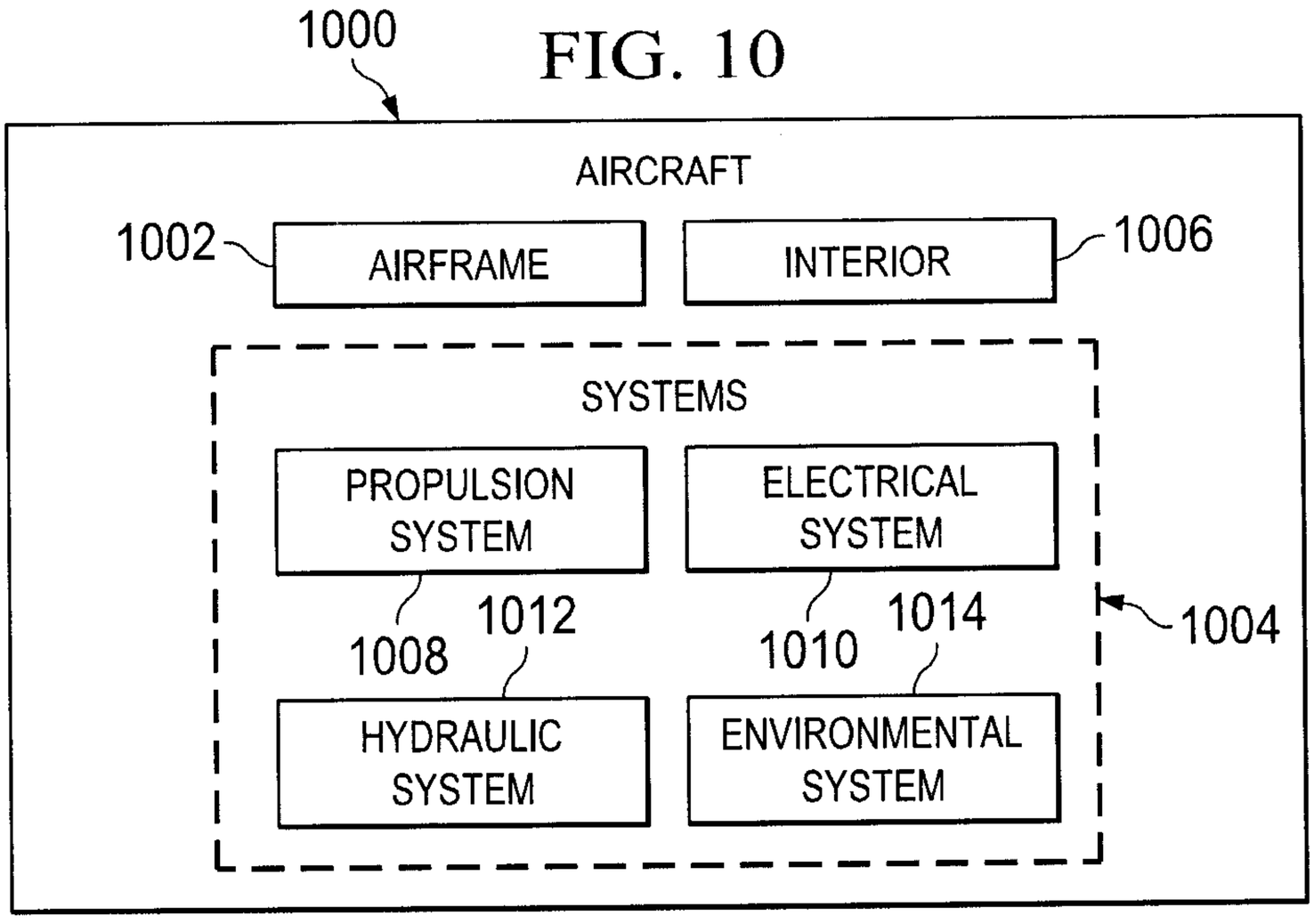
1000
AIRCRAFT
1002
AIRFRAME
INTERIOR
1006
SYSTEMS
PROPULSION SYSTEM
ELECTRICAL SYSTEM
1008
1012
1010
1014
HYDRAULIC SYSTEM
ENVIRONMENTAL SYSTEM
1004

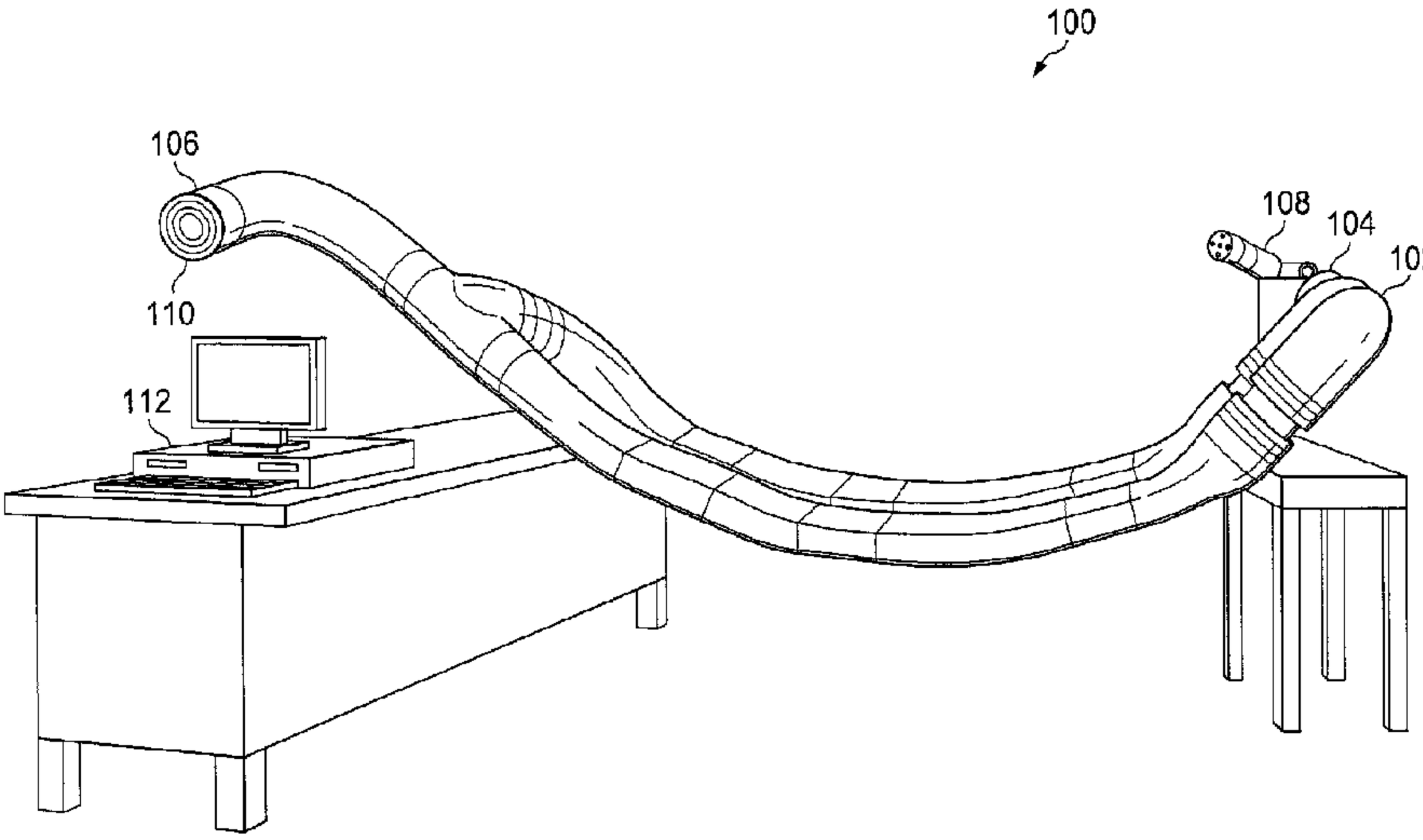
100
106
110
112
108
104
102