US 20040133158A1

(19) United States

(12) Patent Application Publication (10) Pub. No.: US 2004/0133158 A1

Keith et al. (43) Pub. Date: Jul. 8, 2004

(54) BALLOON CATHETER WITH DISTAL GUIDE WIRE LUMEN

(75) Inventors: **Peter T. Keith**, Fridlev, MN (US); **Charles L. Euteneuer**, St. Michael, MN (US)

Correspondence Address:
Glenn M. Seager
CROMPTON, SEAGER & TUFTE, LLC
Suite 800
1221 Nicollet Avenue
Minneapolis, MN 55403-2420 (US)

(73) Assignee: **SCIMED LIFE SYSTEMS, INC.**

(21) Appl. No.: **10/741,574**

(22) Filed: **Dec. 19, 2003**

Related U.S. Application Data

(63) Continuation of application No. 09/886,328, filed on Jun. 21, 2001, now Pat. No. 6,733,487, which is a continuation of application No. 09/132,119, filed on Aug. 11, 1998, now Pat. No. 6,273,879, which is a continuation of application No. 08/955,049, filed on Oct. 21, 1997, now abandoned, which is a continuation of application No. 08/657,013, filed on May 30, 1996, now Pat. No. 5,702,439, which is a continuation of application No. 08/521,460, filed on Aug. 30, 1995, now Pat. No. 5,522,818, which is a continuation of application No. 08/344,931, filed on Nov. 23, 1994, now abandoned, which is a continuation of application No. 08/035,254, filed on Mar. 22, 1993, now Pat. No. 5,395,334, which is a continuation of application No. 07/792,786, filed on Nov. 15, 1991, now Pat. No. 5,217,482, which is a continuation of application No. 07/574,265, filed on Aug. 28, 1990, now Pat. No. 5,156,594.

Publication Classification

(51) **Int. Cl.**[7] **A61M 29/00**

(52) **U.S. Cl.** **604/103.04**

(57) **ABSTRACT**

An over-the-wire balloon dilatation catheter has a stainless steel hypotube catheter shaft, an intermediate sleeve section bonded to the shaft and a distal balloon section connected to the sleeve section. The sleeve section is formed from relatively flexible polymer materials and includes an inner core tube which defines a guide wire lumen extending only through a distal portion of the catheter (including its sleeve and balloon sections) to facilitate fast balloon catheter exchanges. A distal end of the hypotube shaft is crimped laterally and the core tube is nested and bonded within the crimp to provide a proximal outlet for the guide wire lumen. The hypotube shaft provides an inflation lumen for the balloon, with the inflation lumen being continued as an annular inflation lumen through the sleeve section where an outer sleeve is bonded about the core tube and extends from the distal end of the hypotube shaft to the balloon section. A kink-resistant coil structure extends distally from the distal end of the hypotube shaft to provide a gradual change in stiffness along the length of the catheter from the relatively stiff hypotube shaft to the relatively flexible distal portion of the catheter.

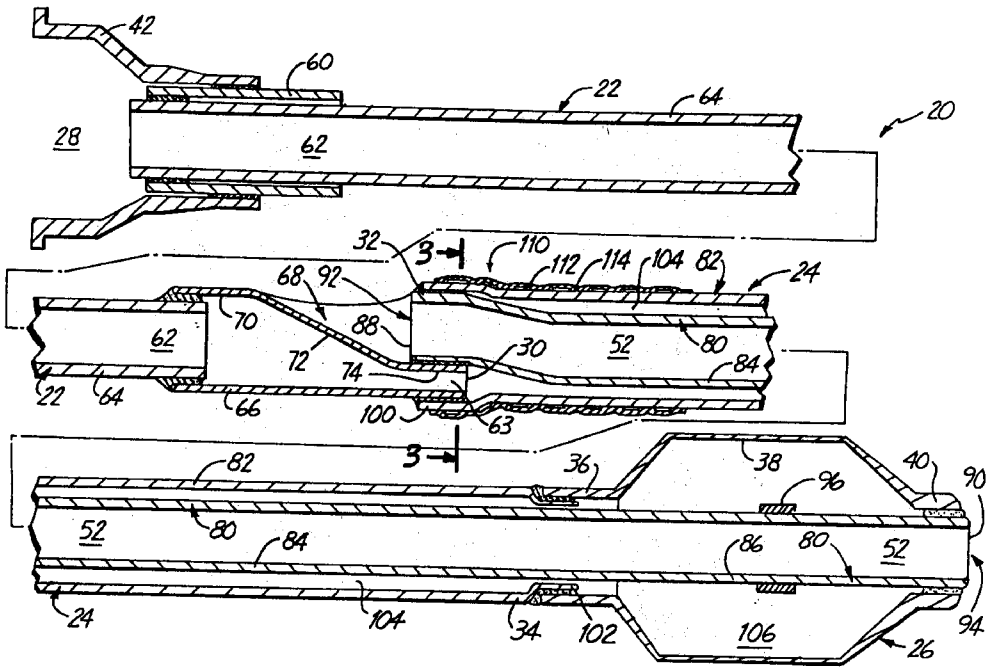

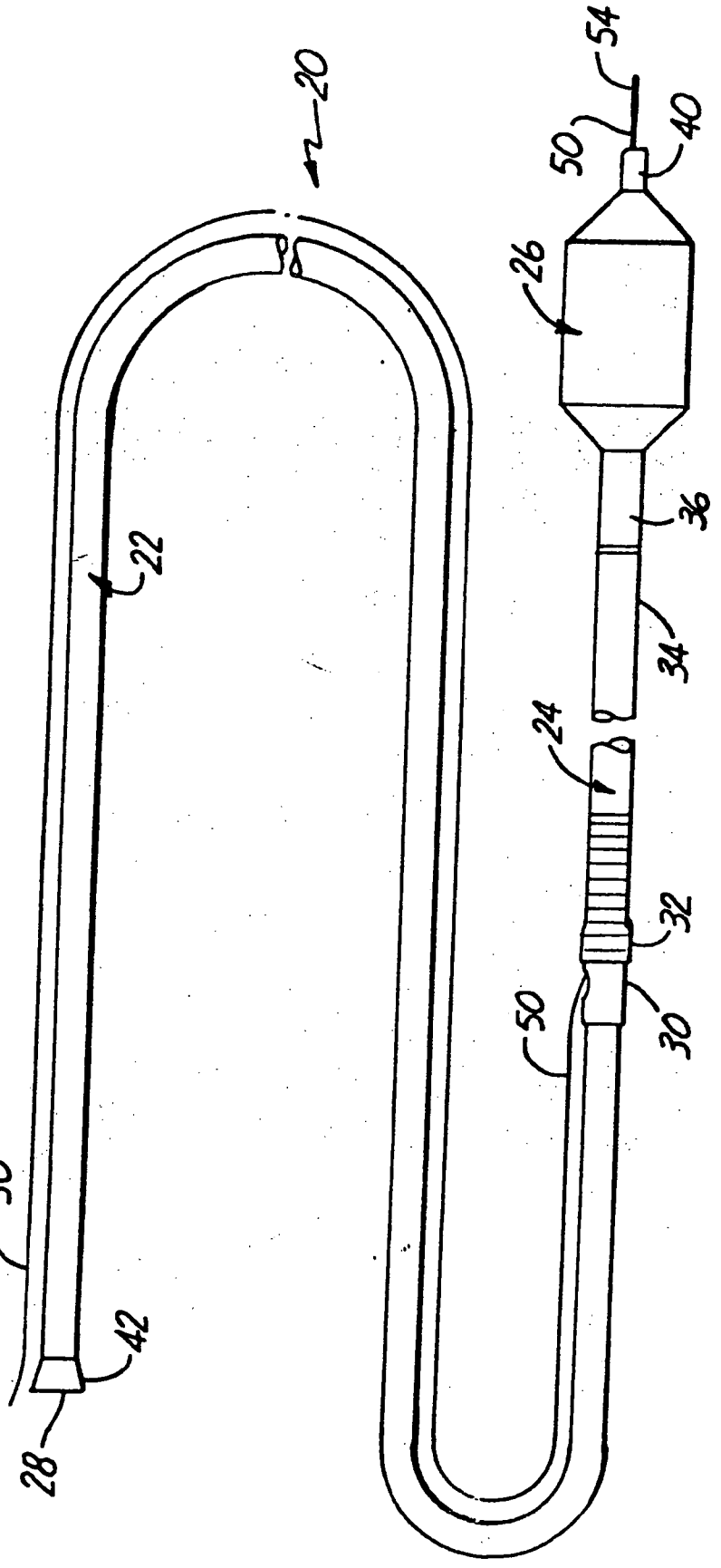

Fig. 1

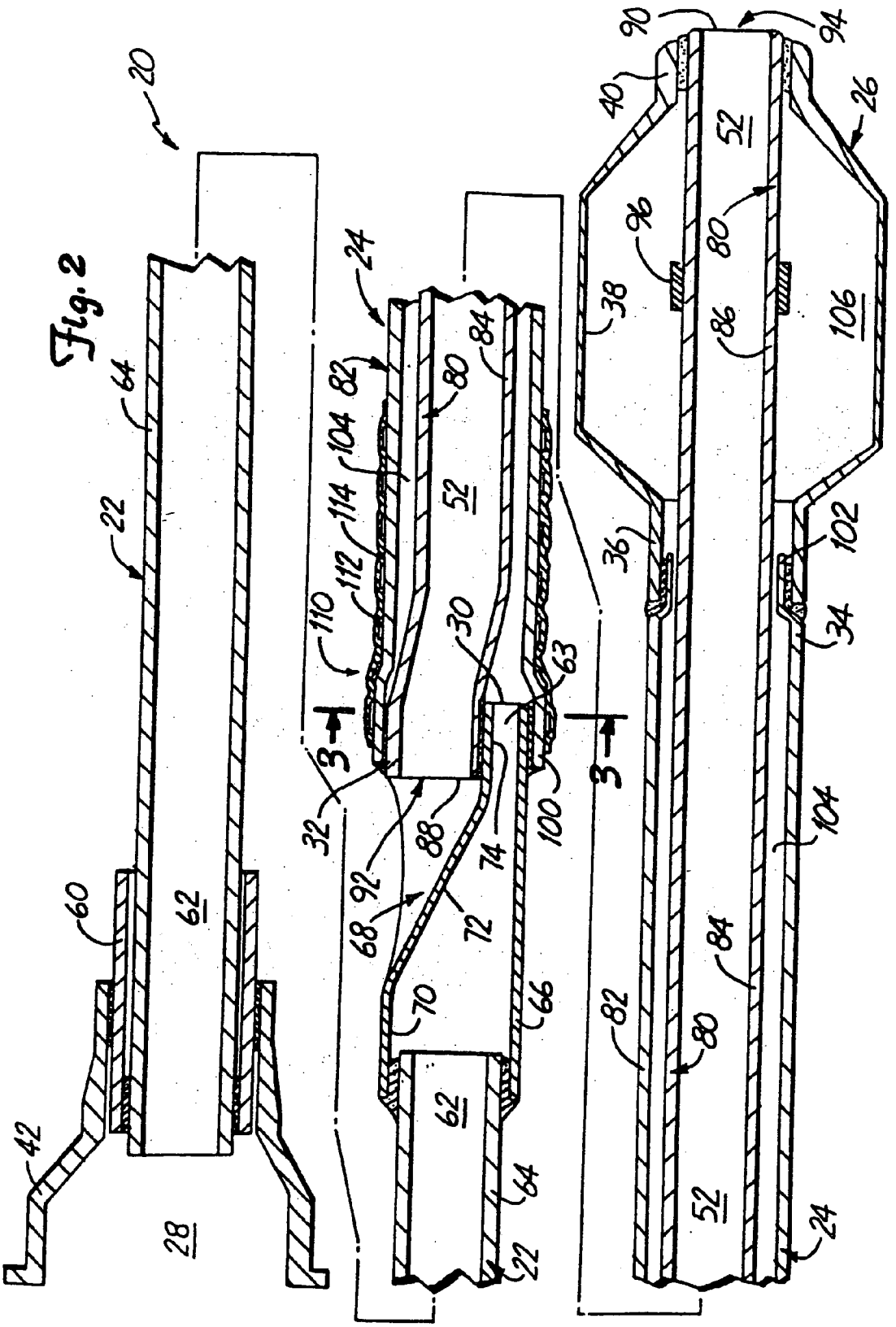
Fig. 2
20
22
24
26
28
30
32
34
36
38
40
42
52
60
62
63
64
66
68
70
72
74
80
82
84
86
88
90
92
94
96
100
102
104
106
110
112
114
3
3

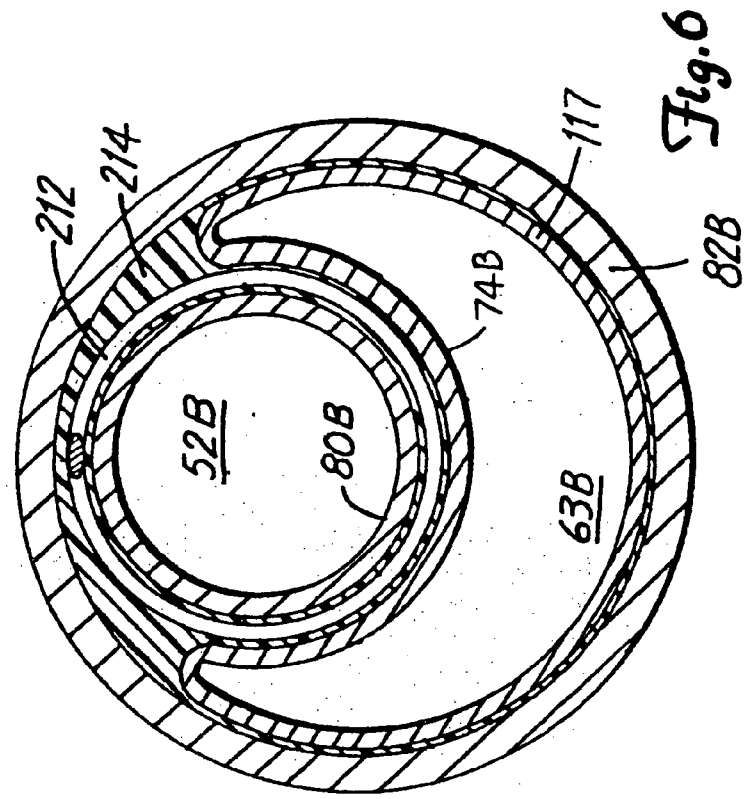

Fig.6

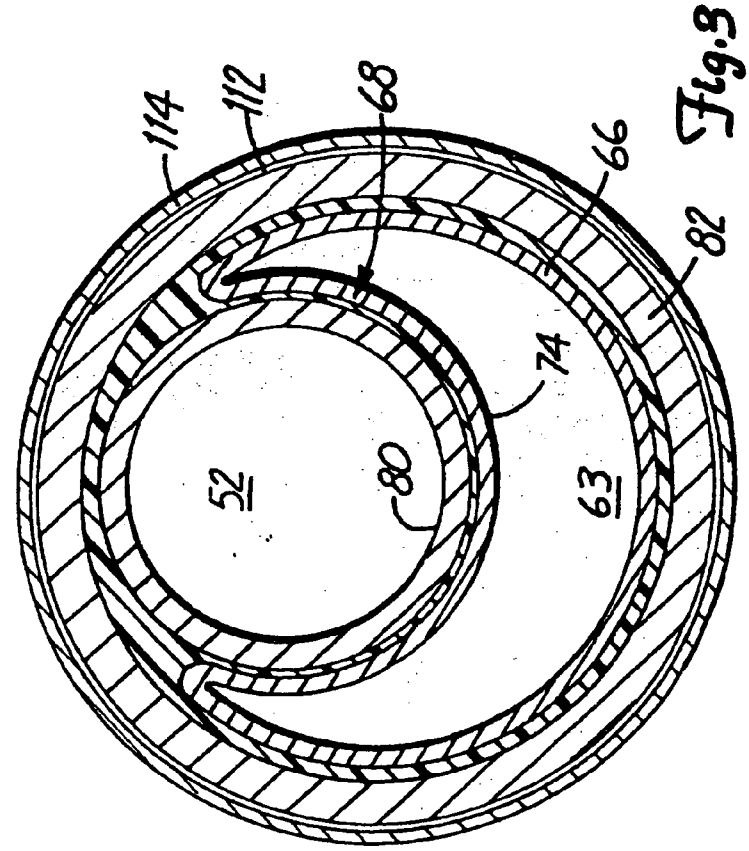

Fig.3

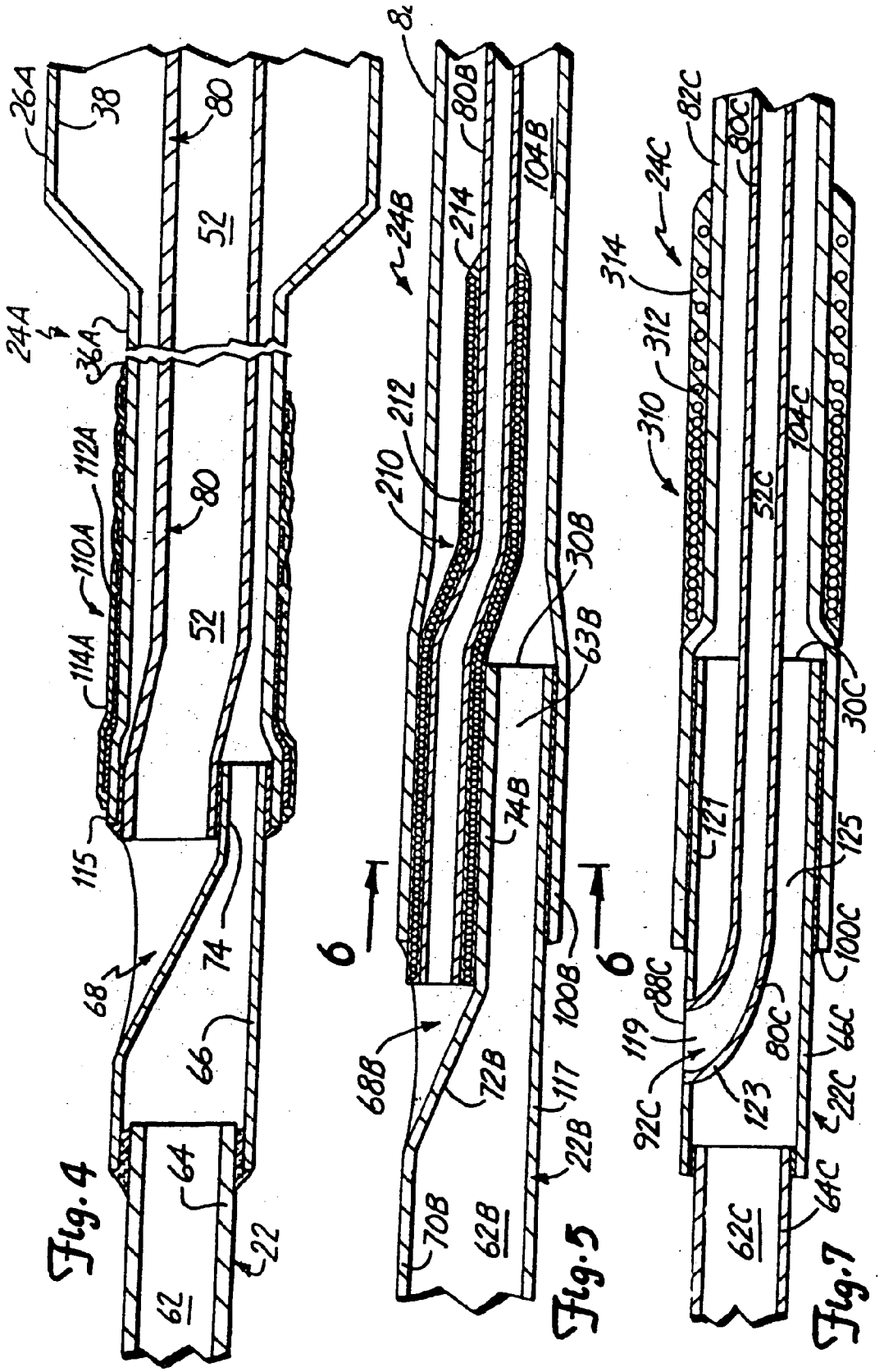

Fig. 4

Fig. 5

Fig. 7

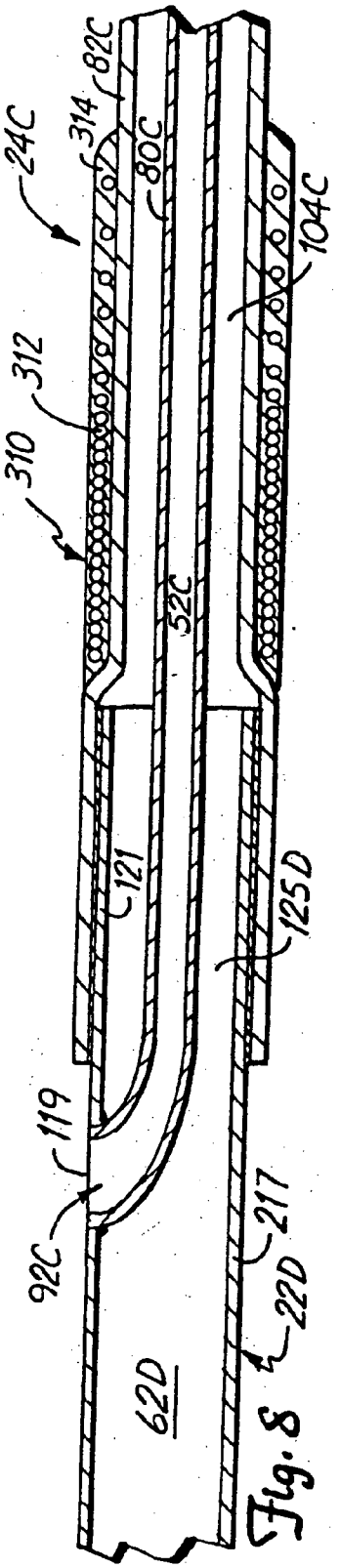

Fig. 8

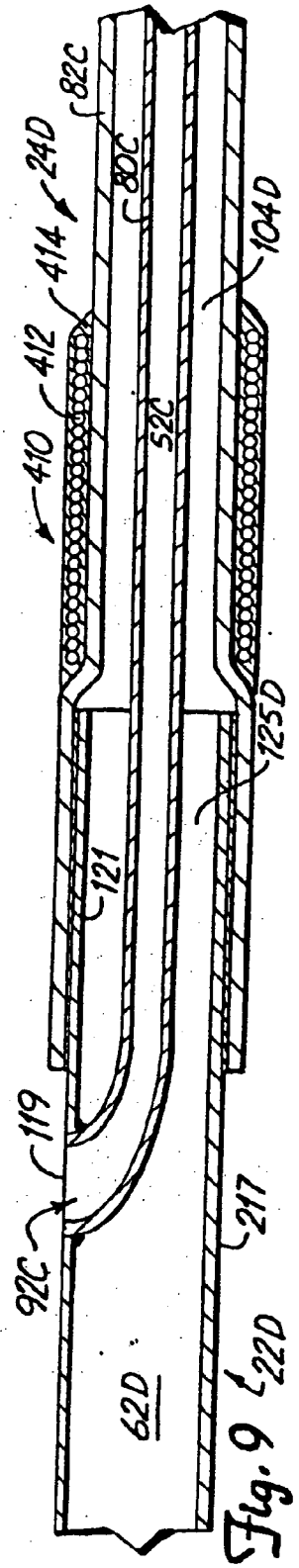

Fig. 9

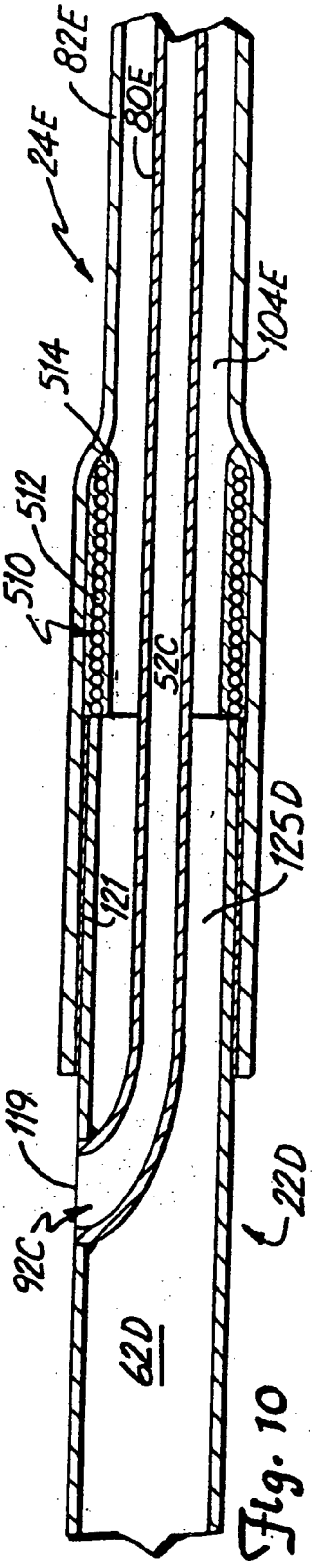

Fig. 10

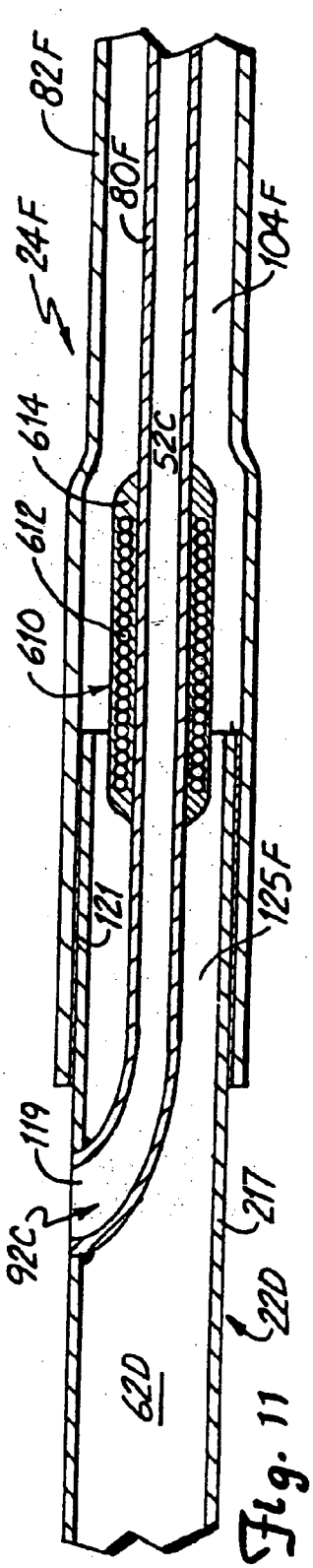

Fig. 11

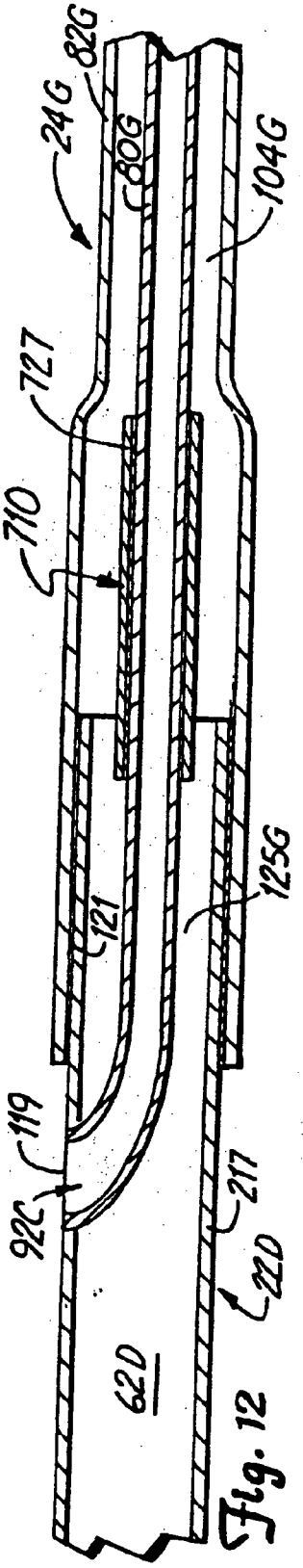

Fig. 12

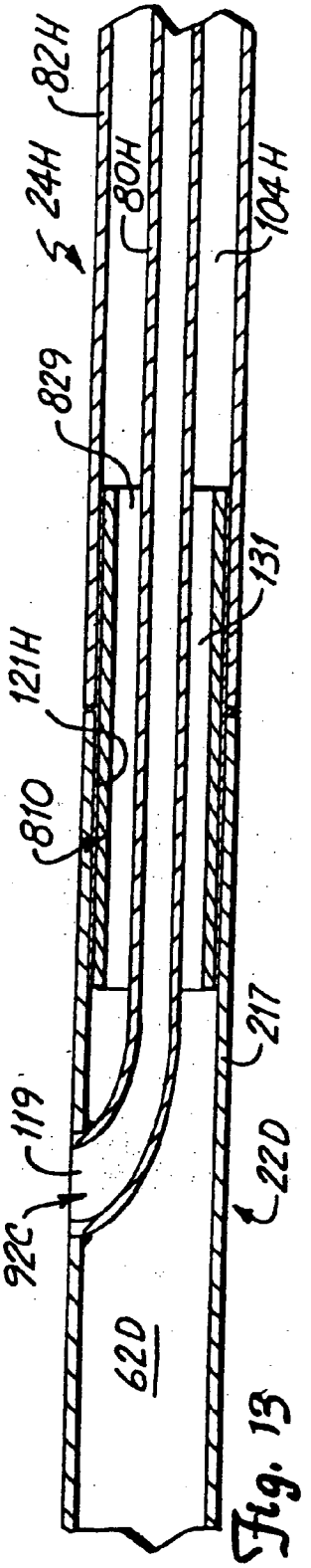

Fig. 13

BALLOON CATHETER WITH DISTAL GUIDE WIRE LUMEN

RELATED APPLICATIONS

[0001] This is a Continuation Application of pending prior application Ser. No. 07/792,786, filed on Nov. 15, 1991, which is a Continuation of prior application Ser. No. 07/574,265, filed on Aug. 28, 1990, which issued as U.S. Pat. No. 5,16,594, on Oct. 20, 1992.

BACKGROUND OF INVENTION

[0002] The present invention relates to the field of angioplasty. In particular, the present invention relates to a dilatation balloon catheter of the "over-the-wire" type having a relatively short distal guide wire lumen extending through the balloon of the catheter.

[0003] Angioplasty procedures have gained wide acceptance in recent years as efficient and effective methods for treating types of vascular disease. In particular, angioplasty is widely used for opening stenoses in the coronary arteries, although it is also used for the treatment of stenoses in other parts of the vascular system.

[0004] The most widely used form of angioplasty makes use of a dilatation catheter which has an inflatable balloon at its distal end. Typically, a hollow guide catheter is used in guiding the dilatation catheter through the vascular system to a position near the stenoses (e.g., to the coronary artery ostia). Using fluoroscopy, the physician guides the dilatation catheter the remaining distance through the vascular system until a balloon is positioned to cross the stenoses. The balloon is then inflated by supplying fluid under pressure through an inflation lumen in the catheter to the balloon. The inflation of the balloon causes stretching of the artery and pressing of the lesion into the artery wall, to reestablish acceptable blood flow through the artery.

[0005] There has been a continuing effort to reduce the profile and shaft size of the dilatation catheter so that the catheter not only can reach but also can cross a very tight stenosis. A successful dilatation catheter must also be sufficiently flexible to pass through tight curvatures, especially in the coronary arteries. A further requirement of a successful dilatation catheter is its "pushability". This involves the transmission of longitudinal forces along the catheter from its proximal end to its distal end, so that a physician can push the catheter through the vascular system and the stenoses.

[0006] Two commonly used types of dilatation catheters are referred to as "over-the-wire" catheters and "non-over-the-wire" catheters. An over-the-wire catheter is one in which a separate guide wire lumen is provided in the catheter so that a guide wire can be used to establish the path through the stenoses. The dilatation catheter can then be advanced over the guide wire until the balloon on the catheter is positioned within the stenoses. One problem with the over-the-wire catheter is the requirement of a larger profile and a generally larger outer diameter along the entire length of the catheter in order to allow for a separate guide wire lumen therethrough.

[0007] A non-over-wire catheter acts as its own guide wire, and thus there is no need for a separate guide wire lumen. One advantage of a non-over-the-wire catheter is its potential for a reduced outer diameter along its main shaft since no discrete guide wire lumen is required. However, one disadvantage is the inability to maintain the position of the guide wire within the vascular system when removing the catheter and exchanging it for a catheter having a smaller (or larger) balloon diameter. Thus, to accomplish an exchange with a non-over-the-wire catheter, the path to the stenoses rust be reestablished when replacing the catheter with one having a different balloon diameter.

[0008] In an effort to combine the advantages of an over-the-wire catheter with a non-over-the-wire catheter, catheters have been developed which have guide wire lumens which extend from a distal end of the catheter through the dilatation balloon and then exit the catheter at a point proximal of the dilatation balloon. The guide wire thus does not extend through the entire length of the catheter and no separate guide wire lumen is required along a substantially proximal section of the catheter. That proximal section can thus have a smaller outer diameter since it is only necessary to provide an inflation lumen therethrough for catheter operation. A further advantage of this type of modified over-the-wire-catheter is that the frictional forces involved between the guide wire and the shortened guide wire lumen are reduced, thereby reducing resistance to catheter pushability and enhancing the "feel" and responsiveness of the catheter to a physician.

[0009] Perhaps the most significant advantage of using a shortened guide wire lumen is in the ease of exchange of the catheter over the guide wire. In performing an angioplasty procedure using such a catheter, the catheter is "back loaded" over the guide wire by inserting the proximal tip of the guide wire into a distal opening of the guide wire lumen in the catheter. The catheter is then advanced by "feeding" the catheter distally over the guide wire while holding the guide wire stationary. The proximal end of the guide wire will then emerge out of the proximal opening of the guide wire lumen (which is substantially spaced distally from the proximal end of the catheter itself) and is accessible again for gripping by the physician. The catheter can be preloaded onto the guide wire in this manner before the guide wire is inserted into the guide catheter or after. The either case, the guide wire is steered and passed through the guide catheter, coronary vessels and across a lesion. The exposed portion of the guide wire is then grasped while the catheter is advanced distally along the guide wire across the lesion. Using this procedure, little axial movement of the guide wire occurs during catheter loading and positioning for angioplasty.

[0010] If the dilatation balloon is found to be inadequate (too small or too large), the catheter can be similarly withdrawn without removing the guide wire from across the lesion. The guide wire is grasped while the catheter is withdrawn, and when the proximal opening of the guide wire lumen is reached, the grasping hand must be moved incrementally away from the proximal opening as the catheter is incrementally withdrawn, until the catheter is fully removed from the guide catheter and the guide wire is thus again exposed and accessible adjacent to the proximal end of the guide catheter.

[0011] This shortened guide wire lumen type of dilatation catheter design thus offers the advantages associated with the rapid exchangeability of catheters. The design also presents the potential to provide a smaller catheter shaft, since the guide wire is not contained within the proximal

portion of the catheter shaft. The smaller catheter shaft thus allows for better contrast media injection and, as a result, better visualization. In addition, because of the rapid exchangeability features, standard non-extendable guide wires of approximately 175 centimeters in length may be used. Further, because the guide wire is contained in only a distal shorter guide wire lumen of the catheter, free wire movement is enhanced when compared to a standard over-the-wire catheter where the guide wire extends through a guide wire lumen extending along the entire length of the catheter.

[0012] While several structures for such shortened guide wire lumen dilatation catheter have been proposed these structures suffer from several disadvantages. Such catheters have been one piece polyethylene catheters having dual lumen configurations adjacent their distal regions. Typically, such catheters have larger than necessary shaft sizes and are stiffer in their distal regions than would be desired, including those portions bearing the dilatation balloon. A further disadvantage is that the proximal shaft portion of such catheters is relatively flexible, and has low column strength shaft, so that it tends to "bunch" and buckle when advanced across a lesion. To counteract this deficiency in such designs, additional stiffener elements have been provided in the shaft, which necessarily require a larger catheter shaft to accommodate the stiffener element structure. The known dilatation balloon catheter designs which include shortened guide wire lumens extending through the distal portion of the catheter suffer from the disadvantages mentioned above and do not take advantage of the unique opportunities presented by the possibilities of such designs in construction and application.

SUMMARY OF THE INVENTION

[0013] The present invention is an over-the-wire dilatation balloon catheter which has a guide wire lumen extending through only a distal portion of the catheter. The guide wire lumen extends from a distal end of the catheter proximally through a balloon of the catheter and exits the catheter at a point proximal of the balloon, but substantially distally from a proximal end of the catheter itself.

[0014] The present invention for a balloon dilatation catheter includes a thin-walled, high strength metallic tube having a longitudinal inflation lumen extending therethrough from its proximal end to its distal end. An intermediate sleeve section extends distally from the metallic tube. The sleeve section is more flexible than the metallic tube, and includes a proximal segment of inner core tube which has a longitudinal guide wire lumen extending therethrough and an outer sleeve which extends over the proximal segment of the core tube to define a longitudinally extending annular inflation lumen therebetween that is in fluid communication with the inflation lumen of the metallic tube. The guide wire lumen has an outlet at a proximal end of the proximal segment of the core tube, and the core tube has a distal segment which extends distally beyond the distal end of the outer sleeve. Means are provided for exposing the guide wire lumen outlet to the exterior of the catheter adjacent and proximal to the distal end of the metallic tube, without compromising the integrity of the inflation lumens extending through the catheter. An inflatable balloon extends over the distal segment of the core tube and has its proximal end connected to the distal end of the outer sleeve. A distal end of the balloon is connected to the core tube so that an interior of the balloon is in fluid communication with the annular inflation lumen in the sleeve section. Means are provided for preventing significant closure of the guide wire lumen and annular inflation lumen in the sleeve section adjacent the distal end of the metallic tube when the more flexible sleeve section is bent laterally relative to the metallic tube.

[0015] In a preferred embodiment of the present invention, the metallic tube is formed from a proximal relatively long stainless steel tube and a distal relatively short stainless steel tube bonded thereto. The outer diameter of the proximal tube is smaller than the outer diameter of the distal tube, thus providing a catheter structure which is highly trackable and has a generally all shaft cuter diameter, yet is very pushable and responsive to a doctor controlling movement of the catheter from its proximal end. Preferably, the means for exposing includes a longitudinal crimp adjacent the distal end of the distal stainless steel tube. The crimp extends laterally inwardly from one side of the distal tube, and has a proximal transition region and distal bonding region. The proximal end of the inner core tube is nested within the distal bonding region of the crimp and bonded thereto. The outer sleeve extends over at least a distal portion of the bonding region and is sealably affixed thereabout.

[0016] The means for preventing closure of a present invention may take a number of different forms. In a preferred embodiment, the means for preventing closure comprises a coil member affixed to the sleeve section adjacent the distal end of the metallic tube. As such, the coil member may be affixed about the outer sleeve to extend distally from the metallic tube or about the inner core tube to extend distally from the metallic tube. Such a coil member further nay have its coils spaced uniformly apart or spaced increasingly apart as it extends distally from the metallic tube. Preferably, the coil member is formed from a spirally shaded ribbon. A compression sheath is provided to envelope the coil member and maintain the coil member in secure engagement to the sleeve section. In an alternative embodiment, the means for preventing closure comprises a tubular member affixed to the sleeve section adjacent the distal end of the metallic tube, with the tubular member being formed from a polyimide material.

[0017] Such closure preventing means thus provide a bending relief design between the relatively stiff metallic tube and more flexible distal region of the balloon dilatation catheter, to prevent kinking during catheter preparation work and handling (prior to insertion of the dilatation catheter into the guide catheter and patient). Such kinking or "crimping" of the catheter can result in a binding on the guide wire as it extends through the guide wire lumen or a reduction in size of the annular inflation lumen between the metallic tube and balloon or a compromise in strength of the catheter tubings, all of which will compromise the utility and responsiveness of the dilatation catheter. In addition, the closure preventing means reduces the possibility of a failure or separation of the bonds adjacent the distal end of the metallic tube which may be caused by excess strain placed on such bonds during catheter preparation or handling.

BRIEF DESCRIPTION OF THE DRAWINGS

[0018] **FIG. 1** is a side elevational view of a balloon dilatation catheter of the present invention having a distal guide wire lumen therethrough and showing a guide wire.

[0019] **FIG. 2** is a sectional side elevational view of the balloon dilatation catheter of **FIG. 1**.

[0020] **FIG. 3** is an enlarged sectional view as taken along lines **3-3** in **FIG. 2**.

[0021] **FIG. 4** is a sectional side elevational view of a portion of the catheter of the present invention, illustrating an alternative structure for a reinforcing coil member thereon.

[0022] **FIG. 5** is a sectional side elevational view of a portion of the catheter of the present invention, illustrating an alternative structure for a reinforcing coil member thereon.

[0023] **FIG. 6** is an enlarged sectional view as taken along lines **6-6** in **FIG. 5**.

[0024] **FIG. 7** is a sectional view of a portion of an alternative embodiment of the catheter of the present invention.

[0025] **FIG. 8** is a sectional view of a portion of an alternative embodiment of the catheter of the present invention.

[0026] **FIG. 9** is a sectional view of a portion of an alternative embodiment of the catheter of the present invention.

[0027] **FIG. 10** is a sectional view of a portion of an alternative embodiment of the catheter of the present invention.

[0028] **FIG. 11** is a sectional view of a portion of an alternative embodiment of the catheter of the present invention.

[0029] **FIG. 12** is a sectional view of a portion of an alternative embodiment of the catheter of the present invention.

[0030] **FIG. 13** is a sectional view of a portion of an alternative embodiment of the catheter of the present invention.

[0031] Although the above-identified drawing figures set forth various embodiments of the invention, other embodiments of the invention are also contemplated, as noted in the discussion. In all cases, this disclosure presents illustrated embodiments of the present invention by way of representation and not limitation. It should be understood that numerous other modifications and embodiments can be devised by those skilled in the art which will fall within the scope and spirit of the principles of this invention.

DETAILED DESCRIPTION OF THE PREFERRED EMBODIMENTS

Overall Catheter Structure

[0032] A balloon dilatation catheter **20** of the present invention is illustrated generally in **FIG. 1**. The catheter **20** has a proximal main shaft section **22**, an intermediate sleeve section **24** and a distal balloon section **26**. The main shaft section **22** has a proximal end **28** and a distal end **30**. Likewise, the intermediate sleeve section **24** has a proximal end **32** and a distal end **34**. The distal balloon section **26** has a proximal waist **36**, an intermediate expandable segment **38** and a distal waist **40**.

[0033] As illustrated in **FIG. 1**, the distal end **30** of the main shaft section **22** is connected to the proximal end **32** of the sleeve section **24**, and the distal end **34** of the sleeve section **24** is connected to the proximal waist **36** of the balloon section **26**. In use, the catheter **20** is coupled to an inflation device (not shown) by a luer manifold **42** connected to the proximal end **28** of the rain shaft section **22**. The inflation device thus provides or removes inflation solution from the catheter **20** to selectably inflate or deflate the intermediate expandable segment **38** of the distal balloon section **26** (in **FIG. 1**, expandable segment **38** is shown in its inflated configuration).

[0034] The catheter **20** of the present invention is designed for use in combination with a catheter guide element such as a guide wire **50**. In use in a coronary application, both the guide wire **50** and the catheter **20** are fed through and guided to an arterial lesion by means of a tabular guide catheter (not shown). Both the catheter **20** and guide wire **50** are therefore longer than the guide catheter, with a typical catheter length of approximately 135 cm and a typical guide wire length of approximately 175 cm. As illustrated in **FIG. 1**, the guide wire **50** extends longitudinally along the exterior of the main shaft section **22** of the catheter **20**. Adjacent the distal end **30** of the main shaft section **22**, the guide wire **50** enters the structure of the catheter **20** and extends distally therethrough until it exits the catheter structure adjacent the distal waist **40** of the distal balloon segment **26**. As seen **FIG. 2, a** separate guide wire lumen **52** is provided in the catheter **20** through the intermediate sleeve section **24** and distal balloon section **26** thereof. The guide wire **50** thus is only entrained within the catheter **20** within this guide wire lumen **52**, which is much shorter than the total length of the catheter **20** (e.g., the guide wire lumen **52** is approximately 30 cm long). The guide wire **50** has a proximal end **53** and a distal end **54** and is of a typical structure for guiding angioplasty catheters. At its distal end **54**, the guide wire **50** preferably has a coiled and rounded tip structure which is bendable for steerability of the guide wire.

[0035] Referring now to **FIG. 2**, which shoes the catheter **20** in greater detail, it is seen that the proximal end **28** of the rain shaft section **22** further has a strain relief tube **60** disposed between the luer manifold **42** and shaft section **22**. The strain relief tube **60** is larger than the main shaft section **22**, and thus provides a step-wise strain relief function between the inflexible luer manifold **42** and the more flexible main shaft section **22**. The main shaft section **22**, tubular member **60** and luer manifold **42** are secured together respectively by suitable adhesive means, such as epoxy or cyanoacrylate.

Main Shaft Section

[0036] The main shaft section **22** is preferably formed as a thin-walled, high strength stainless steel tube structure, which is referred to as hypodermic tubing or hypotube. As a tubular structure the main shaft section **22** thus has a longitudinally extending inflation lumen **62** extending therethrough from its proximal end **28** to its distal end **30**, which provides a means for the movement and pressurization of inflation fluid through the catheter **20** to and from the distal balloon section **26**.

[0037] In a preferred embodiment, the main shaft section **22** is formed from two stainless steel tube sections, a

proximal relatively long shaft section **64** and a distal relatively short shaft section **66**. A distal end of the proximal shaft section **64** and a proximal end of the distal shaft section **66** are sealably affixed together by suitable means, such as by a solder joint. The proximal end of the distal shaft section **66** fits coaxially over the distal end of the proximal shaft section **64**, as seen in **FIG. 2**, thereby allowing the proximal shaft section **64** to assume a smaller outer diameter than the distal shaft section **66**. The main shaft section **22** is provided with a lubricous coating (such as polytetraflouroethylene) to lessen frictional resistance (at least to the extent that the proximal shaft section **64** is so coated). The use of a thin-walled (e.g., 0.003 inch wall thickness), metallic tube structure for the main shaft section **22** thus provides a stiff enough shaft for pushability yet allows for a relatively small diameter shaft, thereby enhancing catheter visualization via fluoroscopy and catheter versatility. The inherent high strength nature of such a structure also allows it to withstand the fluid pressures necessary for proper catheter operation, which in a plastic shaft structure would require thicker walls. The high column strength and thickness of a hypotube shaft also gives improved responsiveness to the catheter. Thus, the balloon and distal regions of the catheter move definitively (in a 1:1 relationship) with motions imparted at the catheter's proximal end by a physician. This feature allows the physician to actually "sense" the pathway as the catheter is tracked, which gives valuable information in the passage of the catheter to and through the lesion.

[**0038**] In the distal shaft section **66** of the main shaft section **22**, a longitudinal crimp **68** is provided which extends laterally inwardly from one side of the distal section **66**. The distal shaft section **66** has three sections, a proximal tubular region **70**, a transition region **72**, and a distal bonding region **74**. The crimp **68** extends from its proximal origin in the transition region **72** to its greatest lateral depth in the bonding region **74**. The crimp **68**, as further illustrated in **FIG. 3**, does not seal off or close the inflation lumen **62**, but does transform the inflation lumen from, a circular lumen **62** to a crescent shape through the bonding region **74**, as seen at **63** in **FIG. 3**.

Catheter Intermediate Sleeve Section

[**0039**] The intermediate sleeve section **24** extends distally from the main shalt section **22**, and is bonded thereto adjacent the bonding region **74** of the distal shaft section **66**. The intermediate sleeve section **24** has two primary longitudinal components, an inner core tube **80** and an cuter sleeve or tube **82**. The inner core tube **80** has a proximal segment **84** within the sleeve section **24** and a distal segment **86** within the distal balloon section **26**. The inner core tube **80** and outer sleeve **82** are both preferably formed from thin-walled high density polyethylene.

[**0040**] The inner core tube **80** has a proximal end **88** and a distal end **90**. At its proximal end **88**, the core tube **80** is nested within the bonding region **74** of the distal shaft section **66** and bonded thereto by suitable means, such as epoxy or cyanoacrylate. The core tube **80** is thus affixed to the main shaft section **22** in an "off-axis" alignment at the bonding region **74**. However, as seen in **FIG. 2**, as the core tube **80** extends distally from the main shaft section **22**, it is aligned generally coaxially with the shaft section **22**.

[**0041**] The core tube **80** defines the guide wire lumen **52** extending through the catheter **20**. The guide wire lumen thus has a proximal outlet **92** adjacent the proximal end of the core tube **80** and a distal cutlet **94** adjacent the distal end **80** of the core tube **80**. At least one marker band **96** is provided about the core tube **80** (preferably centered within the expandable segment **38** of the distal balloon section **26**) to aid in illuminating the position of the catheter **20** via fluoroscopy during an angioplasty procedure.

[**0042**] The cuter sleeve **82** is generally tubular in form, and has a proximal end **100** and a distal end **102**. The outer sleeve **82** is bonded about the distal shaft section **66** and the core tube **80** adjacent the bonding region **74**, as seen in **FIGS. 2 and 3** and is held in place thereto by suitable means, such as epoxy or cyanoacrylate. The outer sleeve **82** extends distally from the main shaft section **22** over the proximal segment **84** of the core tube **80**, and as such, defines a distal continuation of the inflation lumen of the catheter **20**. A longitudinally extending annular inflation lumen **104** is formed between the core tube **80** and outer sleeve **82**. Of course, the proximal end **100** of the outer sleeve **82** is securely sealed about the distal shaft section **66** and the core tube **80** so that the longitudinal inflation lumens **62** and **104** through the catheter **20** are not compromised to the exterior of catheter **20**, but are in fluid communication therethrough.

[**0043**] The intermediate sleeve structure defined above is the basic sleeve structure for all embodiments of the present invention contemplated and disclosed herein—namely, an inner core tube bonded to a distal portion of the main catheter shaft, with an outer sleeve forming an annular continuation of the inflation lumen through the main shaft between the core tube and outer sleeve. As discussed below and illustrated herein, various configurations of the connections and components relative to the formation of the distal guide wire lumen, including the coupling of the main shaft to the intermediate sleeve section, are contemplated.

Catheter Distal Balloon Section

[**0044**] The distal balloon section **26** is connected to the components of the intermediate sleeve section **24**. The proximal waist **36** of the balloon section **26** is connected to the distal end **102** of the outer sleeve **82** by suitable means, such as by epoxy or cyanoacrylate. The distal waist **40** of the balloon section **26** is bonded to the core tube **80** adjacent its distal end **90** by suitable means, such as by epoxy or cyanoacrylate. An interior **106** of the balloon section **26** is thus sealed and in fluid communication with the annular inflation lumen **104** within the sleeve section **24**. In a preferred embodiment, the balloon section **26** is forced from a compliant balloon material (e.g., polyolefin), although a balloon formed from thin-walled non-compliant material (e.g., PET—polyethylene terephthalate) is also contemplated.

Kink-Resistant Structure

[**0045**] The metallic main shaft section **22** is relatively stiff compared to the polyethylene intermediate sleeve section **24**. This creates a rather abrupt chance in the flexibility of the materials for the catheter **20** adjacent the distal end **30** of the main shaft section **22** (at the bonding region **74**). The use of a hypotube for the main shaft section **22** in the catheter **20** creates a catheter which is considerably stiffer than most previous over-the-wire angioplasty balloon catheter designs. Such stiffness is not a concern as long as the metallic main

shaft section **22** remains in the relatively straight guide catheter within the patient, and indeed such stiffness provides distinct benefits in use of the catheter **20**, as described above. In the distal portions of the catheter **20** (intermediate sleeve section **24** and distal balloon section **26**), the catheter **20** must be very trackable and flexible in order to negotiate the tortuous coronary anatomy to and across the lesion. The relatively sharp transition in stiffness as the catheter structure changes from the metallic main shaft section **22** to the much more flexible polymer intermediate sleeve section **24** creates two concerns. First, during handling of the catheter prior to usage, there is a potential to kink the catheter structure at that flexibility transition point. Secondly, when the catheter is in vivo, the distal end **30** of the main shaft section **22** could potentially "dig in" to the guide catheter and create excessive friction due to the lack of bending support from a the more flexible intermediate sleeve section **24**.

[**0046**] To address these concerns, a kink-resistant structure **110** is provided to prevent kinking and possible damage to the intermediate sleeve section **24** during catheter preparation, handling and use. In its simplest form, this kink-resistant structure **110** provides a member of intermediate stiffness or transitory stiffness and kink-resistant nature between the relatively stiff main shaft section **22** and the relatively flexible intermediate sleeve section **24**. The kink-resistant structure **110** includes a coil member **112** affixed to the intermediate sleeve section **24** adjacent the distal end **30** of the main shaft section **22**. The coil member **112** creates an intermediate stiffener element between the relatively stiff main shaft section **22** and the relatively flexible intermediate sleeve section **24** to allow bending of the catheter without kinking. The coil member **112** preferably has its coils spaced uniformly apart, and is preferably formed from a spiral ribbon of stainless steel placed about the outer sleeve **82** along that portion thereof extending over the bonding region **74** and distally therefrom. The coil member **112** is secured to the outer sleeve **82** by suitable adhesive means, such as by epoxy. To further secure the coil member **112** to the intermediate sleeve section **24**, a heat-shrinkable sheath **114** is fitted over the coil member **112**. Preferably the sheath **114** is formed from a polyimide or polyolefin material which is expanded radially outwardly and then shrunk down over the coil member **112** and outer sleeve **82** to secure the coil member **112** thereto. To further secure the sheath **114** and coil member **112** in place, some adhesive is provided between the sheath **114** and the intermediate sleeve section **24**. By covering the ends of the coil member **112**, the sheath **114** also lessens the chances of those ends providing a rough edge or catch as the catheter **20** is advanced through the guide catheter or artery.

[**0047**] Although the kirk-resistant structure is described and illustrated in connection with a balloon dilatation catheter, it is contemplated that such a structure be employed in any catheter shaft as a transition from a first thin-walled, high strength metallic tube structure to a second tube structure which is more flexible than the metallic tube structure. Such a kink-resistant structure, as described above (and also below in various embodiments), may be employed in a single lumen catheter shaft, or in multiple lumen catheter shaft having a central core tube such as the multi-lumen shaft illustrated by the intermediate sleeve section of the catheter disclosed in FIGS. **1-4**.

Alternative Catheter Embodiment

[**0048**] Numerous alternative embodiments of the catheter of the present invention are contemplated. For example, several alternative arrangements for the main shaft section and intermediate sleeve structure portion of the catheter are illustrated and discussed herein, but it is not intended that the illustrated embodiments are all inclusive of those structures and designs which are included within the spirit and scope of the present invention. In the following discussion of further alternative embodiments of the present invention, to the extent a component is identical to that of a previously described embodiment, like reference numerals are used.

[**0049**] **FIG. 4** illustrates an alternative embodiment for the distal portion of a catheter according to the present invention. Specifically, the outer sleeve (of the intermediate sleeve section) and the distal balloon section are formed from the same component, as a unitary member. Thus, proximal waist **36**A of distal balloon section **26**A is elongated proximally and acts as the outer sleeve for intermediate sleeve section **24**A. A proximal end **115** of the proximal waist **36**A is sealably fixed about the core tube **80** and main shaft section **22** adjacent the bonding region **74** thereof. It should be understood that the prospect of having a unitary outer sleeve and balloon member is applicable to all embodiments disclosed herein and contemplated, although it is only illustrated and discussed with respect to the catheter structure of **FIG. 4**.

[**0050**] **FIG. 4** also shows another variation for the catheter's structure illustrated in FIGS. **1-3**. In **FIG. 4**, kink-resistant structure **110**A includes coil member **112**A which is defined as a spiral ribbon of stainless steel placed about a proximal portion of the proximal waist **36** along the bonding region **74** and distally therefrom. The coil member **112**A does not have its coils uniformly spaced apart, but rather has its coils spaced increasingly further apart as the coil member extends distally from the main shaft section **22**. This results in a coil member **112**A which becomes increasingly more flexible, thereby "feathering out" the change in relative stiffness and strain or kink relief between the relatively inflexible main shaft section **22** and the relatively flexible intermediate sleeve section **24**A. As before, a heat-shrinkable sheath **114**A is fitted over the coil member **112**A to further secure the coil member **112**A to the sleeve section **24**A.

[**0051**] In **FIG. 5, a** modified main shaft section **22**B is illustrated. The main shaft section **22**B is formed as a thin-walled, high strength stainless steel tube or hypotube, but is defined as a single tubular shaft **117** from its proximal end to its distal end **30**B. The single shaft **117** has a longitudinally extending inflation lumen **62**B therethrough, and at its proximal end (not shown) the single shaft **117** is mounted to an inflation device in a manner such as that illustrated for the catheter of **FIG. 2**. Adjacent its distal end **30**B, the single shaft **117** has a longitudinal crimp **68**B which extends laterally inwardly from one side of the single shaft **117**. The single shaft **117** thus has three sections, a proximal, relatively elongated tubular region **70**B, a relatively short distal transition region **72**B and a relatively short distal bonding region **74**B. The crimp **68**B extends from its proximal origin in the transition region **72**B to its greatest lateral depth in the bonding region **74**B. The crimp **68**B does not seal or close off the inflation lumen **62**B, but rather

transforms the inflation lumen **62**B from a circular lumen to a half-moon lumen through the bonding region **74**B, as seen at **63**B in **FIG. 6**. It is again understood that the use of a single tube to define the main shaft section of the catheter of the present invention is applicable to the other alternative embodiments of the catheter structures disclosed herein.

[**0052**] **FIGS. 5 and 6** also illustrate an alternative arrangement for the kirk-resistant structure of the inventive catheter. Kink-resistant structure **210** includes coil member **212**. The sleeve section **24**B includes an outer sleeve **82**B and an inner core tube **80**B, with the core tube **80**B adapted to be nested within and bonded to the main shaft section **22**B in its distal bonding region **74**B. The coil member **212** of the kink-resistant structure **210** is positioned about the core tube **80**B within the distal bonding region **74**B and extending distally therefrom. The coil member **212** is preferably formed from stainless steel (either from a wire or ribbon) and may have uniform coil spacing or increasingly spaced coils as the coil member **212** extends distally from the main shaft section **22**B. The coil member **212** is secured to the core tube **80**B by suitable means, such as by embedding the coil member **212** in an epoxy layer **214** about the core tube **80**B. A proximal end **100**B of the outer sleeve **82**B is bonded about the main shaft section **22**B and inner tube **80**B and coil structure **210** in the bonding region **74**B thereof, as seen in **FIGS. 5 and 6**. In the intermediate sleeve section **24**B, the inner core tube **80**B thus provides a guide wire lumen **52**B therethrough, and an annular inflation lumen **104**B is provided, between the inner tube **80**B and outer sleeve **82**B. Although the kink-resistant structure **210** is within the annular inflation lumen **104** and the outer sleeve **82**B necks down distally front the main shaft section **22**B, the size of the annular inflating lumen **104** is sufficient to provide proper fluid flow to and from the catheter's balloon.

[**0053**] FIGS. **7-13** illustrate an alternative configuration for that portion of the catheter adjacent the proximal inlet of the guide wire lumen. Instead of providing a crimp structure in the distal end of the main shaft section, an aperture is provided adjacent to and proximal of the distal end of the main shaft section. The aperture is aligned and sealably coupled to the inner tube to define the guide wire lumen proximal outlet. In all disclosed embodiments, the main shaft section is preferably formed from a hypotube-like material.

[**0054**] As seen in **FIG. 7**, an alternative embodiment of the catheter of the present invention has a proximal main shaft section **22**C formed from thin-walled, high strength stainless steel tubing. A longitudinally extending inflation lumen **62**C extends therethrough from a proximal end of the main shaft section **22**C to its distal end **30**C. In the embodiment seen in **FIG. 7**, the main shaft **22**C is formed from two stainless steel tube sections, a proximal relatively long shaft section **64**C and a distal relatively short shaft section **66**C bonded on the distal end of the proximal section **64**C. This two-part main shaft section structure thus allows a substantial length of the main shaft section **22**C to be formed from the proximal shaft section **64**C which has a smaller diameter than the distal shaft section **66**C.

[**0055**] The distal shaft section **66**C has an oval-shaped aperture **119** extending through its wall, with the oval being elongated in the longitudinal direction of the main shaft section **22**C. The aperture **119** is spaced proximally from a distal end of the distal shaft section **66**C (the distal end **30**C of the main shaft section **22**C). The space between the aperture **119** and distal end **30**C thus defines in part a bonding region **121** for connecting the main shaft section **22**C to a distally extending intermediate sleeve section **24**C.

[**0056**] As before, the intermediate sleeve section **24**C includes an inner core tube **80**C and an outer sleeve **82**C. A proximal end **88**C of the core tube **80**C is sealably bonded about the aperture **119** to align the proximal end **88**C and aperture **119** and thereby define a proximal outlet **92**C for a guide wire lumen **52**C extending through the core tube **80**C. As seen in **FIG. 7, a** proximal portion **123** of the core tube **80**C extends laterally from the aperture **119** into the distal shaft section **66**C and turns longitudinally and distally relative thereto to be aligned generally coaxially therewith. As such, the inflation lumen **62**C is continued distally past the aperture **119** as a generally annular inflation lumen **125**, between the core tube **80**C and distal shaft section **66**C (along the bonding region **121**). Proximal end **100**C of the outer sleeve **82**C is bonded about the distal shaft section **66**C in the bonding region **121** by a suitable means, such as by epoxy or cyanoacrylate. As seen in **FIG. 7**, the outer sleeve **82**C extends distally from the main shaft section **22**C over the core tube **80**C and defines a longitudinally extending annular inflation lumen **104**C between the core tube **80**C and outer sleeve **82**C. The proximal end **100**C of the outer sleeve **82**C is sealed about the distal shaft section **66**C so that the longitudinal inflation lumens **62**C, **125** and **104**C are not compromised to the exterior of the catheter, but are in fluid communication therethrough.

[**0057**] In **FIG. 7**, kink-resistant structure **310** includes coil member **312** (of a wire or ribbon-like structure) which is bonded about the outer sleeve **82**C to extend distally from the distal end **30**C of the main shaft section **22**C. In this embodiment, the coil member **312** does not extend about any portion of the main shaft **22**C. The coil member **312** is secured to the outer sleeve **82**C by suitable adhesive means, such as epoxy **314**, and is embedded therein to firmly hold the coil member **312** in place about the intermediate sleeve section **24**C. In the embodiment of **FIG. 7**, the coil member **312** is illustrated with its coils being spaced increasingly longitudinally apart as the coil member **312** extends distally along the catheter.

[**0058**] FIGS. **8-13** also illustrate embodiments of the catheter of the present invention wherein an aperture is provided through the main shaft section wall to accommodate the proximal outlet for the relatively short, distal guide wire lumen. As opposed to the embodiment of **FIG. 7**, however, the embodiments illustrated in FIGS. **8-13** show the main shaft section as a single shaft rather than as a multi-part shaft. Indeed, **FIG. 8** illustrates a catheter structure identical to that of **FIG. 7**, except that the main shaft section **22**D is shown as a single shaft **217**, rather than having proximal and distal shaft sections **64**C and **66**C as seen in **FIG. 7**. As such, the catheter inflation lumen includes longitudinally extending inflation lumens **62**D, **125**D and **104**D.

[**0059**] **FIG. 9** is an embodiment of the catheter of the present invention otherwise similar to **FIG. 8**, except that kink-resistant structure **410** has coil member **412** with uniformly spaced coils along the entire length. Again, the entire coil member **412** is fixed to the outer sleeve **82**C of the

intermediate sleeve section **24**C by embedding the coil member **412** within a suitable material such as epoxy or cyanoacrylate **414**.

[**0060**] In the catheter structure of **FIG. 10**, intermediate section **24**B has an inner core tube **80**E and an outer sleeve **82**E. The structure of the catheter is otherwise the same as the catheter of **FIG. 9**, except that the kink-resistant structure thereof is positioned inside the outer sleeve **82**E rather than outside of the outer sleeve. Kink-resistant structure **510** is affixed to an inner surface of the outer sleeve **82**E distally of the main shaft section **22**D by a suitable means, such as embedded adhesive **514**. The kink-resistant **510** includes coil member **512** which provides an intermediate stiffener between the relatively stiff main shaft section **22**D and the relatively flexible intermediate sleeve section **24**E. As seen, the outer sleeve **82**E necks down distally from the kink-resistant structure **510** to provide a lower profile for the catheter in its distal regions. An annular inflation lumen **104**E formed between the inner tube **80**E and outer sleeve **82**E (and at a proximal end thereof, between the inner tube **80**B and the kink-resistant structure **510**) is not compromised by such a necked-down sleeve design but maintained at sufficient size to provide for adequate and quick inflation and deflation of the balloon.

[**0061**] In **FIG. 11** intermediate sleeve section **24**F includes an inner core tube **80**F and an outer sleeve **82**F. Kink-resistant structure **610** is mounted about the inner tube **80**F along the bonding region **121** and extending distally from the main shaft section **22**D into the intermediate sleeve section **24**F. The kink-resistant structure includes coil member **612** which is affixed about the core tube **80**F by suitable means such as being embedded in epoxy or another suitable adhesive **614**. As seen in **FIG. 11**, the outer sleeve **82**F has an enlarged diameter at its proximal end to accommodate the main shaft section **22**D and the kink-resistant structure **610**, and so that the annular inflation lumens **125**F and **104**F about the core tube **80**F remain sufficiently large to provide proper inflation and deflation pressures to the balloon of the catheter.

[**0062**] **FIGS. 12 and 13** illustrate a further variation of the kink-resistant structure of the present invention. In the embodiments of **FIGS. 12 and 13**, the kink-resistance structure does not include a coil member, is formed from a polymer tube which is of intermediate stiffness between the main shaft section and intermediate sleeve section. In **FIG. 12**, kink-resistant structure **710** is provided which is formed from a polyimide or other stiff polymer tube **727**. The tube **727** is bonded about an inner core tube **80**G of the intermediate sleeve section **24**G by a suitable adhesive, such as epoxy or cyanoacrylate. The tube **727** extends through a distal portion of the bonding region **121** and distally beyond the main shaft section **22**D into the intermediate sleeve section **24**G. Again, an outer sleeve **82**G of the sleeve section **24**G has an enlarged diameter at its proximal end to accommodate the main shaft section **22**D and the kink-resistant structure **710**, and so that the components are dimensioned such that annular inflation lumens **125**G and **104**G are not compromised.

[**0063**] In **FIG. 13**, kink-resistant structure **810** is illustrated, as formed from a polyimide or other stiff polymer tube **829** which is bonded to the inner surfaces of both the main shaft section **22**D and an outer sleeve **82**H of an intermediate sleeve section **24**H at a bonding region **121**H. The tube **829** thus provides not only a kink-resistant structure to accommodate the change in stiffness of the main shaft section and intermediate sleeve section, but also provides a substrate for bonding the to catheter sections together by a suitable adhesive, such as epoxy or cyanoacrylate. A core tube **80**H of the sleeve section **24**H extends through the interior of the tube **829** to the aperture **119** on the main shaft section **22**D. Thus, an annular longitudinally extending inflation lumen **131** is formed as a "bridge lumen" (between the core tube **80**H and tube **829**) from the inflation lumen **62**D to an annular inflation lumen **104**H within the sleeve section **24**H.

[**0064**] As mentioned above, various combinations of these alternative component and catheter structures are contemplated and are intended to be considered, although not explicitly shown. For example, it is contemplated that a two-part main shaft section structure (such as illustrated in **FIGS. 2, 4** and **7**) may be combined with any one of the kink-resistant structure such as that illustrated in FIGS. **8-13**. By way of example and not limitation, a further example of such a combination may include the use of a distal balloon section having an elongated proximal waist (such as shown in **FIG. 4**) with any of the alternative kink-resistant structures disclosed herein.

Conclusion

[**0065**] The balloon dilatation catheter of the present invention is an over-the-wire catheter structure with a distal guide wire lumen which optimizes the features of such a catheter in a way not previously considered or achieved. The use of a hypotube-type main shaft for the catheter allows the attainment of a high strength, pushable shaft having thin walls and small diameter. The further use of a two-part hypotube shaft structure allows an even smaller diameter for the proximal elongated section of the main catheter shaft. Employing a crimp as a means for aligning and creating a proximal outlet for the relatively short guide wire lumen also serves to provide a transition region for exit of the guide wire from the catheter itself which is relatively gradual. The crimped shaft design also provides additional stiffness in the transition region where the guide wire enters and exits the catheter proximally of the balloon thereof, thereby creating a more rigorous catheter structure. Because the catheter of the present invention is based upon a relatively stiff proximal main shaft section, and such a catheter must have a relatively flexible distal portion for working through the tortuous arterial anatomy, a strain relief or kink-resistant structure is provided to make a more gradual transition between the relatively stiff main catheter shaft and the relatively flexible distal portion of the catheter. Various configurations of strain relief and kink-resistant structures are disclosed herein, and all are believed suitable to accomplish the desired end of preventing significant closure of the guide wire lumen and annular inflation lumen in the more flexible distal portions of the catheter, especially adjacent the distal end of the main catheter shaft.

[**0066**] Although the present invention has been described with reference to preferred embodiments, workers skilled in the art will recognize that changes may be made in form and detail without departing from the spirit and scope of the invention.

What is claimed is:

1. A balloon dilatation catheter comprising:

a tube formed from a relatively stiff material composition, the tube defining a first shaft section having a proximal end and a distal end;

a second shaft section, more flexible than the first shaft section, disposed distally of the first shaft section;

the first and second shaft sections having an inflation lumen defined therethrough;

a dilatation balloon attached to the distal end of the second shaft section, the dilatation balloon being in fluid communication with the inflation lumen such that inflation pressure may be provided to the balloon therethrough;

an intermediate section disposed between the first shaft section and the second shaft section, the intermediate section configured to include a stiffness between the stiffness of the first shaft section and the stiffness of the second shaft section; and

wherein the second shaft section includes a second lumen extending through the interior of the balloon, the second lumen being shorter than the inflation lumen, the second lumen having a proximal guide wire opening at its proximal end and a distal guide wire opening at its distal end, and the second lumen being formed and aligned to receive a guide wire there in such that the catheter may be slidably moved on the guide wire.

2. The balloon dilatation catheter of claim 1 wherein the proximal guide wire opening is disposed adjacent the proximal end of the second shaft section.

3. The balloon dilatation catheter of claim 1 wherein the proximal guide wire opening is disposed adjacent the distal end of the first shaft section.

4. The balloon dilatation catheter of claim 1 wherein the proximal, guide wire opening is disposed along the intermediate section.

5. The balloon dilatation catheter of claim 1 wherein the intermediate section has a portion of relatively constant stiffness therealong.

6. The balloon dilatation catheter of claim 1 wherein the intermediate section includes a metallic member adjacent the proximal guide wire lumen opening.

7. The balloon dilatation catheter of claim 6 wherein the metallic member has a relatively uniform metallic dimension therealong.

8. The balloon dilatation catheter of claim 6 wherein the metallic member is located at least in part around the inflation lumen.

9. The balloon dilatation catheter of claim 6 wherein the metallic member comprises a coil.

10. The balloon dilatation catheter of claim 6 wherein the metallic member has a distal terminal end spaced proximally from the balloon.

11. The balloon dilatation catheter of claim 1 wherein at least a portion of the intermediate section is offset axially relative to the first and second shaft sections.

12. The balloon dilatation catheter of claim 11 wherein the proximal guide wire lumen opening is disposed along that portion of the intermediate section which is offset axially relative to the first and second shaft sections.

13. The balloon catheter of claim 1 wherein the tube is formed from a metallic material.

14. In an elongate dilatation catheter of the type that can be slidably moved along a guide wire that can extend past a distal end of the catheter, wherein the guide wire is received in a guide wire lumen of the catheter, the guide wire extending from a distal guide wire lumen opening to a proximal guide wire lumen opening disposed in a portion of the catheter that is spaced distally from a proximal end of the catheter, the dilatation catheter including an inflatable balloon and an inflation lumen extending through the catheter separate from the guide wire lumen, an improvement comprising:

a tube formed from a relatively stiff material composition, the tube defining a first shaft section having a proximal end and a distal end;

a second shaft section disposed distally of the first shaft section, the second shaft section being relatively more flexible than the first shaft section and having the guide wire lumen extending through a portion thereof; and

an intermediate section disposed between the first shaft section and the second shaft section, the intermediate section including an intermediate member adjacent the proximal guide wire lumen opening which is of diminished dimension relative to the tube such that at least a portion of the intermediate section is more flexible than the first shaft section and less flexible than the second shaft section.

15. The improved catheter of claim 14 wherein the tube is formed from a metallic material.

16. The improved catheter of claim 14 wherein the intermediate metallic member has a relatively uniform metallic dimension therealong.

17. The improved catheter of claim 14 wherein the intermediate metallic member is located at least in part around the inflation lumen.

18. The improved catheter of claim 14 wherein the intermediate metallic member comprises a coil.

19. The improved catheter of claim 14 wherein the intermediate section extends at least in part across the proximal guide wire lumen opening.

20. The improved catheter of claim 14 wherein the proximal guide wire lumen opening is disposed adjacent the proximal end of the second shaft section.

21. The improved catheter of claim 14 wherein the proximal guide wire lumen opening is disposed adjacent the distal end of the first shaft section.

22. The improved catheter of claim 14 wherein the proximal guide wire opening is disposed along the intermediate section.

23. The improved catheter of claim 14 wherein at least a portion of the intermediate section is adopted to impart a stepped transition in flexibility between the first shaft section and the second shaft section.

24. The improved catheter of claim 14 wherein at least a portion of the intermediate section is offset axially relative to the first and second shaft sections.

25. The improved catheter of claim 14 wherein the proximal guide wire lumen opening is disposed along that portion of the intermediate section which is offset axially relative to the first and second shaft sections.

26. In an elongate dilatation catheter which has an inflatable balloon and a inflation lumen extending through the

catheter, wherein the catheter is of the type that can be slidably roved along a guide wire that can extend past a distal end of the catheter through a guide wire lumen of the catheter, wherein the guide wire lumen is separate from the inflation lumen and extends from a distal guide wire lumen opening to a proximal guide wire lumen opening located in a portion of the catheter that is spaced distally from a proximal end of the catheter so that the guide wire lumen is shorter than the inflation lumen, an improvement comprising:

a first proximal shaft section of the catheter defined by a tubing of relatively rigid material;

a second shaft section disposed distally of the first shaft section, the second shaft section being relatively more flexible than the first shaft section; and

a transition section disposed between the first shaft section and the second shaft section and including a metallic element of diminished dimension relative to the tubing, the transition section extending adjacent to the proximal guide wire lumen opening and having an intermediate rigidity to provide a stepped transition between the first shaft section and the second shaft section.

27. The improved catheter of claim 26 in which the tubing is formed from a metallic material.

28. The improved catheter of claim 26 in which the metallic element extends at least in part distally of the proximal guide wire lumen opening.

29. The improved catheter of claim 26 in which the metallic element extends at least in part around the inflation lumen.

30. The improved catheter of claim 26 in which the metallic element comprises a coil.

31. The improved catheter of claim 26 in which the metallic element has a distal terminal end spaced proximally from the balloon.

32. The improved catheter, of claim 26 in which the proximal guide wire lumen opening is disposed adjacent the proximal end of the second shaft section.

33. The improved catheter of claim 26 in which the proximal guide wire lumen opening is disposed adjacent the distal end of the first shaft section.

34. In an elongate dilatation catheter which has an inflatable balloon and an inflation lumen extending through the catheter, wherein the catheter is of the type that can be slidably moved along a guide wire which can extend past a distal end of the catheter through a guide wire lumen of the catheter, wherein the guide wire lumen is separate from the inflation lumen and extends from a distal guide wire lumen opening to a proximal guide wire lumen opening disposed in a portion of the catheter that is spaced distally from a proximal end of the catheter so that the guide wire lumen is shorter than the inflation lumen, an improvement comprising:

a first proximal shaft section of the catheter defined by a tubing of relatively rigid material;

a second shaft section disposed distally of the first shaft section, the second shaft section being relatively more flexible than the first shaft section; and

a transition section disposed between the first shaft section and the second shaft section and extending adjacent to the proximal guide wire lumen opening, the transition section having decreased rigidity relative to the tubing to provide a stepped transition in flexibility between the first shaft section and the second shaft section.

35. The improved catheter of claim 34 in which the tubing is formed from a metallic material.

36. The improved catheter of claim 34 in which the transition section extends at least in part distally of the proximal guide wire lumen opening.

37. The improved catheter of claim 34 in which the transition section extends at least in part around the inflation lumen.

38. The improved catheter of claim 34 in which the transition section comprises a coil.

39. The improved catheter of claim 34 in which the transition section is metallic and of reduced dimension relative to the metallic tube.

40. The improved catheter of claim 34 in which the transition section has a distal terminal end spaced proximally from the balloon.

41. The improved catheter of claim 34 in which the proximal guide wire lumen opening is disposed adjacent the proximal end of the second shaft section.

42. The improved catheter of claim 34 in which the proximal guide wire lumen opening is disposed adjacent the distal end of the first shaft section.

43. In an elongate dilatation catheter of the type that has a relatively long proximal shaft section, a second shorter distal shaft section disposed distally of the first shaft section, an inflatable balloon attached to the distal end of the second shaft section wherein the first and second shaft sections have an inflation lumen defined therethrough so that the balloon is in fluid communication with the inflation lumen, and wherein the catheter is of the type that can be slidably moved along a guide wire which can extend through a guide wire lumen of the catheter, the guide wire lumen being separate from the inflation lumen and extending from a distal guide wire lumen opening at the distal end of the catheter to a proximal guide wire lumen opening adjacent the proximal end of the second shaft section so that the guide wire lumen is shorter than the inflation lumen, an improvement comprising:

the first proximal shaft section of the catheter defined by a tubing of relatively rigid material;

the second shaft section of the catheter being relatively more flexible than the first shaft section and having a relatively short reinforced proximal portion and a relatively long nonreinforced distal portion; and

the reinforced proximal portion including a transition member disposed adjacent to the proximal guide wire lumen opening and extending distally along the second shaft section to provide a reinforcement therefore the transition member including a metallic element having a uniform reduced dimension relative to the tubing as it extends distally along the catheter to provide a stepped transition in rigidity in the distal direction, the transition member having a distal terminal end spaced from the balloon by the length of the nonreinforced distal portion of the second shaft section.

44. The improved catheter of claim 43 in which the tubing is formed from a metallic member.

45. The improved catheter of claim 43 in which the transition member extends at least in part distally of the proximal guide wire lumen opening.

46. The improved catheter of claim 43 in which the transition member extends at least in part around the inflation lumen.

47. The improved catheter of claim 43 in which the transition member comprises a coil.

48. The improved catheter of claim 43 in which the proximal guide wire lumen opening is disposed adjacent the distal end of the first shaft section.

* * * * *