Sept. 28, 1943. E. A. WATSON 2,330,320

CONTACT BREAKER FOR IGNITION APPARATUS

Filed Oct. 27, 1942

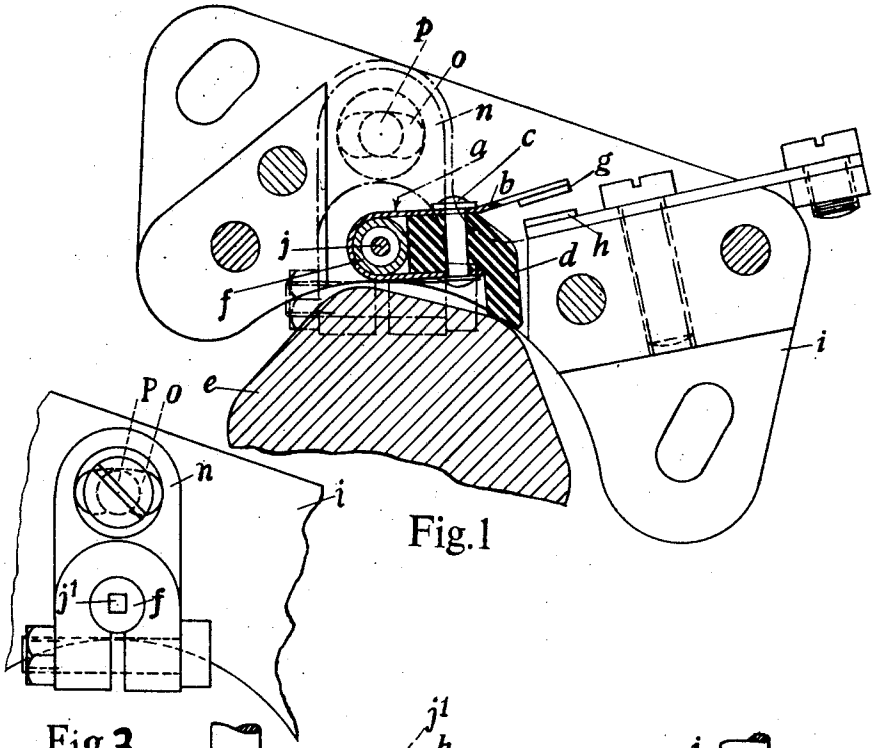

Fig.1

Fig.3.

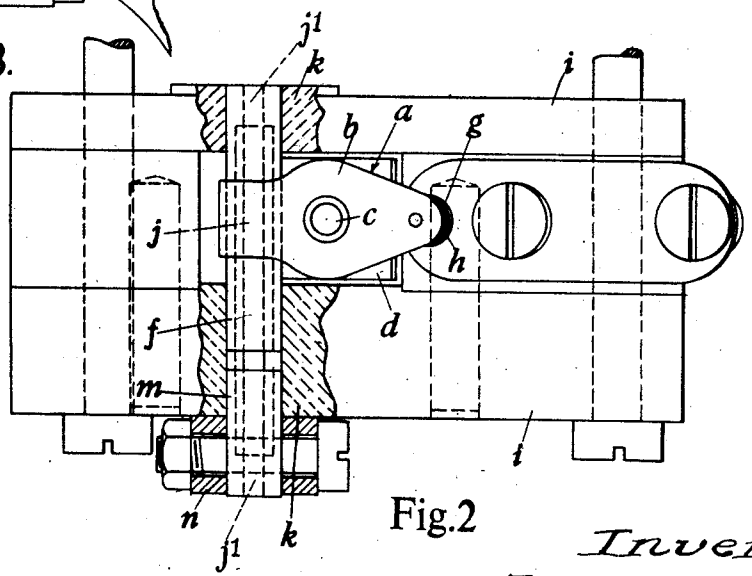

Fig.2

Inventor
E. A. Watson
By Glascock Downing & Seibold
Attys

Patented Sept. 28, 1943

2,330,320

UNITED STATES PATENT OFFICE

2,330,320

CONTACT BREAKER FOR IGNITION APPARATUS

Ernest Ansley Watson, Birmingham, England, assignor to Joseph Lucas Limited, Birmingham, England

Application October 27, 1942, Serial No. 463,531
In Great Britain October 22, 1941

3 Claims. (Cl. 200—30)

This invention relates to the contact breakers used in the primary circuits of high-tension electric ignition apparatus for internal combustion engines.

The object of the invention is to provide an improved contact breaker which is better adapted for high speed operation than those of ordinary construction.

The invention comprises the combination of a small and light lever carrying one of the contact pieces, and a torsion spring in the form of a straight wire arranged coaxially with the lever pivot.

In particular the invention comprises a combination as specified in the preceding paragraph having a hollow lever pivot, and having the spring arranged in part within the pivot, one end of the spring being secured to an angularly adjustable anchorage.

In the accompanying sheet of explanatory drawings—

Figure 1 is a sectional elevation, Figure 2 a part sectional plan, and Figure 3 a fragmentary elevation, of a contact breaker constructed in accordance with the invention.

In carrying the invention into effect as shown, I employ a lever *a* of small dimensions made by bending a metal strip *b* to a U-form, and securing by means of a rivet *c* between the sides of the bent strip one member of a small L-shaped piece *d* of insulating material which serves as the heel for co-operating with the usual actuating cam *e*. The lever pivot *f* is in the form of a short metal tube and this is inserted between the sides and in contact with the closed end of the bent strip *b*, the latter and the pivot being secured together by brazing or in any other convenient manner. The movable contact piece *g* which is required to co-operate with a stationary contact piece *h* is secured to an end of the strip *b* which extends beyond the heel above-mentioned, the stationary contact piece being mounted on an adjustable support *i*.

One end of the tubular pivot *f* is closed, and to this end is secured one end of a spring in the form of a straight torsion wire *j* which is situated in part within and coaxially with the pivot. The two ends of the pivot *f* are supported in any convenient bearings *k* on the support *i*, and in one of these bearings is arranged coaxially with the adjacent end of the pivot a short tube *m* forming an anchorage to which is secured the other end of the torsion wire *j*. The ends *j'* of the torsion wire *j* may be of square or other convenient section to enable them to be securely attached to the corresponding parts *f*, *m*. To the outer projecting end of the anchorage tube *m* is secured a lever *n* through a slot *o* in which is inserted a screw *p* for adjustably securing the lever to the adjacent face of the support *i*. The initial straining of the spring formed by the torsion wire *j* is effected by appropriate angular adjustment of the lever *n*.

To enable a high rate of operation of a contact breaker to be obtained it is necessary to make the contact lever as small and light as possible, and to employ a spring having a high natural frequency of vibration. By my invention I am able to satisfy these conditions in a very simple and convenient manner. The invention is not however limited to the particular example above described as subordinate details of construction may be varied to suit different requirements.

Having thus described my invention what I claim as new and desire to secure by Letters Patent is:

1. A contact breaker for electric ignition apparatus, comprising the combination of a small and light contact-carrying lever, and a torsion spring in the form of a straight wire arranged coaxially with the lever pivot.

2. A contact breaker for electric ignition apparatus, comprising the combination of a small and light contact-carrying lever having a pivot of hollow form, a torsion spring in the form of a straight wire arranged coaxially with and in part within the lever pivot, and an angularly adjustable anchorage to which one end of the spring is secured.

3. A contact breaker as claimed in claim 2, in which the lever pivot and spring anchorage each have the form of a short tube, the two tubes being arranged coaxially with each other.

ERNEST ANSLEY WATSON.