Dec. 8, 1964 H. W. FAEBER 3,160,413

METHOD AND APPARATUS FOR SUPPORTING STACKS OF SIGNATURES

Filed Jan. 31, 1961 2 Sheets-Sheet 1

FIG. 1

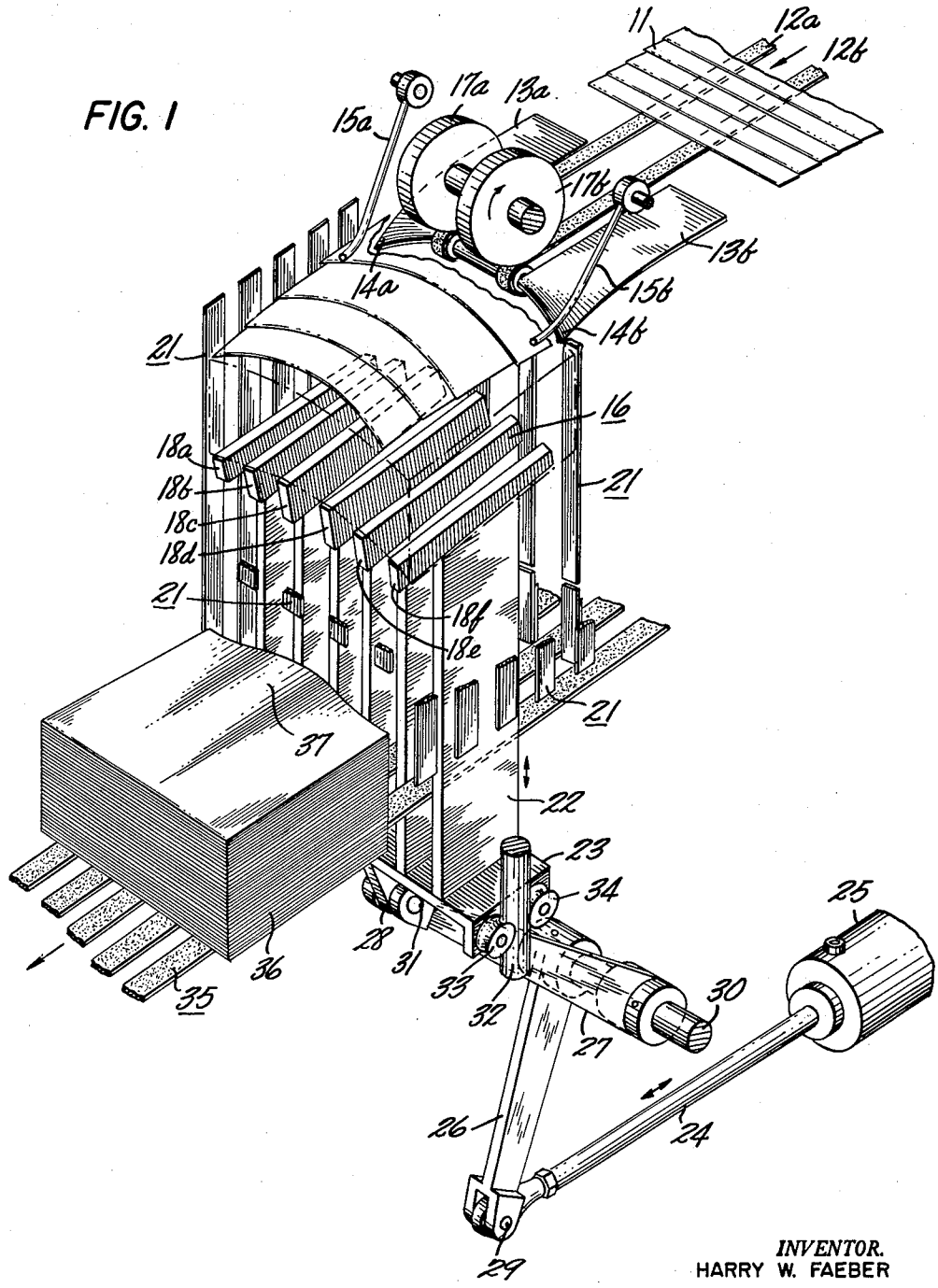

INVENTOR.
HARRY W. FAEBER

BY
Brumbaugh, Free, Graves & Donohue

his ATTORNEYS

Dec. 8, 1964 H. W. FAEBER 3,160,413

METHOD AND APPARATUS FOR SUPPORTING STACKS OF SIGNATURES

Filed Jan. 31, 1961 2 Sheets-Sheet 2

FIG. 2

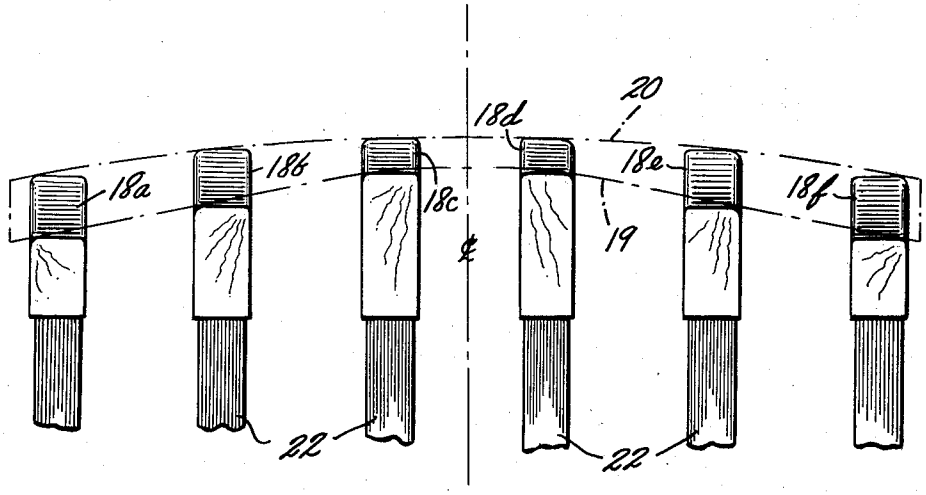

FIG. 3

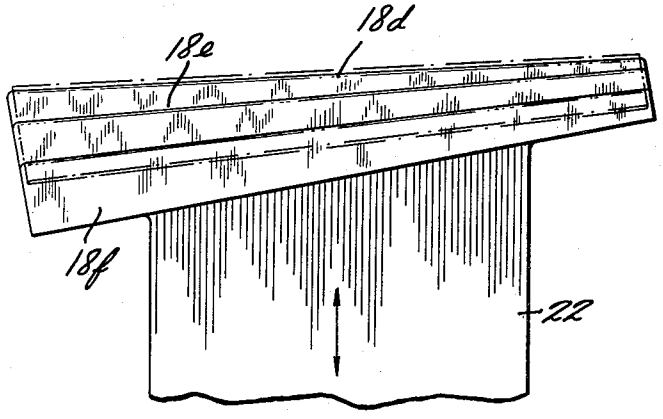

INVENTOR.
HARRY W. FAEBER

BY
Brumbaugh, Free, Graves & Donohue
his ATTORNEYS

United States Patent Office 3,160,413 Patented Dec. 8, 1964

3,160,413

METHOD AND APPARATUS FOR SUPPORTING STACKS OF SIGNATURES

Harry W. Faeber, Larchmont, N.Y., assignor to Time, Incorporated, New York, N.Y., a corporation of New York

Filed Jan. 31, 1961, Ser. No. 86,199
14 Claims. (Cl. 271—86)

This invention relates to the handling of materials and, more particularly, to apparatus for providing support for a stack or pile of folded sheets of paper or the like.

The invention finds particular application in the printing industry in which folded sheets of paper, generally referred to as "signatures," are stacked one on top of another to form space saving piles or stacks of signatures. In order to facilitate subsequent handling operations, it is desirable that such stacks or piles be rigid and have substantially level top surfaces. Generally, however, the the top surface of a stack of signatures is not level, but is curved. That is, because the leaves of the signature near the folded edge do not lie flat against each other, but tend to separate, the side of the stack that is composed of the folded signature edges is normally curled upward. This results in a loss of rigidity in the stack, and also prevents the effective piling of completed stacks of signatures, one on top of the other, to save space.

One way of compensating for this curling effect is to provide mechanism for specially stacking signatures one on top of the other so that the folded signature edges are alternated between opposite sides of the stack. This, however, generally requires elaborate, complex, expensive, and cumbersome machinery. Also, it is impractical if the stacked signatures are to be handled at a later stage by automatic machinery, for example, collating apparatus.

In view of the above, it is an important object of the present invention to support signatures during the formation of a typical stack in such fashion as to impart rigidity to the stack and to remove almost entirely the "curl" in the top surface thereof resulting from the appreciably thicker folded portions of the component signatures.

This important object is fulfilled in the present invention by, first, providing a greater space than that which is usually allocated to build the folded portion of a stack and, second, by "arching" the signatures, i.e., by bending the signatures so that their folded edges are curved downward, thus to crease the folded edges more sharply and to counteract the tendency to curl upwards. This is accomplished in an illustrative embodiment of the invention by providing a supporting platform for a stack of signatures during its formation that utilizes a sloping and arched surface. To elaborate, the supporting platform slopes downwardly, and the stack is built thereon so that the folded edges of the signatures are positioned directly above the lowermost portion of the sloping platform. By allowing the side of the stack that consists of the folded signature edges to occupy a greater space than that occupied by the opposite side, the tendency to curl is not aggravated.

Besides being sloped, however, the supporting platform is also arched. Viewing the platform so as to look toward the side of the stack consisting of the folded signature edges, the platform resembles a portion of a side of an ellipse. Generally the platform may be said to resemble a C rotated through 90 degrees, thus to position its open portion to face downward. In this fashion, the lowermost signatures of the stack are not supported by a plane surface but, rather, are allowed to "drape" so that the folds are "broken" and an arched signature

shape is produced instead. The arch provides rigidity to the stack, and the tendency for the folded portions of the signatures to curl upward is eliminated. Thus, a rigid stack of signatures having a substantially level top surface is produced.

When the signatures are transferred in stacked relation from the supporting structure described above to a level supporting platform, the top of the stack generally remains level, retaining the slight arch to provide rigidity, even though the bottom of the stack no longer is supported by the sloping, arched platform. Accordingly, the unique "molding" of the signature stack during the stacking process, as described above, results in the formation of a stack of signatures that is both stable and substantially level on top. Furthermore, this is accomplished without the use of complex, expensive, and cumbersome equipment.

Although the invention has been described above in general terms, a better understanding of it may be obtained by consulting the following detailed description when taken in conjunction with the appended drawings, in which:

FIGURE 1 is a perspective view of the preferred embodiment of this invention shown in conjunction with typical signature conveying equipment;

FIGURE 2 is an end view of a portion of the structure shown in FIGURE 1; and

FIGURE 3 is a side view of the structure shown in FIGURE 2.

Referring now to FIGURE 1, a series of signatures **11** in overlapped or shingled fashion, with their folded edges lying forward in the direction of travel shown by the arrow, are conveyed on a conveyor terminating in a pair of belts **12***a* and **12***b*. The belts, whose movement is controlled by a powered driving source (not shown), convey the shingled signatures over a pair of guide plates **13***a* and **13***b*. The guide plates, whose tip portions **14***a* and **14***b* are bent downward, together with a pair of guide fingers **15***a* and **15***b*, tend to arch the signatures as they are deposited upon a platform **16** by the action of the belts and a pair of driving wheels **17***a* and **17***b*. Rollers may be used at the ends of guides **15***a* and **15***b* and guide plates **14***a* and **14***b* to reduce friction.

As may be seen from FIGURE 1, the platform is composed of a series of parallel fingers **18***a* through **18***f* that are inclined and which together provide an arched support for the signatures. The details of the supporting fingers are shown in FIGURES 2 and 3.

Referring to FIGURE 3, it may be seen that each of the fingers is inclined to a substantial degree. By so sloping the fingers, the side of the stack of signatures consisting of the folded signature edges that are positioned over the lowermost ends of the fingers is allowed a greater height in which to be built than the opposite side. Thus, the thicker folded signature edges are accounted and compensated for, and the stack remains substantially flat on top as it is built up.

FIGURE 2, an end view of the fingers **18**, shows how the fingers also provide an arched support for the stack of signatures, thus to "break" the folded signature edges and to drape the signatures so that an arch is built therein that adds rigidity to the stack. As may be seen, the lowermost ends of all the fingers define a first arched curve **19**, whereas the uppermost ends of the fingers define a second arched curve **20** of less curvature than curve **19**. In this fashion, the folded signature edges, which are placed directly above the lowermost portions of the fingers, are allowed to drape more than the opposite unfolded edges. By thus providing two different arched curves, the thicker folded signature edges are compensated for, and the stack is built so that the correct arch will be provided therein.

Returning to FIGURE 1, the supporting fingers **18** are

enclosed by a series of guide bars 21 which contain and shape the sides of the stack of signatures. The guide bars may be adapted for lateral movement by suitable means coupled thereto (not shown) in order to "jog" the stack of signatures to form a well aligned stack.

The fingers 18 are conveniently mounted on a series of vertical supports 22 that are in turn attached to a horizontal plate 23. The up and down movement of plate 23, imparting vertical movement to the support fingers 18 as the stack of signatures is built thereon, is controlled by the movement of a piston 24 which is part of an air cylinder 25. The horizontal movement of the piston, as shown by the arrow, is translated into vertical movement of the plate 23 by a series of arms 26, 27, and 28 that are journaled about the shafts 29, 30, and 31, respectively. The vertical movement of the plate 23 and of the vertical supports 22 attached thereto is guided by a pair of vertical rods 32 (only one of which is shown), each of which is embraced by a pair of lower rollers 33 and 34 attached to plate 23 and a similar pair of rollers attached to the upper portion of vertical support 22 (not shown).

As the stack of signatures is built upon the support fingers, the fingers are lowered until the stack is completed thereon. Transfer of the stack is made to a series of conveyor belts 35 by a further lowering of the support fingers so that they pass through the belts. The completed stack of signatures 36, although transferred to a flat surface that is neither sloping nor arched, nonetheless contains a slight arch 37 that imparts rigidity to the stack. Further, because of the manner in which the stack was formed, the stack is not only stable, but is substantially level on its top surface, thereby facilitating further operations such as compacting and later stacking of completed stacks of signatures one on top of another.

When the signature stream approaches with open end leading, the configuration of the support fingers is reversed by installing them in a position rotated from that shown in FIGURE 1 by 180° about a vertical axis.

From the description of the invention given above, it is apparent that numerous substitutions, additions, and rearrangements of the preferred embodiment shown may be made by those skilled in the art. Such changes should be deemed to be within the scope of the following claims which define this invention.

I claim:

1. In apparatus for the handling of folded sheets of paper, a platform for supporting said sheets comprising a series of parallel displaced fingers, each of said fingers being inclined with respect to a horizontal plane, all of the lower disposed ends of said fingers together forming a pattern corresponding substantially to a portion of the side of a first ellipse when said lower disposed ends are viewed in a direction substantially perpendicular thereto, all of the upper disposed ends of said fingers together forming a pattern corresponding substantially to a portion of the side of a second ellipse when said under disposed ends are viewed in a direction substantially perpendicular thereto, said portion of said first ellipse having greater curvature than said portion of said second ellipse.

2. A structure for the support of a stack of folded sheets of paper comprising a plurality of parallel disposed fingers each of which is inclined with respect to a horizontal reference plane, said fingers comprising at least a first pair and a second pair of fingers, said first pair of fingers lying adjacent to each other and having lower disposed ends that lie in a first lower horizontal plane, said second pair of fingers having lower disposed ends that lie in a second lower horizontal plane below said first horizontal plane, each of said fingers comprising said second pair lying adjacent to a different one of said fingers comprising said first pair, the distance between said fingers of said second pair being greater than the distance between said fingers of said first pair.

3. Apparatus as recited in claim 2 in which said first pair of fingers have upper disposed ends that lie in a first upper horizontal plane, said second pair of fingers have upper disposed ends that lie in a second upper horizontal plane below said first upper horizontal plane, and the distance between said first and second lower horizontal planes is greater than the distance between said first and second upper horizontal planes.

4. Apparatus for the support of a stack of signatures, the stack being of such a size normally resulting in a curling of the top surface of the stack, comprising a platform upon which said stack is positioned, the shape of said platform being such that substantially each point along a first edge of said platform lies at a level that is lower than the level at which each opposite point on an opposite edge lies, the difference in levels between any two opposite points increasing for points on the first edge from the mid-portion of said first edge to each end thereof.

5. Apparatus for the support of a stack of folded sheets, the stack being of such a size normally resulting in a curling of the top surface of the stack, comprising a platform upon which said stack is positioned, the shape of said platform being such that it is inclined downwardly and arched downwardly substantially transversely to said inclination.

6. Apparatus as recited in claim 5 in which said arched platform is defined by a first arched curve at the bottom of said incline and a second arched curve at the top of said incline, said first arched curve having greater curvature than said second arched curve.

7. The method of supporting a stack of folded sheets comprising supporting substantially the entire bottom surface of the lowermost sheet of said stack in inclined and draped fashion so that, first, all points on the folded edge of said lowermost sheet are supported at levels lower than the levels at which the points opposite on the unfolded edge are supported, and so that, second, said lowermost sheet is draped while being supported to bend said folded edge downward with respect to said stack built thereon and to provide a rigid arch in said stack.

8. The method of forming a stack of folded sheets of paper comprising the steps of supporting substantially the entire bottom surface of a first sheet so that it comprises an arched surface, said arched surface being such that the mid-portion of the folded edge of said first sheet is supported at a first level and succeeding points along said folded edge from said mid-portion to an adjacent edge of said first sheet are supported at succeedingly lower levels, and stacking succeeding sheets on top of said first sheet with the folded edges of said succeeding sheets and said first sheet aligned substantially perpendicularly while continuing to support said first sheet.

9. The method of forming a stack of folded sheets of paper comprising the steps of supporting a first sheet at an inclined angle with a horizontal reference plane, the folded edge of said first sheet being positioned so that points thereon are lower than the points opposite on the unfolded edge of said sheet, supporting the mid-portion of said folded edge of said first sheet at a first level, supporting succeeding points along said folded edge from said midportion to an adjacent edge of said first sheet at succeedingly lower levels than said first level, and stacking succeeding sheets one on top of the other on top of said first sheet so that the folded edges of said succeeding sheets and said first sheet are aligned substantially perpendicularly.

10. In apparatus for stacking folded sheets of paper utilizing delivery means for ejecting said sheets one by one from a conveyor system to a platform positioned below said conveyor system, means for facilitating said stacking comprising plate means positioned adjacent said conveyor system in contacting arrangement with said sheets for bending said sheets downwardly to assume an arched shape prior to ejection upon said platform, whereby said arched sheets counteract the tendency of said sheets to curl upward, and a stack-supporting platform

surface that is inclined downwardly and arched downwardly substantially transversely to said inclination.

11. In combination with apparatus as recited in claim 10, finger means positioned adjacent said plate means for exerting pressure on the edges of said ejected sheets thereby to continue to arch said sheets downwardly.

12. In an apparatus for handling a stack of folded signatures having their folded edges one above the other, a platform on which the signatures are stacked to avoid upward curling of the folded edges, the upper surface of said platform being sloped downwardly from the portion which supports the open ends of the signatures toward the portion which supports the folded edges thereof, said downward slope compensating for the increased thickness of the folded edges of the stack, the lower end of the downwardly sloped platform surface being, in turn, higher at the center and sloping downwardly on both sides of the center so that the folded edge of the lowermost signature in the stack will be supported in an inclined position with the folded edge below the open ends and with the folded edge arched higher at the center and draping downwardly on both sides of the center, the signatures higher in the stack progressively approaching a level condition.

13. The apparatus set forth in claim 12 including means for feeding the signatures seriatim, folded edges first, to the platform so as to progressively build up the stack on the platform surface, and deflector means interposed in the path of travel of the signatures to the platform to arch the leading folded edge by deflecting the leading folded edges downwardly at both ends before the signature is stacked.

14. The apparatus set forth in claim 12 in which the platform comprises a plurality of spaced-apart elements mounted on a common support.

References Cited in the file of this patent

UNITED STATES PATENTS

734,058	Bennett et al.	July 21, 1903
1,147,482	Cheshire	July 20, 1915
1,685,799	Baker	Oct. 2, 1928
1,750,396	Evans et al.	Mar. 11, 1930
2,147,964	Cherymisin	Feb. 21, 1939
2,279,269	Tornberg	Apr. 7, 1942
2,359,417	Hand	Oct. 3, 1944
2,426,957	Trump	Sept. 2, 1947
2,645,476	Wood et al.	July 14, 1953
2,770,192	Mitchell et al.	Nov. 13, 1956
2,885,205	Sillen	May 5, 1959
2,989,305	Smith	June 20, 1961
2,991,075	Wheeler et al.	July 4, 1961