Dec. 7, 1954 I. E. KNICKERBOCKER 2,696,605

GUN RELOADER TESTING INSTRUMENT

Filed June 28, 1945

Fig. 1.

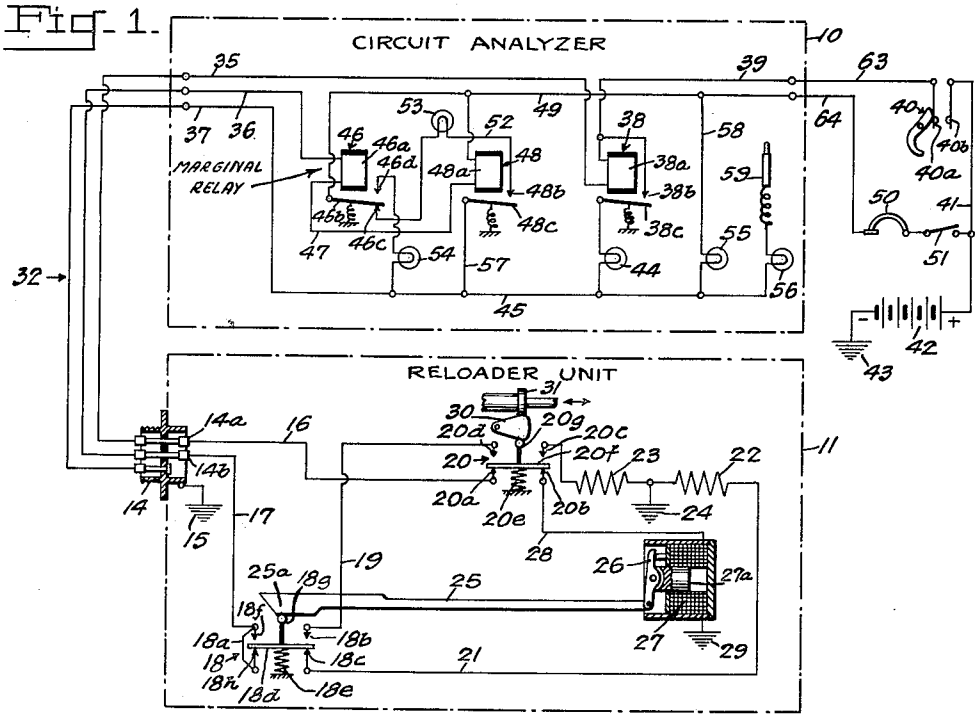

Fig. 2.

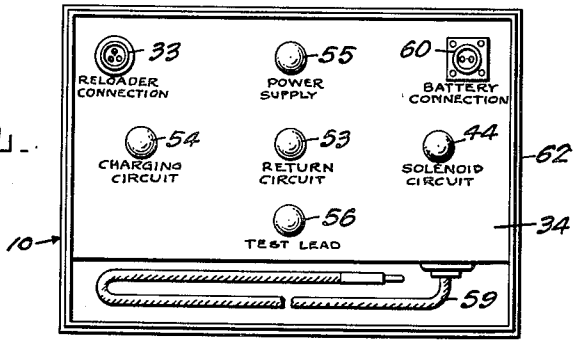

Fig. 3.

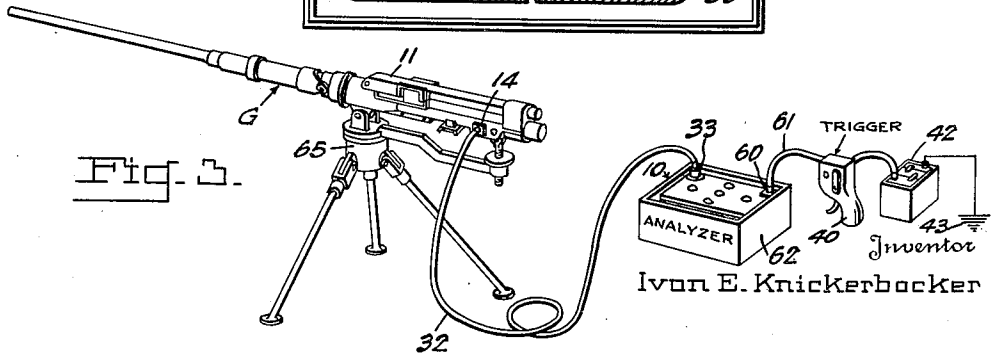

Inventor
Ivan E. Knickerbocker

By C. E. Herrstrom & H. E. Thibodeau
Attorneys

United States Patent Office 2,696,605
Patented Dec. 7, 1954

2,696,605

GUN RELOADER TESTING INSTRUMENT

Ivan E. Knickerbocker, Havre de Grace, Md.

Application June 28, 1945, Serial No. 602,139

9 Claims. (Cl. 340—213)

(Granted under Title 35, U. S. Code (1952), sec. 266)

The invention described herein may be manufactured and used by or for the Government for governmental purposes without the payment to me of any royalty thereon.

This invention relates to instruments for testing the operating circuits of guns.

Certain types of guns such as the E3 .60 calibre machine gun, are adapted, either for manual or automatic firing. When automatic firing is desired, or is required by the location of the gun, as in the wing of an aircraft, the cable and cross pin in the cover, used in manual reloading and firing, are replaced by a reloader drive unit. In general, this unit consists of a motor, a lead screw connected to be driven by the motor and an adapter group including a ball bearing nut that engages and rides upon the lead screw. As the lead screw is rotated by the motor on a power stroke, the adapter group is driven backwards along the screw, picking up the cam tube drive bushing, thus cocking the gun and at the same time compressing the drive spring and effecting a switching action to reverse the motor and lead screw. This acts to return the adapter group to the front end of the lead screw.

Firing is accomplished by energizing a firing solenoid situated at the back of a buffer block and having an armature attached to a link bar that, in turn, is attached to the sear mechanism. When the solenoid is energized, the link bar is thereby moved rearwardly, thus depressing the sear and freeing the bolt so that the latter moves forwardly under influence of the drive spring, to fire the gun.

A so-called "telltale group" and switch housing assembly are attached to the link bar. The telltale group includes parts that engage the firing bolt and indicate whether or not the bolt is in its latched position. A return switch group is located on the buffer block. This group controls the direction of rotation of the motor and is operated by part of the drive unit, including the aforementioned drive spring. The buffer block also carries a lower contact group that provides for simple electrical connections between the motor and receiver parts. A 24-volt battery is used to supply the power for driving the motor and energizing the solenoid and connections from the battery to the gun are made by suitable plug connections.

It will thus be appreciated that each gun, when equipped for automatic firing, incorporates several electrical circuits, each of which must be properly connected and operating for correct operation of the gun. It will also be apparent that, should the gun not operate properly, because of a faulty circuit, the location of the trouble may be a complicated and troublesome job, particularly if the gun is located in an inaccessible spot, such as the wing of an aircraft. In fact, it has heretofore been necessary at times to completely remove the gun from its mounting and to disassemble the reloader, before faulty connections could be located.

It is therefore an object of my invention to provide a testing instrument whereby the drawbacks formerly present in locating faulty circuits in the gun, are overcome.

It is a further object to provide an instrument, or circuit analyzer that may be quickly and easily connected between the source of current supply for the gun and the automatic reloader unit.

A still further object is to provide a testing instrument as aforesaid, wherein the various circuits may be energized as in the normal operation of the gun, and a positive indication obtained as to whether or not each individual circuit is in proper operating condition.

Another object is to provide an analyzer as aforesaid wherein a faulty circuit, once located, can be traced back, section by section until the defective portion of the circuit is positively located, and one that does not require any modification or change of existing equipment.

Other objects and advantages will become apparent as the description proceeds.

In the drawing:

Figure 1 is a wiring diagram showing the electrical parts and wiring connections of the invention, in circuit between the reloader unit of a .60 calibre machine gun and the trigger and source of current supply of the gun.

Figure 2 is a plan view of the plug connection and lamp panel of a preferred form of the invention, and

Figure 3 is a view showing a machine gun with the tester or analyzer connected in the firing circuit thereof.

Referring in detail to the drawing, the parts of the analyzer proper are located within the outlines of the dot-dash line **10**, while the parts of the reloader unit of the gun to be tested, are located within the confines of the dot-dash line **11**.

The reloader unit includes a two-pole receptacle **14** that, as shown at Fig. 3, is positioned at an accessible location at the side of the gun. The metallic case of this receptacle is grounded to the gun itself, as indicated at **15**, and forms a convenient return for the various circuits as they are closed. The two poles of the receptacle are connected to leads **16** and **17**, respectively. Lead **17** is connected to one terminal **18***f* of a double-contact, double-throw switch **18** having one pair of opposed poles **18***f* and **18***h* connected, as by a lead **18***a*. Of the remaining pair of poles of switch **18**, one, **18***b*, is connected by a line **19** to one terminal **20***d* of a second double-contact, double-throw switch **20**, while the other pole **18***c* is connected by a line **21** to one terminal of the power stroke field coil **22** of the reloader motor, previously mentioned. The motor itself is a series-wound machine of a conventional type, having a double field winding that will rotate the armature in respectively opposite directions. The return stroke field coil of the motor is shown at **23**, and it will be noted that ends of the two coils are connected through armature to ground at **24**. The remaining terminal of coil **23** is connected to one terminal **20***c* of switch **20**.

Switch bar **18***d* of switch **18**, is urged by a spring **18***e* into a position connecting contacts **18***f* and **18***b*, and is adapted to be moved against the action of said spring by an actuating arm **18***g*. This arm is moved by a link bar **25** provided at one end with a cam section **25***a*. Link bar **25** has its other end pivoted to a solenoid arm or lever **26**, pivotally connected at its midportion with plunger **27***a* of a solenoid **27**, so that, when energized, solenoid **27** acts to translate link **25** to the right, as shown upon Fig. 1 and to cause cam **25***a* to release arm **18***g*. Whereupon spring **18***e* moves the contact bar of switch **18** to close the circuit between contacts **18***b* and **18***f*, and open the circuit between contacts **18***c* and **18***h* in a manner obvious from inspection of the drawings.

Firing solenoid **27** has one terminal connected to a lead **28** from one contact **20***b* of switch **20**. The other terminal is grounded, as shown at **29**. The switch bar **20***f* of switch **20** is urged by a spring **20***e* into a position connecting contacts **20***c* and **20***d* in which position the circuit through return field coil **23** is closed. An actuating arm **20***g* is mounted upon the switch bar **20***f* and is positioned to be engaged by a pivoted switch arm **30** when moved by translation of a switch cam **31**. Thus when arm **30** is pivoted bar **20***f* is moved against the action of spring **20***e*, to open the circuit between contacts **20***c* and **20***d*, and to close the circuit between contacts **20***a* and **20***b*. Lead **16** connects contact **20***a* with one pole **14***a* of receptacle **14**.

As shown, a three-wire cable **32** has a plug fitting receptacle **14**. This cable extends to the analyzer **10** and is there provided with a second plug adapted to fit a receptacle **33**, shown at Fig. 2 as conveniently positioned upon a panel **34** of the instrument whereby the respective wires of cable **32** may be connected to service leads **35**, **36** and **37** of the analyzer, the connections being so arranged that lead **35** is connected to lead **16** in the reloader, lead **36** to **17**, and lead **37** to the ground at **15**.

Lead **35** is connected to one terminal of a coil **38***a* of

relay 38, the other terminal of said coil being connected by leads 39 and 63 to one terminal 40*a* of a trigger switch 40, the other terminal 40*b*, being connected by a lead 41 to one terminal of a source of D. C. such as battery 42. The other terminal of battery 42 is grounded at 43.

Relay 38 has a contact 38*b* connected to lead 39 through which a circuit to lamp 44 is closed when coil 38*a* is energized to attract armature 38*c*. The other terminal of lamp 44 is connected to ground lead 37 through a lead 45. It will be clear therefore, that with the reloader switch 20 in the depressed position shown, lamp 44 will light when trigger switch 40 is closed, in case the circuit through firing solenoid 27 is in proper operating condition.

Lead 36 is connected to one terminal of a coil 46*a* of relay 46. The other terminal of this coil is connected by a lead 47 with a terminal of coil 48*a* of relay 48. The remaining terminal of coil 48*a* is connected to a lead 49 that connects with one terminal of battery 42 through a lead 64, a single pole thermal cut-out 50 and a safety switch 51. The armature 46*b*, with coil 46*a* de-energized, is spring-urged against a contact 46*c* that is connected to a lead 52 having a lamp 53 and connected with contact 48*b* of relay 48. Relay 46 is a double pole unit and its other armature contact 46*d* is connected to one terminal of a lamp 54 having its other terminal connected to ground lead 45.

Relay 48 is a single pole unit having its armature 48*c* spring-urged to open position and connected by lead 57 with ground lead 45. A power supply lamp 55 is in a lead 58 connecting leads 49 and 45. A test lamp 56 has one terminal connected to ground line 45 and its other terminal to an elongated flexible conductor having a testing contact at its end, whereby various parts of a circuit may be tested as desired.

Connections from terminal 40*a* of switch 40 and from circuit breaker 50, to leads 39 and 49, respectively, of the analyzer are made by way of a standard two-lead plug and socket connection 60 and cable 61.

A convenient arrangement of the receptable and lamps upon panel 34, is shown at Fig. 2. This panel is removably mounted within a container 62 of any suitable construction. The panel 34 is somewhat less in width than container 62, so as to form a chamber within which test conduits 59 may be housed when not in use.

It will be understood that, when the reloader and the gun controlled thereby are in actual use, leads 63 and 64 from switch 40 and cut-out 50, respectively, are directly connected to the gun by connecting the plug of cable 61 directly into the receptacle 14 on the reloader. Therefore, to connect the analyzer for use, all that it is necessary to do, is to remove the plug of cable 61 from its socket 14 on the reloader and insert it into receptacle 60 on test panel 34, then plug one end of cable 32 into receptacle 33 on test panel 34, and the other into receptacle 14 on the reloader. The analyzer is then ready for use. Figure 3 shows a .60 calibre machine gun G, having a reloader 11 applied thereto, and mounted upon a test stand 65. The electrical connections via cable 32, analyzer 10, cable 61, trigger 40, to battery 42, are obvious from inspection of the figure.

Figure 1 shows the reloader and the gun with bolt in forward position, solenoid not energized and switch 40 open. Safety switch 51 is closed, lamp 55 is energized by way of cut-out 50, leads 64 and 58 to ground through 45, thus indicating that connections have been properly made and that the battery is in charged condition. Lamp 55 remains lighted throughout the test.

Trigger switch 40 is now closed, and current flows through leads 63, 39, coil 38*a*, leads 35, 16, reloader switch bar 20*f*, and lead 28, to firing solenoid 27 and ground 29. Therefore, provided the firing circuit of the reloader is in proper condition, coil 38*a* of the analyzer is energized, and armature 38*c* is moved into engagement with contact 38*b*, to thus energize lamp 44 in a manner obvious from inspection of Fig. 1. Energization of solenoid 27 operates link 25 which in turn is fastened to sear mechanism, not shown. Operation of the sear frees the bolt of the gun which moves forward under influence of the drive spring to fire the gun. At the same time, switch bar 18*d* is released to close contacts 18*f* and 18*b*, and open contacts 18*h* and 18*c*.

Upon depression of switch bar 18*d*, current flows by way of leads 64, 49, coil 48*a*, lead 47, coil 46*a*, leads 36, 17, and 18*a*, bar 18*d*, and lead 21, to power stroke field coil 22 of the reloader motor and ground at 24, to thereby start the motor, rotate the lead screw of the gun, and thereby operate parts not shown, to cock the gun. Therefore, if the circuit through the power field of the motor is in satisfactory condition, relay coil 48*a* will be energized and its armature 48*c* will move to engage contact 48*b*. This action is without effect at this time, since coil 46*a* is simultaneously energized and acts to attract armature 46*a*, and open contact at 46*c*. However, actuation of armature 46*b*, as aforesaid closes contact 46*d* and energizes lamp 54 by way of leads 64 and 49, armature 46*b*, contact 46*d* and lamp 54 to ground lead 45. If this lamp lights therefore, under the conditions mentioned, a positive indication is given that the power field circuit of the motor is operating properly.

As soon as the motor has rotated sufficiently on its power stroke to cock the gun, switch cam 31 is moved to release switch bar 20*f* which thereupon moves under influence of spring 20*e* to open contacts 20*a* and 20*b*, and to close contacts 20*d* and 20*c*. Also, link bar 25 is moved to the right by bolt engagement of telltale group, thus permitting bar 18*d* to close contacts 18*f* and 18*b*. Under these conditions, the return field coil 23 of the reloader motor is energized by way of leads 64, 49, coil 48*a*, lead 47, coil 46*a*, leads 36, 17, contact 18*f*, bar 18*d*, contact 18*b*, lead 19, contact 20*d*, bar 20*f*, and contact 20*c* to return field coil 23 and ground at 24. It will be understood that less current is required to operate the motor on its return stroke than upon its power stroke. This fact is utilized by making relay 46 so that its armature will be moved upon the power stroke, but not upon the return stroke. Under the conditions being discussed, therefore, armature 48*c* makes contact at 48*b* while armature 46*b* makes contact at 46*c*. Lamp 53 is now lighted by way of leads 64, 49, armature 46*b*, contact 46*c*, lamp 53, lead 52, contact 48*b*, armature 48*c*, and lead 57 to ground lead 45. Lighting of lamp 53 as aforesaid, gives positive indication that the return stroke circuit of the motor is in satisfactory condition.

In case any lamp fails to light, the corresponding reloader circuit can be traced back section by section by means of test conductor 59, until lamp 56 fails to light thereby positively locating the defective part. Thus it will be seen that I have provided a tester or analyzer that, while relatively simple and easy to connect and operate, gives positive indication during the normal operation of the gun, whether or not each of the circuits is in operating condition. It is thus possible to locate and remedy faulty circuits without dismounting the gun.

While I have disclosed a form of the invention now preferred by me, changes and modifications will be apparent to those skilled in the art. For example, various types of indicating or signalling devices may be substituted for lamps 44, 53, 54, etc. I wish it understood therefore, that I reserve all such changes, alterations, and substitutions of equivalents as fall within the scope of the subjoined claims.

Having now fully described and disclosed my invention, what I claim as new, and desire to secure by Letters Patent it:

1. In an analyzer for the electrical circuits of a machine gun, a lead adapted to be grounded to said gun, first and second relays, said first relay having double contacts and an armature operable to alternatively close said contacts, said second relay having a single contact, a power lead adapted to be connected to said gun and including in series the coils of said first and second relays, a connection between said leads and including a signal device, the armature, and one contact of said first relay, and a second connection between said leads including in series a second signal device, the armature and other contact of said first relay and the contact of said second relay, said second relay being responsive to flow of current less than that required to operate said first relay.

2. In a circuit analyzer, first and second supply leads, a ground lead, all said leads being adapted to be connected to a machine gun to be tested, first, second and third relays, said first supply lead including the coil of said third relay, said second supply lead including the coils of said first and second relays in series, a first connection between said first lead and ground lead including a signal device and the contact of said third relay, a connection between said second supply lead and said ground lead, including contacts of said first and second relays and a signal device in series, and a manually operable trigger switch between

said first supply lead and a source of electrical energy, said first relay being operable only by current in excess of that required to operate said second relay.

3. In an analyzer for the reloader circuits of machine guns, first and second supply leads each adapted to be connected at one end to a source of electrical energy and at the other end to respective ones of said reloader circuits, a ground lead, first, second and third relays, each having a coil, an armature, and contacts closed upon actuation of said armatures by the respective coils, the coils of said first and second relays being connected in series in said second supply lead, the coil of said third relay being connected in the first of said supply leads, a connection between said first supply lead and ground including a first signal device and a contact of said third relay in series, a connection between said second lead and said ground lead, including a second signal device and one contact of said first relay in series, and a third connection between said second lead and said ground lead, including a third signal device, another contact of said first relay, and a contact of said second relay, in series, said first relay being energized to close its said one contact and thereby to energize said second signal device, only in response to current in said second supply lead in excess above a predetermined value greater than that required for operation of said second relay.

4. A device for testing the firing circuits of machine guns, comprising a lead adapted for connection to a source of electrical energy at one end, and to a circuit of said gun at its other end, a first relay having double contacts, a second relay having at least one contact, said relays connected to be energized by current through said lead, a ground lead, a connection between said leads, including in series a first signal device and one contact of said first relay, and a second connection between said leads including in series the other contact of said first relay, a second signal device, and the contact of said second relay, said first relay being biased to close said other contact when de-energized, said second relay being responsive to flow of current less than that required to operate said first relay.

5. In combination with a machine gun reloader having a firing solenoid, an operating motor with forward and reverse coils, and circuits for said solenoid and coils including first and second switches, an analyzer comprising a first lead insertable between a source of electrical energy and said first switch to energize one said motor coil or said solenoid upon operation of said first switch to respective positions, a ground lead, a relay having a coil in said first lead, and a connection between said leads including the contact of said relay and a first signal device, in series, a second lead insertable between a source of electrical energy and said second switch, to connect the source to the other of said motor coils or to said first switch, a pair of relays having their coils in series in said second lead, a connection between said second lead and ground lead, including one contact of a first relay of said pair and a second signal device, another connection between said second lead and said ground lead, including a second contact of said first relay of said pair, a third signal device, and a contact of the other relay of said pair, said first relay being responsive to flow of current through one of said motor coils only, said second switch being connected for operation by and upon energization of said solenoid.

6. In combination with a machine gun having a motor with forward and reverse coils, and switch means operable to position closing circuits to said coils respectively, an analyzer including a lead adapted to be connected between a source of power and said switch means, first and second relays having their coils in series in said lead, a ground lead, a first connection between said leads including one contact of said first relay and a lamp, a second connection between said leads including a second contact of said first relay, a second lamp and a contact of said second relay, in series, said second relay being responsive to flow of current less than that required to operate said first relay, whereby one lamp is lighted in one position of said switch means and the other lamp is lighted in the other position of said switch means.

7. A testing instrument for machine guns having a reloader motor with power and return field coils, first and second relays, a power lead, a ground lead, a service lead to said motor, said relays having their coils connected in series between said power lead and said service lead, said first relay having an armature connected to said power lead, and first and second contacts adapted to be alternatively engaged by said armature, a first signal means adapted to be connected between said power lead and said ground lead through said armature and first contact, and a second signal means adapted to be connected between said power lead and said ground lead through said second contact and an armature-controlled contact of said second relay, in series, said first relay being responsive only to flow of current greater than that required to operate said second relay.

8. The combination with a machine gun having a firing solenoid and a driving motor having a field coil in series with a switch adapted to be operated by and in response to energization of said solenoid, a source of potential, first, second and third relays, a first circuit connecting in series said source, the coils of said first and second relays, said switch and field coil, said first relay having first and second contacts, a second circuit including the coil of said third relay and said firing solenoid, in series, a first signal connected to be energized in response to closure of said second circuit and energization of said solenoid, a second signal operable by closure of said first circuit in response to actuation of said switch by said solenoid as aforesaid, to thereby energize said first relay and close its first contact, and a third signal connected in a series circuit including the second contact of said first relay and the contact of said second relay, said first relay operating to open its said second contact and to close its said first contact, only in response to current in said first circuit above a predetermined value, whereby said second and third signals are energized only in response to current in said first circuit above and below said predetermined value, respectively, and a firing switch in said second circuit.

9. The combination with a source of electrical energy and a machine gun having a firing solenoid, a reloader motor provided with a field coil, a switch for said field coil and means operated by said solenoid when energized, to close said switch, of a circuit analyzer comprising first and second relays, first circuit means adapted to connect said source and the coil of said first relay in series with said field coil through said switch, second circuit means connecting said source and the coil of said second relay in series with said solenoid, signal means connected to be operated by said second relay in response to closure of said second circuit, and signal means connected to be operated by and in response to energization of said first relay coil as said first circuit means is closed by said switch in response to energization of said solenoid.

References Cited in the file of this patent

UNITED STATES PATENTS

Number	Name	Date
2,047,408	Emery et al.	July 14, 1936
2,370,621	Freitag	Mar. 6, 1945