May 11, 1965 J. SALLY 3,182,619

AUTOMATIC GUIDED SEWING MACHINE

Filed Aug. 21, 1962 2 Sheets-Sheet 1

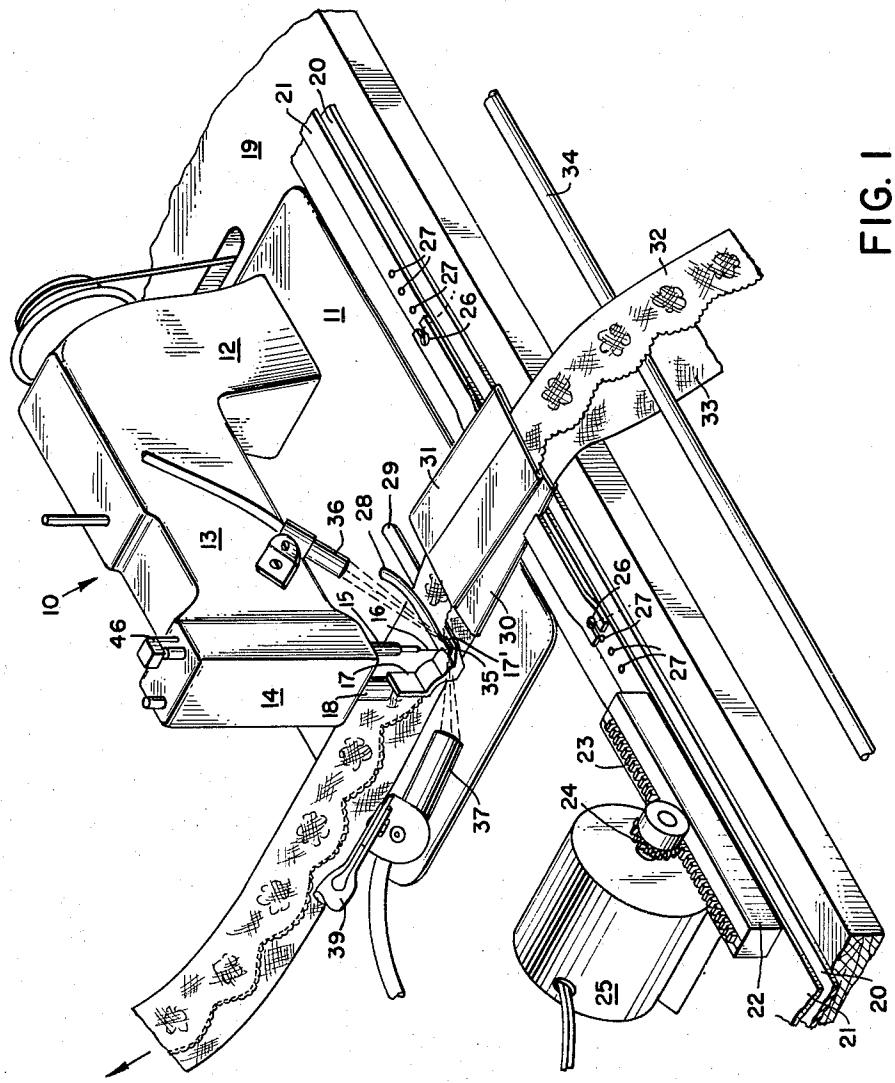


FIG. 1

INVENTOR.
JOHN SALLY

BY Thomas E. Backenbach

ATTORNEY

May 11, 1965 J. SALLY 3,182,619

AUTOMATIC GUIDED SEWING MACHINE

Filed Aug. 21, 1962 2 Sheets-Sheet 2

FIG. 2

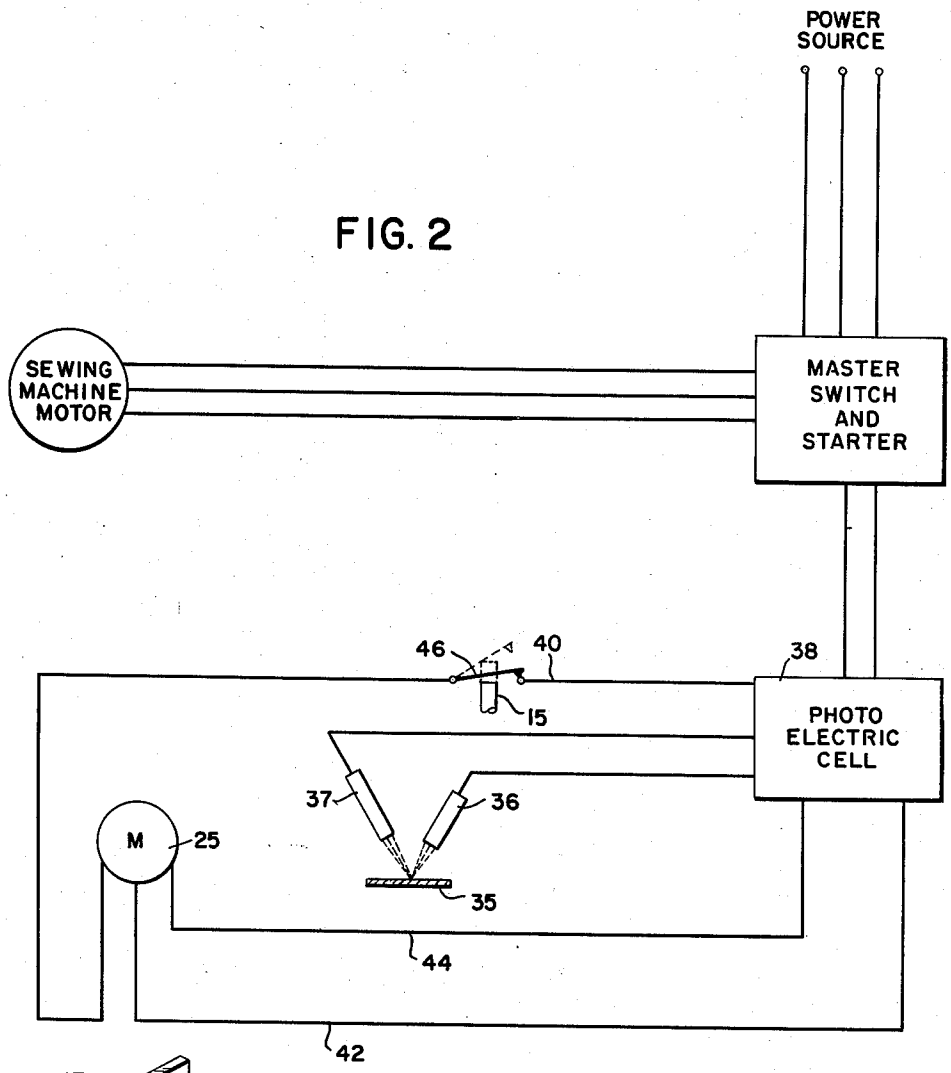


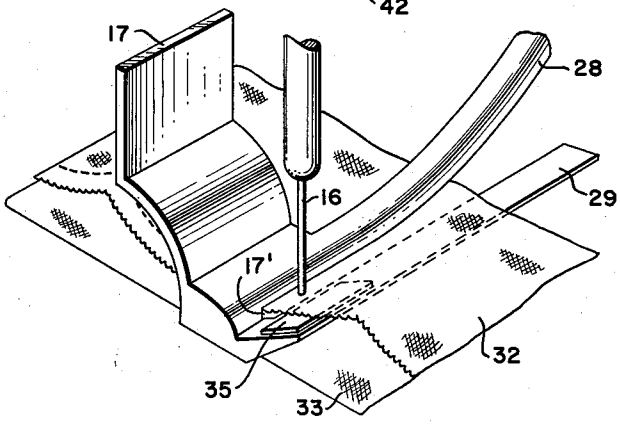


FIG. 3

INVENTOR.
JOHN SALLY

BY

ATTORNEY

United States Patent Office 3,182,619 Patented May 11, 1965



3,182,619

# AUTOMATIC GUIDED SEWING MACHINE

John Sally, West New York, N.J., assignor to Superior Petticoat Co., Inc., New York, N.Y., a corporation of New York

Filed Aug. 21, 1962, Ser. No. 218,246
7 Claims. (Cl. 112—203)

This invention relates to a sewing machine, and more particularly to an automatically guided work feed control for joining textile fabric, by sewing, along a predetermined outline paralleling and following the contour of the edge of the fabric, whether such edge is curved, angular, straight, or in any way irregularly shaped.

It is quite well known that where a fabric having an irregular edge is joined, by sewing, to another fabric, reliance upon a skilled operator who manually guides the pieces of material to be joined is necessary. It at once becomes evident that the operator can operate but a single machine, thus maintaining high labor costs. It has also been the experience in the art that unless the operator is highly skilled in feeding and guiding an irregularly shaped edge of the fabric being sewn, an excessive amount of spoilage can generally be expected.

It is therefore an object of the present invention to provide a completely automatic device in a sewing machine which is adapted to permit continuous sewing of one piece of fabric having an irregular edge to a second piece of fabric.

Another object of the present invention is to provide a guiding device in a sewing machine whereby pieces of fabric material may be joined along the edges thereof regardless of whether the configurations of the edge of the fabric are simple or complex.

A further object of this invention is the provision of a guiding apparatus in a sewing machine which will cause a line of stitching to follow the edges of a piece of fabric, whether curved, angular, straight, or irregularly shaped, being fed into a sewing machine.

Another object of the present invention is to provide an improved guiding device, for feeding fabric to be stitched and having an irregular edge into a sewing machine, which is relatively simple and inexpensive in construction and operation, and which can be adapted for use with a conventional sewing machine.

In accomplishing the foregoing and other objects of the present invention, there is provided a reciprocating, movable guide, mounted upon a work surface, adapted to feed a fabric into sewing position in a conventional sewing machine. A reversing motor, geared to the movable guide and responsive to a photoelectric controlled energizing circuit, controls the reciprocating movement of the guide upon a transverse plane as the fabric is fed into sewing position in the machine.

Other and further objects and advantages of the present invention will be apparent to those versed in the art from the following description of an embodiment of the invention illustrated in the drawings in which like characters refer to like parts in the several views and in which:

FIG. 1 is a perspective view of an automatic guided sewing apparatus according to the present invention utilized in conjunction with a conventional sewing machine,

FIG. 2 is a schematic diagram of the electrical circuit of the automatic guided sewing device, and

FIG. 3 is an enlarged isometric view of a portion of FIG. 1.

Referring now to the drawings, the embodiment of the present invention is comprised of a sewing machine **10**, having a base **11** upon which there is mounted a standard **12** with an arm **13** carrying the usual sewing head **14** at the free end thereof. The sewing head **14** has the usual needle bar **15** carrying the conventional sewing needle **16**. A presser foot **17** as provided, having fabric guards **28** and **29** mounted at the lower end of a presser foot bar **18**. The base **11** is particularly adapted to comprise conventional feed dogs (not shown), such as are exemplified in the patent to Milligan et al. (U.S. Pat. No. 3,072,081), for feeding a plurality of fabric strips, to be described hereinafter, to the sewing head **14**.



Mounted in front of, and parallel to the front of base **11** upon a work surface **19**, there is provided a track **20** upon which there is slidably seated a carriage **21** for reciprocating movement parallel to the front base **11**. At one end of said carriage **21** there is provided a supporting member **22** mounting a rack gear **23** engageable with a pinion gear **24** driven by a reversing motor **25**. Energization of reversing motor **25**, presently to be described, imparts a reciprocating movement to rack gear **23** enabling it to move upon a transverse plane. Adjustably mounted upon carriage **21** by screws **26** within spaced apertures **27**, or by other securing means, there are provided guide members **30**, **31**, transversely disposed with respect to carriage **21**, forward of presser foot **18**. Guide members **30**, **31** are adapted to retain the fabric material in a desired position for feeding into the sewing machine, and each is comprised of an elongated, rigid folded member adapted to receive for traversal between said fold comparatively narrow fabric strips fed therethrough and into the sewing machine. Said guides may also be a channel-like member or may assume a configuration complementary to the material being attached. In the present invention, for purposes of example only, said guide members **30**, **31** are illustrated as elongated folded members, one member **31** thereof carrying a lace-like fabric **32** having an irregular edge, and the other member **31** carrying fabric **33** to which it is to be joined. The guide member **31** is particularly adapted to guide the fabric **32** to and between the guard **28** and the guard **29** while the guide **30** is particularly adapted to guide the fabric **33** to and between the base **11** and the guard **29**. The presser foot **17** is provided with a slot **17'** particularly adapted to be disposed in generally vertical alignment with the needle **16**, enabling the needle to join or sew together the fabrics **32**, **33**. A presser foot guide bar **34** for properly directing fabrics **32**, **33** into guide members **30**, **31** is further provided.

A light reflecting member, such as a mirror **35**, or the like, is particularly adapted to be fixedly positioned upon the guard **29** in any suitable manner. The position of the mirror relative to the needle **16** is of particular importance. The mirror **35** preferably should be positioned forwardly of the needle, that direction being defined by the direction of travel of the fabrics **32**, **33** through the machine **10**, and laterally to either one or the other side thereof, depending upon the position of that one of the fabrics adapted to traverse the mirror, such as the fabric **32**, with respect to the needle **16**. Thus, if the fabrics **32**, **33** are directed through the machine **10** in the direction indicated in FIG. 1 by the arrow, then the mirror **35** preferably is positioned so that the fabric **32**, for example, as indicated above, traverses the same before it traverses or passes under the needle. The mirror is, accordingly, disposed forwardly thereof. And, if the fabric **32** is disposed so that the irregular edge thereof is to pass to the left of the needle **16**, in the absence of the present invention, when viewing the machine **10** in the direction indicated by the arrow in FIG. 1, then the mirror **35** preferably is disposed to the left of the needle, construing that terminology in its normal and accepted sense. A beam of light from a light source **36** mounted upon arm **13** is directed to the mirror **35** and reflected to a light sensing device **37** mounted upon a support **39** adapted to carry an impulse to a photo-electric cell **38**.

With particular reference now to FIG. 2, it will be seen that the light source supplies a beam of light which is reflected by the mirror **35** to illuminate the sensing device **37**, thus generating and thence transmitting a first impulse or signal to a photoelectric cell **38**. The cell may be of any suitable construction, particularly adapted to alternately close one of a plurality of circuits depending upon whether the sensor **37** is illuminated or it receives a darkened signal. The first impulse or signal received by the cell **38** enables the latter to close a first circuit, comprising a common line **40**, and another line **42**. When the beam of light through the sensor **37** is interrupted, a second impulse is generated and transmitted to the cell, enabling the latter to complete a second circuit, comprising the common line **40** and another line **44**. It can be seen, therefore, that the reversing motor **25**, which may be of any suitable conventional construction, and the cell **38**, are each of them operatively associated with and within the first and second circuits.

The carriage is particularly adapted to be reversibly reciprocated longitudinally of the machine **10** by the motor **25**, enabling the members **30** and **31** to maintain the irregular edge of that one of the fabrics **32**, **33** presenting such an edge in sewing alignment or substantially immediate juxtaposition relative to the needle **16**. To this end, when a portion of substantial transverse dimensional extent of the fabric presenting such an edge is disposed in overlying or superimposed relationship relative to the mirror **35**, the beam of light is interrupted. The cell **38** is now particularly adapted to receive the aforesaid second signal, completing one of the first and second circuits, comprising at least the common line **40**, causing the rotative movement of the motor **25**, in one of a plurality of directions, and reciprocating the carriage **21**, and, thus the guide members **30**, **31** generally towards the right, when viewed in the direction of the arrow in FIG. 1. However, when a portion of brief transverse dimensional extent of the fabric traverses the mirror **35**, the latter is uncovered. The beam of light from the source **36** is now transmitted to the receiver **37**, the latter generating the aforesaid first signal that is transmitted to and received by the cell **38**. The cell **38**, having received the first impulse, is particularly adapted to complete the other of the first and second circuits, comprising at least the common line **40**, causing rotative movement of the motor **25** in another of said plurality of directions, and reciprocating the carriage **21**, and, thus, the guide members **30**, **31** generally towards the left when viewed in the direction of the arrow in FIG. 1.

It can be seen, therefore, that the position of the mirror **35** relative to the needle **16**, as described above, is of particular importance. Especially important is the positioning of the mirror generally forwardly of the needle **16**, that direction being defined, as pointed out above, by the direction of the fabrics **32**, **33** as they traverse the machine **10**. In this manner, the operations described above will be completed by the time a particular substantially instantaneous location of the fabrics pass the location of the mirror and arrive at the location of the needle **16**. Thus, every substantially infinitesimal segment of the irregular edge will be disposed in immediate juxtaposition or sewing alignment with respect to the needle. The machine **10** of the present invention will accordingly unusually efficiently and reliably follow the contour of such an irregular edge, regardless of the particular configuration thereof.

A switch **46**, which may be of any suitable construction, is particularly adapted to be disposed in the common line **40**, and, accordingly, in operative association with each of the first and second circuits, between the cell **38** and the motor **25**. The switch **46** preferably is so constituted and arranged as to be in an open position when the needle **16** is disposed in its lowermost position, joining or sewing together the fabrics **32** and **33**, enabling the breaking or opening of that one of the circuits closed or completed by the cell **38** when the needle is in such position. This is of particular significance when it is realized that, in the absence of the switch **46**, the fabrics **32** and **33** will direct a force against the needle **16**, when the latter is in a sewing or joining position, because of the continued reversible reciprocations of the carriage **21**, and the guide members **30** and **31** positioned thereupon. The switch, however, results in incremental reversible reciprocations of the carriage, each increment providing for or presenting a delay that occurs when the needle is in such lowermost or joining position. Accordingly, any force is precluded from being directed against the needle, precluding further any distortion of the fabrics **32**, **33**. It is to be understood, however, that, while the switch **46** causes the intermittent operation of the motor **25**, resulting in the absence of any movement of the fabrics laterally of the direction of travel thereof through the machine **10**, the machine remains operative and the fabrics continue to move through or traverse the machine, in the direction indicated by the arrow in FIG. 1.



Although the present invention has been described with respect to a sewing machine, it is within the ambit herein that applicability can be likewise made to staplers, heat and pressure sealing machines and other devices in which it is desirable to move the work beneath a tool in accordance with a predetermined edge.

I claim:

1. In a sewing machine comprising a stitching mechanism, work feeding apparatus for continuously disposing the irregular edge of at least one fabric, to be joined to at least another fabric, in sewing juxtaposition relative to the stitching mechanism thereof, comprising:

guide means particularly adapted to receive said fabrics and individually guide the same forwardly of said machine as the fabrics are fed towards said stitching mechanism;

reversible reciprocating means for incrementally reciprocating said guide means laterally of the direction of advance of said fabrics, enabling the irregular edge of that one of said fabrics presenting the same to be continuously disposed in sewing juxtaposition relative to said stitching mechanism, to join said fabrics together along a line of stitching continuously substantially adjacent the said irregular edge;

means responsive to the varying lateral position of said irregular edge relative to said stitching mechanism for reversibly reciprocally actuating said reciprocating means; and

means responsive to the position of said stitching mechanism relative to said fabrics for causing the reversible reciprocal movements of said reciprocating means to occur in increments, enabling said fabrics to be incrementally reversibly reciprocated laterally of the direction of advance of said fabrics precluding the application of any force by said stitching mechanism thereagainst.

2. In a sewing machine as defined in claim 1, wherein:

said reciprocating means comprises:

a track;

a carriage;

said carriage and said track being slidably mutually cooperatively engageable one with respect to the other; and

reversible means particularly adapted to be supplied with electrical energy and structurally operatively associated with said carriage for reversibly reciprocating the same relative to said track;

said guide means being structurally operatively associated with said carriage for reversible reciprocal movements therewith laterally of the direction of advance of the said fabrics.

3. In a sewing machine as defined in claim 2, wherein there is provided:

adjustable means for varying the position of said guide means longitudinally of said carriage, particularly

enabling the irregular edge of that one of said fabrics presenting the same to be substantially aligned relative to the said stitching mechanism.

4. In a sewing machine as defined in claim 3, wherein:

said means for reversibly reciprocally actuating said reciprocating means comprises:

a source of artificial illumination;

receiving and generating means for receiving the artificial illumination eminating from the said source thereof, and for generating at least a first and second impulse;

means for transferring the artificial illumination from the said source thereof to said receiving and generating means, enabling the generation of said first and second impulse depending upon the position of the irregular edge of that one of the fabrics presenting the same relative to said transferring means;

means responsive to the first and second impulses generated by said receiving and generating means for reversibly rotatably actuating the reversible means of said reciprocating means; and

circuit means extending between and structurally operatively associating said transfer means and said reversible means.

5. In a sewing machine as defined in claim 4, wherein:

said circuit means comprises:

a first circuit; and

a second circuit;

each of said first and second circuits comprising a line common to each; and

said means for causing the reversible reciprocal movements of said reciprocating means to occur in increments is structurally operatively associated with said common line.

6. In a sewing machine as defined in claim 5, wherein:

said transfer means is disposed forwardly of said stitching mechanism as defined by the direction of advance of said fabrics with respect thereto.

7. In a sewing machine comprising a stitching mechanism, work feeding apparatus for continuously disposing the irregular edge of at least one fabric, to be joined to at least another fabric, in sewing juxtaposition relative to the stitching mechanism thereof, comprising:

guide means particularly adapted to receive said fabrics and individually guide the same forwardly of said machine as the fabrics are fed towards said stitching mechanism;

reversible reciprocating means for incrementally reciprocating said guide means laterally of the direction of advance of said fabrics, enabling the irregular edge of that one of said fabrics presenting the same to be continuously disposed in sewing juxtaposition relative to said stitching mechanism, to join said fabrics together along a line of stitching continuously substantially adjacent the said irregular edge, said reciprocating means comprising:

a track;

a carriage;

said carriage and said track being slidably mutually cooperatively engageable one with respect to the other; and

reversible means particularly adapted to be supplied with electrical energy and structurally operatively associated with said carriage for reversibly reciprocating the same relative to said track;

said guide means being structurally operatively associated with said carriage for reversible reciprocal movements thereof laterally of the direction of advance of the said fabrics;

adjustable means for varying the position of said guide means longitudinally of said carriage, particularly enabling the irregular edge of that one of said fabrics presenting the same to be substantially aligned relative to the said stitching mechanism;

means responsive to the varying lateral position of said irregular edge relative to said stitching mechanism for reversibly reciprocally actuating said reciprocating means, said means comprising:

a source of artificial illumination;

receiving and generating means for receiving the artificial illumination eminating from the said source thereof, and for generating at least a first and second impulse;

means for transferring the artificial illumination from the said source thereof to said receiving and generating means, enabling the generation of said first and second impulse depending upon the position of the irregular edge of that one of the fabrics presenting the same relative to said transfer means;

said transfer means being disposed forwardly of said stitching mechanism as defined by the direction of advance of said fabrics with respect thereto;

means responsive to the first and second impulses generated by said receiving and generating means for reversibly rotatably actuating the reversible means of said reciprocating means; and

circuit means extending between and structurally operatively associating said transfer means and said reversible means, said circuit means comprising:

a first circuit; and

a second circuit;

each of said first and second circuits comprising a line common to each; and

means responsive to the position of said stitching mechanism relative to said fabrics for causing the reversible reciprocal movements of said reciprocating means to occur in increments, enabling said fabrics to be incrementally reversibly reciprocated laterally of the direction of advance of said fabrics precluding the application of any force by said stitching mechanism thereagainst;

said increment causing means being structurally operatively associated with and disposed within the said common line.


**References Cited by the Examiner**

UNITED STATES PATENTS

| | | | |
|---|---|---|---|
| 2,971,483 | 2/61 | Cordier | 112—205 |
| 3,072,081 | 1/63 | Milligan et al. | 112—2 |
| 3,080,836 | 3/63 | Clemens et al. | 112—203 X |


JORDAN FRANKLIN, *Primary Examiner.*

DAVID J. WILLIAMOWSKY, *Examiner.*