(12) INTERNATIONAL APPLICATION PUBLISHED UNDER THE PATENT COOPERATION TREATY (PCT)

(19) World Intellectual Property Organization
International Bureau

(43) International Publication Date
6 December 2012 (06.12.2012)

WIPO | PCT

(10) International Publication Number
WO 2012/166791 A2

(51) **International Patent Classification**:
F21V 23/00 (2006.01) ***H05B 37/00*** (2006.01)

(21) **International Application Number**:
PCT/US2012/039984

(22) **International Filing Date**:
30 May 2012 (30.05.2012)

(25) **Filing Language**: English

(26) **Publication Language**: English

(30) **Priority Data**:
13/152,772 3 June 2011 (03.06.2011) US

(71) **Applicant** *(for all designated States except US)*: **CREE, INC.** [US/US]; 4600 Silicon Drive, Durham, NC 27703 (US).

(72) **Inventors; and**

(75) **Inventors/Applicants** *(for US only)*: **VAN DE VEN, Antony, Paul** [AU/CN]; D45 Marina Cove, 380 Hiram's Highway, Hong Kong (CN). **ATHALYE, Praneet, Jayant** [IN/US]; 104 Button Road, Morrisville, NC 27560 (US). **HARRIS, Michael, James** [US/US]; 205 Yorkhill Drive, Cary, NC 27513 (US).

(74) **Agent**: **GUSTAFSON, Vincent, K.**; Jenkins, Wilson, Taylor & Hunt, P.A., Suite 1200, University Tower, 3100 Tower Boulevard, Durham, NC 27707 (US).

(81) **Designated States** *(unless otherwise indicated, for every kind of national protection available)*: AE, AG, AL, AM, AO, AT, AU, AZ, BA, BB, BG, BH, BR, BW, BY, BZ, CA, CH, CL, CN, CO, CR, CU, CZ, DE, DK, DM, DO, DZ, EC, EE, EG, ES, FI, GB, GD, GE, GH, GM, GT, HN, HR, HU, ID, IL, IN, IS, JP, KE, KG, KM, KN, KP, KR, KZ, LA, LC, LK, LR, LS, LT, LU, LY, MA, MD, ME, MG, MK, MN, MW, MX, MY, MZ, NA, NG, NI, NO, NZ, OM, PE, PG, PH, PL, PT, QA, RO, RS, RU, RW, SC, SD, SE, SG, SK, SL, SM, ST, SV, SY, TH, TJ, TM, TN, TR, TT, TZ, UA, UG, US, UZ, VC, VN, ZA, ZM, ZW.

(84) **Designated States** *(unless otherwise indicated, for every kind of regional protection available)*: ARIPO (BW, GH, GM, KE, LR, LS, MW, MZ, NA, RW, SD, SL, SZ, TZ,

[Continued on next page]

(54) Title: LIGHTING DEVICES WITH INDIVIDUALLY COMPENSATING MULTI-COLOR CLUSTERS

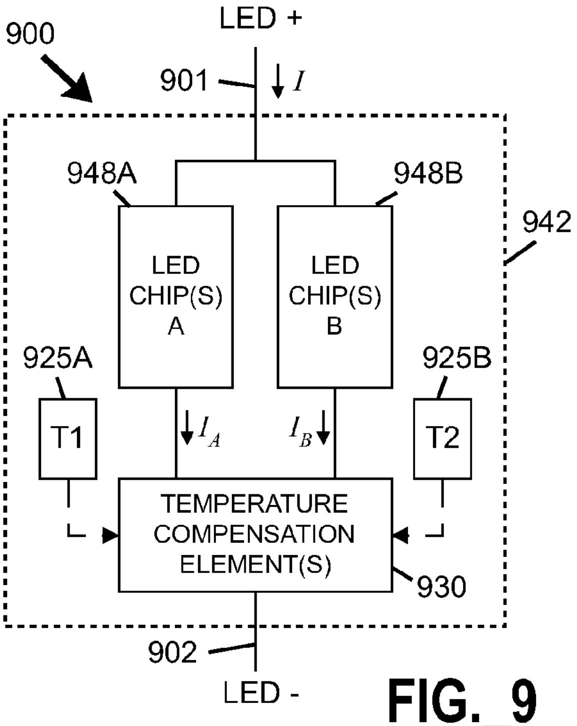

FIG._9

(57) Abstract: A lighting device includes multiple solid state emitter (e.g., LED) chips of different colors mounted on a single submount, at least one temperature sensing element arranged to sense temperature of the LED chips, and at least one temperature compensation circuit element mounted on the single submount to maintain output emissions at a substantially constant color point over a range of different temperatures. Such a device may include a blue LED arranged to stimulate a yellow lumiphor and a red LED, arranged in combination to yield warm white light. Multiple separately temperature compensated clusters of solid state emitters may be provided in a single lighting device, which may include an elongated body structure.

WO 2012/166791 A2

UG, ZM, ZW), Eurasian (AM, AZ, BY, KG, KZ, RU, TJ, TM), European (AL, AT, BE, BG, CH, CY, CZ, DE, DK, EE, ES, FI, FR, GB, GR, HR, HU, IE, IS, IT, LT, LU, LV, MC, MK, MT, NL, NO, PL, PT, RO, RS, SE, SI, SK, SM, TR), OAPI (BF, BJ, CF, CG, CI, CM, GA, GN, GQ, GW, ML, MR, NE, SN, TD, TG).

Published:

— *without international search report and to be republished upon receipt of that report (Rule 48.2(g))*

LIGHTING DEVICES WITH INDIVIDUALLY COMPENSATING MULTI- COLOR CLUSTERS

STATEMENT OF RELATED APPLICATION(S)

[0001] This application claims priority to U.S. Patent Application No. 13/152,772 filed on June 3, 2011.

TECHNICAL FIELD

[0002] The present invention relates generally to lighting devices involving temperature compensation and methods for making and using such lighting devices.

BACKGROUND

[0003] Solid state light sources may be utilized to provide colored (e.g., non-white) or white LED light (e.g., perceived as being white or near-white). White solid state emitters have been investigated as potential replacements for white incandescent lamps due to reasons including substantially increased efficiency and longevity. Longevity of solid state emitters is of particular benefit in environments where access is difficult and/or where change-out costs are extremely high.

[0004] A solid state lighting device may include, for example, at least one organic or inorganic light emitting diode ("LED") or a laser. A solid state lighting device produces light (ultraviolet, visible, or infrared) by exciting electrons across the band gap between a conduction band and a valence band of a semiconductor active (light-emitting) layer, with the electron transition generating light at a wavelength that depends on the band gap. Thus, the color (wavelength) of the light emitted by a solid state emitter depends on the materials of the active layers thereof. Solid state light sources provide potential for very high efficiency relative to conventional incandescent or fluorescent sources, but solid state light sources present significant challenges in simultaneously achieving good efficacy, good color reproduction, and color stability (e.g., with respect to variations in operating temperature).

[0005] The term chromaticity is applied to identify the color of the light source regardless of the output intensity (e.g., lumens). When the chromaticity of different light sources is equal, the color of the light from each light source appears the same to the eye regardless of the intensity. The chromaticity of a light source may be represented by chromaticity coordinates. An example of such coordinates is embodied in the 1931 CIE 1931 chromaticity diagram, in which the color of the emitted light is represented by x and y coordinates. Color coordinates that lie on or near the black-body locus yield pleasing white light to a human observer. The 1931 CIE Diagram (FIG. 1) includes temperature listings along the blackbody locus (embodying a curved line emanating from the right corner).

[0006] Color temperature of a light source is the temperature of an ideal black-body radiator that radiates light of a comparable hue to that of the light source. An incandescent light bulb approximates an ideal black-body radiator; as such as bulb is heated and becomes incandescent, it first glows reddish, then yellowish, then white, and finally bluish (because wavelength associated with the peak radiation of the blackbody radiator becomes progressively shorter with increased temperature). Other light sources such as fluorescent lamps and LED lamps, emit light primarily by processes other than thermal radiation, such that the emitted radiation does not follow the form of a black-body spectrum. These sources are assigned a correlated color temperature (CCT), which is the color temperature of a black body radiator to which human color perception most closely matches the light from the lamp. The terms “color temperature” and “correlated color temperature” may be used interchangeably herein.

[0007] Because light that is perceived as white is necessarily a blend of light of two or more colors (or wavelengths), no single light emitting diode junction has been developed that can produce white light. White light production from solid state emitters requires multiple solid state emitters of different colors and/or some combination of at least one solid state emitter and at least one lumiphoric material (also known as a lumiphor, including for example, phosphors, scintillators, and lumiphoric inks).

[0008] Light perceived as white or near-white may be generated by a combination of red, green, and blue (“RGB”) solid state emitters (e.g., LEDs). Output color of such a device may be altered by separately adjusting supply of current to the red, green, and blue LEDs. Another method for generating white or near-white light is by using a blue LED and a lumiphor such as a yellow phosphor. In the latter case, a portion of the blue LED emissions pass through the yellow phosphor, while another portion of the blue LED emissions is downconverted to yellow, and the blue and yellow light in combination provide light that is perceived as white. Still another approach for producing white light is to stimulate phosphors or dyes of multiple colors with a violet or ultraviolet LED source.

[0009] When multiple solid state emitters and/or lumiphors are used in a single lighting device, the CCT and intensity (lumens) of the lighting device may depend on many factors, including (for example), operating temperature of the emitting components, age of the emitting components, and batch-to-batch variations in production of the emitting components.

[0010] A representative example of a white LED lamp includes a package of a blue LED chip (e.g., made of InGaN and/or GaN) combined with a lumiphoric material such as a phosphor (e.g., YAG:Ce) that absorbs at least a portion of the blue light (first peak wavelength) and re-emits yellow light (second peak wavelength), with the combined yellow and blue emissions providing light that is perceived as white or near-white in character. If the combined yellow and blue light is perceived as yellow or green, it can be referred to as 'blue shifted yellow' ("BSY") light or 'blue shifted green' ("BSG") light. Color temperatures over 5,000K are called cool colors (bluish white), while lower color temperatures (2,700–3,000 K) are called warm colors (yellowish white through red). When a BSY emitter is used, addition of red spectral output from a red solid state emitter (e.g., LED) or red lumiphoric material may increase the warmth of the aggregated light output. The integration of red LEDs into a blue LED BSY ("BSY+R") lighting device improves color rendering and better approximates light produced by incandescent lamps.

[0011] When red supplemental LEDs are used in combination with high-power primary blue LEDs (e.g., as embodied in BSY components), it can be challenging to maintain aggregated emissions of such combination at a constant color point. Red LEDs include active regions typically formed of Group III phosphide (e.g., (Al,In,Ga)P) material, in contrast to blue LEDs, which include active regions typically are formed of Group III nitride materials (e.g., represented as (Al,In,Ga)N, including but not limited to GaN). Group III phosphide materials typically exhibit substantially less temperature stability than Group III nitride materials. Due to their chemistry, red LEDs lose a significant portion (e.g., 40-50%) of their efficacy when operating at 85ºC versus operating at a cold condition (i.e., room temperature or less). When red and blue LEDs are affixed to a common submount or in thermal communication with a common heatsink, heat emanating from the blue LEDs will increase the temperature of the red LEDs. To maintain a relatively constant color point utilizing a device including a Group III-nitride-based blue LED (e.g., as part of a BSY emitter) and Group III-phosphide based red LED, current to the Group III-phosphide based red LED emitter must be altered as temperature increases because of the different temperature responses of the blue LED and red LED. Adjustment of supply of current to different emitters responsive to a temperature signal is known as temperature compensation.

[0012] A representative LED lighting system in the art including arrays of red LEDs, an array of green LEDs, an array of blue LEDs, a single photodiode, and a temperature sensor, is disclosed in U.S. Patent No. 6,441,558. The three arrays of LEDs are arranged in a light mixer arranged to receive power from a rectified power supply, with a controller being coupled to the power supply and light mixer. The controller includes optical feedback from a photodiode in combination with a feed-forward temperature compensation arrangement to maintain output at a desired color point and light output level by separately controlling supply of current to the red LED array, the green LED array, and the blue LED array arranged in parallel. Output color may be adjusted with a user input for color preference. U.S. Patent No. 6,441,558 discloses use of a single photodiode for light sensing and a single temperature sensor for temperature sensing for the entire lighting device. In each array, the plurality of LEDs preferably has substantially similar electrical and optical characteristics. Chromaticity coordinates of the LED light sources are estimated based on the sensed temperature in combination with stored lumen output fractions as a function of junction temperature. Output of the light sensor and temperature sensor are used in combination with stored information to control each LED array to provide a desired light intensity and maintain a desired color point.

[0013] The LED lighting system according to U.S. Patent No. 6,441,558 has various limitations that affect its utility. Use of optical feedback increases complexity and expense of the lighting device, and the optical sensor may restrict light output, increase device size, and/or affect aesthetics of the lighting device. Control of each LED array as a group does not accommodate possible variation in output characteristics for different emitters within a single array (as noted previously, output characteristics of LEDs differ due to natural batch-to-batch variations in production). Although variation in output characteristics between different LEDs of the same color to be used in a single lighting device may be reduced by sorting and binning (with selection of emitters have closely matched characteristics), such approach limits utilization of the full distribution of pre-manufactured LED components and therefore increases cost of the resulting lighting device. With each LED array arranged in parallel as disclosed by U.S. Patent No. 6,441,558, at least six contacts (i.e., an anode and cathode for each of three LED color arrays) are required to supply power to the LEDs, thereby complicating wiring and fabrication of a resulting device.

[0014] Although U.S. Patent No. 6,441,558 assumes that multiple LEDs have substantially similar electrical and optical characteristics, actual LEDs as produced by conventional manufacturing methods are subject to variation in such characteristics from batch to batch, thereby affecting their output intensity and output color. When multiple LEDs are distributed over a large area in a single light fixture and subject to control with the same control circuit, color point and/or intensity may vary significantly at different locations along the fixture. Moreover, temperature at various points of a light fixture may differ significantly, especially with respect to fixtures of large sizes (e.g., due to placement of heatsinks, proximity to external cooling or heating sources such as HVAC outlets or windows/doors, natural convection effects, etc.). Such temperature differences at different locations of LEDs within a single light fixture may lead to further variations in color point and/or intensity at different locations along the fixture.

[0015] Lighting devices including temperature protection circuits that terminate operation of emitters of the lighting device upon sensing of an excessive temperature condition are known. Such devices have limited utility, however, since an operator of such a lighting device may mistakenly assume that the device is defective when the device ceases operation upon detection of an excessive temperature condition. It would be beneficial to avoid misperception by lighting device operators of operational status of a lighting device when a lighting device detects an over-temperature condition.

[0016] Elongated lighting devices such as fluorescent tube-based light fixtures are widely employed in commercial and industrial buildings, as well as in some residential environments. Solid state lighting devices are capable of operating at much greater luminous efficiency and greater reliability than fluorescent tubes, but solid state lighting devices generally include small-area emitters that approximate point sources – in contrast to the large emissive area characteristic of fluorescent tubes. It would be desirable to provide solid state lighting devices similar in size and conformation to fluorescent tube-based devices to enable retrofit of solid state light bulbs or solid state light fixtures in the same or a comparable envelope of space.

[0017] It would be desirable to overcome one or more of the foregoing limitations associated with conventional solid state lighting devices.

[0018] This background information is provided to reveal information believed by Applicants to be of possible relevance to the present invention. No admission is necessarily intended, or should be construed, that any of the preceding information constitutes prior art impacting the patentable character of the subject matter claimed herein.

SUMMARY

[0019] The present invention relates in various aspects to lighting devices including multiple solid state emitters having different peak wavelengths, with at least one temperature sensing element and at least one temperature compensation circuit arranged to adjust supply of current to at least one solid state emitter responsive to an output signal of the at least one temperature sensing element. Such elements may be mounted on a single submount and may be utilized to maintain the output emissions at a substantially constant color or color temperature over a range of different temperatures. Multiple separately temperature compensated clusters of solid state emitters may be provided in a single lighting device, such as a light fixture or other lighting apparatus.

[0020] In another aspect, the invention relates to a lighting device comprising a plurality of light emitting diode (LED) chips mounted on a single submount, the plurality of LED chips including at least one first LED chip and at least one second LED chip, wherein spectral output of the at least one first LED chip includes a first peak wavelength, and spectral output of the at least one second LED chip includes a second peak wavelength that is substantially different from the first peak wavelength; at least one temperature sensing element arranged to sense temperature of at least one LED chip of the plurality of LED chips; and at least one temperature compensation circuit element mounted on the single submount, and arranged to adjust supply of current to at least one LED chip of the plurality of LED chips responsive to an output signal of the at least one temperature sensing element; wherein the lighting device is devoid of any light sensing element used to adjust supply of current to the plurality of LED chips during operation of the lighting device

[0021] In a further aspect, the invention relates to a lighting device comprising plurality of LED chips including at least one first LED chip and at least one second

LED chip, wherein spectral output of the at least one first LED chip includes a first peak wavelength, and spectral output of the at least one second LED chip includes a second peak wavelength that is substantially different from the first peak wavelength; at least one temperature sensing element arranged to sense temperature of at least one LED chip of the plurality of LED chips; and at least one temperature compensation circuit element mounted on the single submount, and arranged to adjust supply of current to at least one LED chip of the plurality of LED chips responsive to an output signal of the at least one temperature sensing element; wherein the at least one first LED chip comprises a blue shifted yellow emitter including a principally blue LED chip arranged to stimulate emissions from a yellow phosphor, and the at least one second LED chip comprises a principally red LED chip.

[0022] A further aspect of the invention relates to a lighting device comprising a first cluster of light emitting diode (LED) chips and a second cluster of LED chips, each cluster including at least one first LED chip and at least one second LED chip, wherein spectral output of the at least one first LED chip includes a first peak wavelength, and spectral output of the at least one second LED chip includes a second peak wavelength that is substantially different from the first peak wavelength; at least one first temperature sensing element arranged to sense temperature of at least one LED chip of the first cluster of LED chips; at least one second temperature sensing element arranged to sense temperature of at least one LED chip of the second cluster of LED chips; a first temperature compensation circuit arranged to adjust supply of current to at least one LED chip of the first cluster of LED chips responsive to an output signal of the at least one first temperature sensing element; and a second temperature compensation circuit arranged to adjust supply of current to at least one LED chip of the second cluster of LED chips responsive to an output signal of the at least one second temperature sensing element.

[0023] A still further aspect of the invention relates to a method for fabricating the lighting device described immediately above, the method comprising testing the first cluster of LED chips to determine spectral output as a function of temperature of the at least one LED chip of the first cluster of LED chips; setting at least one parameter of the at least one first temperature compensation circuit responsive to the testing of the first cluster of LED chips; testing the second cluster of LED chips to determine spectral output as a function of temperature of the at least one LED chip of the second cluster of LED chips; and setting at least one parameter of the at least one second temperature compensation circuit responsive to the testing of the second cluster of LED chips.

[0024] Yet another aspect of the invention relates to a lighting device comprising a plurality of light emitting diode (LED) chips; at least one temperature sensing element arranged to sense temperature of at least one LED chip of the plurality of LED chips; and at least one temperature compensation circuit element arranged to adjust supply of current to at least one LED chip of the plurality of LED chips responsive to an output signal of the at least one temperature sensing element during operation of the lighting device, and the at least one temperature compensation circuit element is arranged to initiate an altered operating state of at least one LED chip of the plurality of LED chips responsive to detection by the at least one temperature sensing element of a temperature exceeding a predetermined threshold temperature.

[0025] A still further aspect of the invention relates to a lighting device comprising an elongated body structure having a length and a width, wherein the length is at least about five times the width; and multiple clusters of light emitting diode (LED) chips mounted on or over the body structure, each cluster including at least one first LED chip and at least one second LED chip, wherein spectral output of the at least one first LED chip includes a first peak wavelength, spectral output of the at least one second LED chip includes a second peak wavelength that is substantially different from the first peak wavelength; wherein each individual cluster of the multiple clusters generates combined emissions including spectral output of the at least one first LED chip and spectral output of the at least one second LED chip, and combined emissions generated by each individual cluster are at a color temperature within a range of not more than four MacAdam ellipses on a 1931 CIE diagram of a color temperature of combined emissions generated by each other individual cluster.

[0026] In another aspect, any of the foregoing aspects, and/or various separate aspects and features as described herein, may be combined for additional advantage.

[0027] Other aspects, features and embodiments of the invention will be more fully apparent from the ensuing disclosure and appended claims.

BRIEF DESCRIPTION OF THE DRAWINGS

[0028] FIG. 1 is a 1931 CIE Chromaticity Diagram including representation of the blackbody locus.

[0029] FIG. 2A is an upper perspective view of a multi-emitter solid state lighting package.

[0030] FIG. 2B is a side cross-sectional view of side view of the emitter package of FIG. 2A.

[0031] FIG. 2C is a lower perspective view of the emitter package of FIGS. 2A-2B.

[0032] FIG. 2D is a top plan view of the emitter package of FIGS. 2A-2C.

[0033] FIG. 2E is a top plan view of a submount portion of the emitter package of FIGS. 2A-2D.

[0034] FIG. 3 is a photograph of a solid state emitter device including first and second strings of LEDs, a temperature sensing element, and a temperature compensation circuit.

[0035] FIG. 4 is a simplified top plan schematic view of a solid state emitter package according to one embodiment of the present invention, including multiple solid state emitters, a temperature sensing element, and a temperature compensation circuit arranged on a single submount.

[0036] FIG. 5A is an upper perspective view of a multi-emitter solid state lighting package according to one embodiment of the present invention.

[0037] FIG. 5B is a simplified top plan view of the solid state emitter package of FIG. 5A.

[0038] FIG. 6 is a circuit diagram for a multi-emitter solid state lighting device with two groups of solid state emitters disposed in parallel and at least one temperature compensation circuit element including a current mirror according to one embodiment of the present invention.

[0039] FIG. 7 is a circuit diagram for a multi-emitter solid state lighting device with two groups of solid state emitters disposed in parallel and at least one temperature compensation circuit element including a programmable integrated circuit and a tunable resistor network according to one embodiment of the present invention.

[0040] FIG. 8A is a circuit diagram for a multi-emitter solid state lighting device with two groups of solid state emitters disposed in parallel and at least one temperature compensation circuit element including a programmable integrated circuit with a memory used to store at least one value for adjusting supply of current to at least one group of state emitter according to one embodiment of the present invention.

[0041] FIG. 8B is a circuit diagram for a multi-emitter solid state lighting device with two groups of solid state emitters disposed in parallel and at least one temperature compensation circuit element including an operational amplifier arranged to affect the ratio or distribution of current between the strings of solid state emitters.

[0042] FIG. 9 is a circuit diagram for a multi-emitter solid state lighting device with at least two solid state emitters disposed in parallel and multiple temperature sensing elements and at temperature compensation circuit element according to one embodiment of the present invention.

[0043] FIG. 10 is a circuit diagram for a multi-emitter solid state lighting device with at least two solid state emitters disposed in series, a controllable bypass or shunt, and at least one temperature compensation circuit element according to one embodiment of the present invention.

[0044] FIG. 11 is a circuit diagram for a first controllable bypass circuit useable with lighting devices according to certain embodiments of the present invention.

[0045] FIG. 12 is a circuit diagram for a second controllable bypass circuit useable with lighting devices according to certain embodiments of the present invention.

[0046] FIG. 13 is a circuit diagram for a multi-emitter solid state lighting device with at least one solid state emitter arranged in series with a group of at least two solid state emitters, disposed in series, and at least one temperature compensation circuit element, according to one embodiment of the present invention.

[0047] FIG. 14 is a circuit diagram for a multi-emitter solid state lighting device with at least one solid state emitter arranged in parallel with a group of at least three solid state emitters disposed in series, and at least one temperature compensation circuit element, according to one embodiment of the present invention.

[0048] FIG. 15 is a circuit diagram for a multi-emitter solid state lighting device including a first group of at least two solid state emitters disposed in series and a second group of at least three solid state emitters in series, with the first group and the second group arranged in parallel, and including at least one temperature compensation circuit element, according to one embodiment of the present invention.

[0049] FIG. 16 is a circuit diagram for a multi-emitter solid state lighting device including at least three solid state emitters disposed in series, with at least two solid state emitters arranged in parallel with a controllable bypass or shunt, and at least one temperature compensation circuit element according to one embodiment of the present invention.

[0050] FIG. 17 is a circuit diagram for a multi-emitter solid state lighting device including at least one solid state emitter arranged in series with two groups of solid state emitters (the groups including a first group of at least two solid state emitters in series disposed in parallel with a second group of at least three solid state emitters in series), and at least one temperature compensation circuit element according to one embodiment of the present invention.

[0051] FIG. 18 is a circuit diagram for a multi-emitter solid state lighting device including at least three solid state emitters arranged in parallel and at least one temperature compensation circuit element according to one embodiment of the present invention.

[0052] FIG. 19 is a circuit diagram for a multi-emitter solid state lighting device including at least one solid state emitter arranged in parallel with a group of at least two solid state emitters that are disposed in series, with separate controllable bypass or shunt elements arranged in parallel with each of the at least two solid state emitters that are disposed in series, and at least one temperature compensation circuit element according to one embodiment of the present invention.

[0053] FIG. 20 is a circuit diagram for a multi-emitter solid state lighting device including at least three solid state emitters arranged in series, with separate controllable bypass or shunt elements arranged in parallel with two of the at least three solid state emitters, and at least one temperature compensation circuit element according to one embodiment of the present invention.

[0054] FIG. 21 is a simplified bottom plan view of a lighting device including multiple clusters of solid state emitters, with each cluster being separately temperature compensated.

[0055] FIG. 22 is a flowchart showing various steps of a method for fabricating a lighting device or light fixture including multiple clusters of solid state emitters, with each cluster being separately temperature compensated.

[0056] FIG. 23 is a simplified side elevation view of a lighting device having an elongated body structure and multiple clusters of LED chips mounted on or over the body structure.

[0057] FIG. 24 is a simplified bottom plan view of another lighting device including elongated body structure and multiple clusters of LED chips mounted on or over the body structure.

DETAILED DESCRIPTION

[0058] The present invention relates in various aspects to lighting devices including multiple solid state light emitter (e.g., LED) chips of different peak wavelengths with a temperature compensation circuit arranged to adjust supply of current (e.g., absolute current level, relative current level, current ratio, and/or current pulse width) to at least one LED chip of the plurality of LED chips responsive to an output signal a temperature sensing element. In certain embodiments, the LED chips and temperature compensation circuit may be mounted on a single submount, and the resulting device preferably lacks any light sensing element used to adjust supply of current to the plurality of LED chips during operation of the lighting device.

[0059] A temperature compensation circuit is preferably arranged to maintain the aggregate output emissions of multiple LEDs at a substantially constant color or color temperature over a range of different temperatures sensed by the at least one temperature sensing element. Such range of temperatures preferably spans at least about 10 ºC, more preferably spans at least about 15 ºC, more preferably spans at least about 25 ºC, more preferably spans at least about 35 ºC, more preferably spans at least about 50 ºC, more preferably spans at least about 65 ºC, and still more preferably spans at least about 80 ºC. Substantially constant color or color temperature may refer to a lack of perceptible color or color temperature difference to a typical human observer. “Substantially constant color temperature” in this context may refer to a difference in color temperature of four MacAdam ellipses or less on a 1931 CIE chromaticity diagram.

[0060] A lighting device including multiple LED chips of at least two different peak wavelengths or colors (e.g., as may constitute a multi-color LED cluster), at least one temperature sensing element, and at least one temperature compensation circuit element may be integrated into a solid state light emitter package or other component-level device. Such package or component level device may include a single externally accessible anode contact and a single externally accessible cathode contact, without further anode and cathode contacts. One or more of the resulting multi-LED package(s) or component(s) may be installed and operated in a lighting fixture or lighting apparatus in the same manner as one or more individual LED chips, but without requiring the lighting fixture or lighting apparatus to include additional temperature compensation circuitry.

[0061] In certain embodiments, multiple packages or components each having individually temperature compensated multi-color LED chip clusters may be installed in a single lighting device (e.g., a light fixture or other lighting apparatus).

[0062] Where multiple multi-LED package(s) or component(s) each having an individually temperature compensated cluster of LED chips of multiple colors are used, each multi-color LED cluster is preferably tuned to substantially the same color point (e.g., color temperature). Use of individually temperature compensated components including multi-color LED clusters, with each components tuned to substantially the same color point, simplifies the manufacture of lighting devices including large numbers of LED clusters, since a manufacturer of such a device is relieved of the need to tune color point and perform temperature compensation for the resulting device. This also simplifies wiring of the resulting device.

[0063] As applied to lighting devices of large emitting area, providing individually temperature compensated multi-color LED chip clusters reduces variation in color point at different locations along the device, particularly since a multitude of (comparatively small) LED chips may be spatially segregated along such a lighting device, the individual LED chips may have different optical and/or electrical characteristics (such as may result from normal batch-to-batch production variations), and spatially segregated clusters of LED chips may be subject to different thermal conditions. By providing individually temperature compensated multi-color LED chip clusters that are tuned to substantially the same color point, differing chip-specific optical and/or electrical characteristics due to batch-to-batch variations may be overcome, such that a greater fraction of the full distribution of pre-manufactured LED components may be utilized without requiring matching of LEDs from different bins at the fixture level, thereby reducing cost of the resulting lighting device.

[0064] A method for fabricating a lighting device including multiple individually temperature compensated multi-color LED chip clusters may include testing each cluster of LED chips to determine spectral output as a function of temperature of each cluster, and then setting at least one parameter of (i.e., tuning) a temperature compensation circuit associated with that cluster responsive to such testing. The process of testing and setting a parameter may be repeated thereafter. Such testing and tuning is preferably completed before the multi-chip cluster is mounted in a lighting device (e.g., light fixture or other lighting apparatus). This allows for the identification and repair or removal of faulty LEDs and/or control circuits early in the fabrication process before large numbers of LEDs are integrated into a single component, thereby reducing scrap/repair rate and finished device production costs.

[0065] Unless otherwise defined, terms (including technical and scientific terms) used herein should be construed to have the same meaning as commonly understood by one of ordinary skill in the art to which this invention belongs. It will be further understood that terms used herein should be interpreted as having a meaning that is consistent with their meaning in the context of this specification and the relevant art, and should not be interpreted in an idealized or overly formal sense unless expressly so defined herein.

[0066] Various devices as described herein may embody emitters and/or lumiphors of various colors or wavelength ranges, such as the following:

- Blue (preferably 430 nm to 480 nm; optionally 430-475 nm, 440-475 nm, 450-475 nm, or any suitable sub-range of 430-480 nm);
- Cyan (preferably 481 nm to 499 nm);
- Green (preferably 500 nm to 570 nm, optionally including any suitable sub-range as articulated previously herein);
- Yellow (preferably 571 to 590 nm); and
- Red (preferably 591 to 750 nm, including an optional orange sub-range (preferably 591 to 620 nm), or 621-750 nm, or 621-700 nm, or 600-700 nm, or 610-700 nm, or 610-680 nm, or 620-680 nm, or 620-670 nm, and/or any suitable sub-range as articulated herein).

Other suitable intermediate colors and wavelength ranges or sub-ranges may be used. Since even narrow-band emitters such as LEDs do have a measurable peak width (e.g., as may be quantified by a full-width, half-max (FWHM) value), it is to be recognized that an emitter having a peak wavelength within one of the foregoing color spectral ranges may also generate lesser but still measurable emissions in a different color spectral range. For this reason, various colors as described herein may be optionally described as "principally <color>" (e.g., principally blue, principally red, etc.) to refer to peak emissions within the articulated color spectral range.

[0067] A solid state emitter as disclosed herein can be saturated or non-saturated. The term “saturated” as used herein means having a purity of at least 85%, with the term “purity” having a well-known meaning to those skilled in the art, and procedures for calculating purity being well-known to those skilled in the art.

[0068] Unless the absence of one or more elements is specifically recited, the terms “comprising,” “including,” and “having” as used herein should be interpreted as open-ended terms that do not preclude the presence of one or more elements.

[0069] The terms “electrically activated emitter” and “emitter” as used herein refers to any device capable of producing visible or near visible (e.g., from infrared to ultraviolet) wavelength radiation, including but not limited to, xenon lamps, mercury lamps, sodium lamps, incandescent lamps, and solid state emitters, including diodes (LEDs), organic light emitting diodes (OLEDs), and lasers.

[0070] The terms “solid state light emitter” or “solid state emitter” may include a light emitting diode, laser diode, organic light emitting diode, and/or other semiconductor device which includes one or more semiconductor layers, which may include silicon, silicon carbide, gallium nitride and/or other semiconductor materials, a substrate which may include sapphire, silicon, silicon carbide and/or other microelectronic substrates, and one or more contact layers which may include metal and/or other conductive materials.

[0071] Solid state light emitting devices according to embodiments of the invention may include III-V nitride (e.g., gallium nitride) based LEDs or lasers fabricated on a silicon carbide substrate or a sapphire substrate such as those devices manufactured and sold by Cree, Inc. of Durham, N.C. Such LEDs and/or lasers may be configured to operate such that light emission occurs through the substrate in a so-called “flip chip” orientation. Such LEDs and/or lasers may also be devoid of substrates (e.g., following substrate removal).

[0072] Solid state light emitters may be used individually or in combination with one or more lumiphoric materials (e.g., phosphors, scintillators, lumiphoric inks) and/or optical elements to generate light at a peak wavelength, or of at least one desired perceived color (including combinations of colors that may be perceived as white). Inclusion of lumiphoric (also called ‘luminescent’) materials in lighting devices as described herein may be accomplished by direct coating on solid state light emitter, adding such materials to encapsulants, adding such materials to lenses, by embedding or dispersing such materials within lumiphor support elements, and/or coating such materials on lumiphor support elements. Other materials, such as light scattering elements (e.g., particles) and/or index matching materials, may be associated with a lumiphor, a lumiphor binding medium, or a lumiphor support element that may be spatially segregated from a solid state emitter.

[0073] The expression "correlative color temperature" or "CCT" is used according to its well-known meaning to refer to the temperature of a blackbody that is, in a well-defined sense (i.e., can be readily and precisely determined by those skilled in the art), nearest in color.

[0074] A wide variety of luminescent materials (also known as lumiphors or luminophoric media, e.g., as disclosed in U.S. Pat. No. 6,600,175 and U.S. Patent Application Publication No. 2009/0184616), are well-known and available to persons of skill in the art. Examples of luminescent materials (lumiphors) include phosphors, scintillators, day glow tapes, nanophosphors, quantum dots, and inks that glow in the visible spectrum upon illumination with (e.g., ultraviolet) light. Inclusion of lumiphors in LED devices has been accomplished by providing layers (e.g., coatings) of such materials over solid state emitters and/or by dispersing luminescent materials to a clear encapsulant (e.g., epoxy-based or silicone-based curable resin or other polymeric matrix) arranged to cover one or more solid state light emitters. One or more luminescent materials useable in devices as described herein may be down-converting or up-converting, or can include a combination of both types.

[0075] Various embodiments may include lumiphoric materials and lumiphor support elements that are spatially segregated (i.e., remotely located) from one or more solid state emitters (e.g., such as a yellow lumiphor that is spatially segregated from a blue LED). In certain embodiments, such spatial segregation may involve separation of distances of at least about 1 mm, at least about 2 mm, at least about 5 mm, or at least about 10 mm. In certain embodiments, conductive thermal communication between a spatially segregated lumiphoric material and one or more electrically activated emitters is not substantial. Lumiphoric materials may be supported by or within one or more lumiphor support elements, such as (but not limited to) glass layers or discs, optical elements, or layers of similarly translucent or transparent materials capable of being coated with or embedded with lumiphoric material. In one embodiment, lumiphoric material (e.g., phosphor) is embedded or otherwise dispersed in a body of a lumiphor support element.

[0076] Some embodiments of the present invention may use solid state emitters, emitter packages, fixtures, luminescent materials/elements, power supplies, control elements, and/or methods such as described in U.S. Patent Nos. 7,564,180; 7,456,499; 7,213,940; 7,095,056; 6,958,497; 6,853,010; 6,791,119; 6,600,175, 6,201,262; 6,187,606; 6,120,600; 5,912,477; 5,739,554; 5,631,190; 5,604,135; 5,523,589; 5,416,342; 5,393,993; 5,359,345; 5,338,944; 5,210,051; 5,027,168; 5,027,168; 4,966,862, and/or 4,918,497, and U.S. Patent Application Publication Nos. 2009/0184616; 2009/0080185; 2009/0050908; 2009/0050907; 2008/0308825; 2008/0198112; 2008/0179611, 2008/0173884, 2008/0121921; 2008/0012036; 2007/0253209; 2007/0223219; 2007/0170447; 2007/0158668; 2007/0139923, 2006/0221272, 2011/0068696, and/or 2011/0068702; with the disclosures of each of the foregoing patents and patent application publications being hereby incorporated by reference as if set forth fully herein.

[0077] The expression “lighting device”, as used herein, is not limited, except that it is capable of emitting light. That is, a lighting device can be a device which illuminates an area or volume, e.g., a structure, a swimming pool or spa, a room, a warehouse, an indicator, a road, a parking lot, a vehicle, signage, e.g., road signs, a billboard, a ship, a toy, a mirror, a vessel, an electronic device, a boat, an aircraft, a stadium, a computer, a remote audio device, a remote video device, a cell phone, a tree, a window, an LCD display, a cave, a tunnel, a yard, a lamppost, or a device or array of devices that illuminate an enclosure, or a device that is used for edge- or back-lighting (e.g., backlight poster, signage, LCD displays), bulb replacements (e.g., for replacing AC incandescent lights, low voltage lights, fluorescent lights, etc.), lights used for outdoor lighting, lights used for security lighting, lights used for exterior residential lighting (wall mounts, post/column mounts), ceiling fixtures/wall sconces, under cabinet lighting, lamps (floor and/or table and/or desk), landscape lighting, track lighting, task lighting, specialty lighting, ceiling fan lighting, archival/art display lighting, high vibration/impact lighting—work lights, etc., mirrors/vanity lighting, or any other light emitting device.

[0078] The present inventive subject matter further relates in certain embodiments to an illuminated enclosure (the volume of which can be illuminated uniformly or non-uniformly), comprising an enclosed space and at least one lighting device according to the present inventive subject matter, wherein the lighting device illuminates at least a portion of the enclosure (uniformly or non-uniformly).

[0079] The present inventive subject matter is further directed to an illuminated area, comprising at least one item, e.g., selected from among the group consisting of a structure, a swimming pool or spa, a room, a warehouse, an indicator, a road, a parking lot, a vehicle, signage, e.g., road signs, a billboard, a ship, a toy, a mirror, a vessel, an electronic device, a boat, an aircraft, a stadium, a computer, a remote audio device, a remote video device, a cell phone, a tree, a window, an LCD display, a cave, a tunnel, a yard, a lamppost, etc., having mounted therein or thereon at least one lighting device as described herein.

[0080] In certain embodiments, a temperature compensation circuit may be arranged to purposely shift the output color or color temperature at low current operation, to provide so-called dimming compensation utility. In one embodiment, such dimming compensation utility includes dimming (e.g., to a gold color) to resemble dimmed operation of an incandescent lamp. Such dimming compensation may be triggered based on sensing of a low (but non-zero) current input threshold. In certain embodiments, dimming compensation includes maintenance of substantially the same (e.g., incandescent-like) color or color temperature whenever current input (i.e., to the lighting device or the plurality of LED chips) is below a predetermined non-zero threshold. In other embodiments, dimming compensation is triggered upon sensing of an input current below a predetermined threshold value, but the output color or color temperature may intentionally vary within a shifted (e.g., incandescent-like) regime with respect to variation in input current so long as such input current remains below the predetermined threshold value. Preferably, when input current exceeds a predetermined threshold, the temperature compensation circuit is utilized to maintain a substantially constant output color or output color temperature. Further details regarding dimming compensation are disclosed in U.S. Patent Application No. ____ filed on June 3, 2011 entitled “Systems and Methods for Controlling Solid State Lighting Devices and Lighting Apparatus Incorporating such Systems and/or Methods” (Cree Docket P1342), wherein the disclosure of such application is hereby incorporated by reference for all purposes.

[0081] In certain embodiments, a lighting device includes at least one temperature compensation circuit element arranged to enter an altered operating state (e.g., an alarm state) including at least intermittent operation of at least one

LED chip responsive to detection by at least one temperature sensing element of a temperature exceeding a predetermined threshold temperature. As compared to conventional temperature protection circuits that terminate operation of emitters of a lighting device upon sensing of an excessive temperature condition, providing an altered operating state including at least intermittent operation of at least one LED chip tends to avoids misperception or confusion by a lighting device operator as to the operational state of the lighting device. In one embodiment, a lighting device includes multiple LED chips, at least one temperature sensing element arranged to sense temperature of at least one LED chip of the multiple LED chips, and at least one temperature compensation circuit element arranged to adjust supply of current to at least one LED chip of the plurality of LED chips responsive to an output signal of the at least one temperature sensing element during operation of the lighting device, and the at least one temperature compensation circuit element is arranged to initiate an altered operating state of at least one LED chip of the plurality of LED chips responsive to detection by the at least one temperature sensing element of a temperature exceeding a predetermined threshold temperature. The LED chips may include at least one first LED chip with spectral output including a first peak wavelength and at least one second LED chip including spectral output including a second peak wavelength that is substantially different from the first peak wavelength. The multiple LED chips may be mounted on a single submount. In one embodiment, the altered operating state includes operating at least one LED chip of the plurality of LED chips in a blinking mode. An altered operating state may include a repeating sequence of colored flashes of light. In another embodiment, the altered operating state comprises shifting aggregate output color of the plurality of LED chips to a color differing from at least one output color corresponding to normal operation of the lighting device at a temperature not exceeding the predetermined threshold temperature. An altered operating state may be eliminated automatically after the elapse of a predetermined time period, and/or after an operator reset operation (e.g., deactivating and reactivating the lighting device once or multiple times) has occurred. In certain embodiments, an altered operating state may be changed with respect to the magnitude and/or duration of an over-temperature condition. For example, a repeating sequence of colored flashes of light may be altered with respect to number of flashes, color(s) of flashes, and/or duration of flashes based on magnitude and/or duration of an over-temperature condition, to aid the operator and/or manufacturer in assessing or diagnosing the condition and/or recommending corrective action.

[0082] Certain embodiments of the present invention relate to use of solid state emitter packages. A solid state emitter package typically includes at least one solid state emitter chip that is enclosed with packaging elements to provide environmental and/or mechanical protection, color selection, and light focusing, as well as electrical leads, contacts or traces enabling electrical connection to an external circuit. Encapsulant material, optionally including lumiphoric material, may be disposed over solid state emitters in a solid state emitter package. Multiple solid state emitters may be provided in a single package. A package including multiple solid state emitters may include at least one of the following: a single leadframe arranged to conduct power to the solid state emitters, a single submount to which multiple solid state emitter chips are mounted, a single reflector arranged to reflect at least a portion of light emanating from each solid state emitter, a single submount supporting each solid state emitter, and a single lens arranged to transmit at least a portion of light emanating from each solid state emitter.

[0083] FIGS. 2A through 2E depict a multi-emitter solid state lighting component (namely, a package) 40 including certain features shared with devices according to embodiments of the present invention (to be described in more detail below). The package 40 includes a submount 42 for supporting an array of LED chips 48 (e.g., including multiple distinct groups of LED chips), with the submount 42 having die pads 44 and conductive traces 46 along a top surface thereof. Each LED chip 48 is mounted to a different die pad 44. Various combinations of colored, white, and near-white emitters as disclosed herein may be arranged in the multi-emitter package 40. LED structures, features, and their fabrication and operation are generally known in the art and only briefly discussed herein.

[0084] LED chips 48 can be fabricated using known processes, with a suitable process being fabrication of layers using metal organic chemical vapor deposition (MOCVD). LED chips generally comprise an active layer/region sandwiched between first and second oppositely doped layers, with the various layers being formed in succession on or over a growth substrate. LED chips can be formed groupwise on a wafer and then diced into single chips for mounting in a package. A growth substrate may remain as part of a final singulated LED chip, or the growth substrate can be fully or partially removed.

[0085] It is also understood that additional layers and elements can also be included in the LED chips 48 – including but not limited to buffer, nucleation, contact, and current spreading layers, as well as light extraction layers and elements. An active region may comprise a single quantum well (SQW) structure, a multiple quantum well (MQW) structure, double heterostructure structures, or super lattice structures. The active region and doped layers may be fabricated from various types of material systems, with preferred material systems being Group-III nitride based material systems. Group-III nitrides refer to semiconductor compounds formed of nitrogen and the elements in the Group III of the periodic table, e.g., aluminum, gallium, or indium (forming AlN, GaN, or InN). Group III nitrides also include ternary compounds (e.g., AlInGaN) and quaternary compounds (e.g., aluminum indium gallium nitride (AlInGaN)). In a preferred embodiment, doped layers of a LED chip comprise gallium nitride (GaN), and the active region comprises InGaN. In alternative embodiments, doped layers may comprises AlGaN, aluminum gallium arsenide (AlGaAs), aluminum gallium indium arsenide phosphide (AlGaInAsP) , aluminum indium gallium phosphide (AlInGaP) or zinc oxide (ZnO). A growth substrate of a LED may comprise any suitable (e.g., crystalline) material such as (but not limited to) silicon, glass, sapphire, silicon carbide, aluminum nitride (AlN), or gallium nitride (GaN).

[0086] A LED chip 48 may comprise a conductive current spreading structure and wire bond pads on the top surface, of which both are made of a conductive material (e.g., Au, Cu, Ni, In, Al, Ag, conducting oxides, and transparent conducting oxides) and may be deposited using known methods. A current spreading structure may include conductive portions arranged in a grid or other distributive layer on a LED chip, with the conductive portions spaced to enhance spreading of current from a pad into a LED top surface.

[0087] At least some LED chips 48 may be coated with or otherwise disposed to impinge light onto one or more lumiphors (e.g., phosphors) arranged to absorb at least some of the LED emissions and responsively emit light of a different wavelength of light. LED emissions may be fully absorbed, or only partially absorbed so that emissions from the resulting device include a combination of light from the LED and light from one or more lumiphors. In certain embodiments, at least some of the LED chips can comprise an LED that emits light in the blue wavelength spectrum, with a phosphor absorbing some of the blue light and re-emitting yellow light. The resulting LED and phosphor combination may emit a combination of blue and yellow light appearing white or non-white. In one embodiment, a yellow phosphor comprises commercially available YAG:Ce, although a full range of broad yellow spectral emission is possible using conversion particles made of phosphors based on the $(Gd,Y)_3(Al, Ga)_5O_{12}$:Ce system, such as the $Y_3Al_5O_{12}$:Ce (YAG). Other yellow phosphors that can be used for white emitting LED chips include:

$Tb_{3-x}RE_xO_{12}$:Ce (TAG); Re=Y, Gd, La, Lu; or

$Sr_{2-x-y}Ba_xCa_ySiO_4$:Eu.

[0088] In some embodiments, one or more LED chip may a blue emitting LED arranged to interact with other phosphors that absorb blue light and emit yellow or green light. Examples of yellow and/or green phosphors that may be used for such chips include the following:

$(Sr,Ca,Ba)\ (Al,Ga)_2S_4\text{: }Eu^{2+}$

$Ba_2(Mg,Zn)Si_2O_7\text{: }Eu^{2+}$

$Gd_{0.46}Sr_{0.31}Al_{1.23}O_xF_{1.38}\text{:}Eu^{2+}{}_{0.06}$

$(Ba_{1-x-y}Sr_xCa_y)SiO_4$:Eu

$Ba_xSiO_4\text{:}Eu^{2+}$

[0089] LED chips 48 emitting red light can comprise LED structures and materials that permit emission of red light directly from the active region (e.g., phosphide-based active region). Alternatively, red emitting LED chips 48 can comprise LEDs covered by a phosphor that absorbs the LED light and emits a red light. Examples of red or red/orange phosphors appropriate for these structures may include:

$Lu_2O_3\text{:}Eu^{3+}$

$(Sr_{2-x}La_x)(Ce_{1-x}Eu_x)O_4$

$Sr_2Ce_{1-x}Eu_xO_4$

$Sr_{2-x}Eu_xCeO_4$

$SrTiO_3\text{:}Pr^{3+},Ga^{3+}$

$CaAlSiN_3\text{:}Eu^{2+}$

$Sr_2Si_5N_8\text{:}Eu^{2+}$

[0090] Each of the phosphors described above exhibits excitation in the desired emission spectrum, provides a desirable peak emission, has efficient light conversion, and has acceptable Stokes shift. It is understood, however, that many other phosphors can used in combination with desired solid state emitters (e.g., LEDs) to achieve the desired aggregated spectral output.

[0091] LED chips 48 can be coated with a phosphor using many different methods, with examples of suitable methods being described in U.S. Patent Application Publication Nos. 2008/0173884, 2008/0179611, and 2007/0158668. It is understood that LED packages as described herein can include multiple LEDs of different colors, of which one or more may emit white light or near-white light.

[0092] The submount 42 can be formed of many different materials with a preferred material being electrically insulating, such as a dielectric. The submount 42 can comprise ceramic such as alumina, aluminum nitride, or silicon carbide; or a polymeric material such as polyimide, polyester, etc. A submount may comprise a material having a high thermal conductivity, such as aluminum nitride or silicon carbide. A submount 42 may include or be coated with a high reflective material, such as reflective ceramic or metal (e.g., silver) to enhance light extraction from the package 40. A submount 42 may comprise a printed circuit board (e.g., FR4, metal core PCB, or other type), sapphire, silicon carbide, silicon, copper, aluminum, steel, other metal, metal alloy, or a thermally clad insulated material.

[0093] The die pads 44 and conductive traces 46 can comprise many different materials such as metals (e.g., copper) or other conductive materials, deposited via plating and patterned via photolithographic process. Die pads 44 may also include or be plated with adhesive or bonding materials, or reflective and barrier layers or dielectric layers. LEDs may be mounted to the die pads 44 using conventional methods such as soldering.

[0094] In certain embodiments, wire bonds may pass between conductive traces 46 and LED chips 48 to convey electrical signals. In other embodiments, one or more LED chips 48 may include coplanar electrical contacts on one side of a LED (bottom side) with the majority of the light emitting surface being located on a side of the LED opposing the electrical contacts (upper side). Such flip-chip LEDs may be mounted to the submount 42 using contacts corresponding to one electrode (anode or cathode, respectively) onto the die pad 44, with the other LED electrode (cathode or anode, respectively) mounted to the traces 46.

[0095] An optical element/lens 55 may be provided over the LED chips 48 to provide environmental and mechanical protection. The lens 55 may be arranged be in different locations on the top surface of the submount 42, e.g., centered or off-center, as desirable to provide spacing for adjacent components. In some embodiments the lens 55 can be disposed in direct contact with the LED chips 48 and a top surface of the submount 42. In other embodiments, an intervening material or layer may be provided between the LED chips 48 and a top surface of the submount. A lens 55 may be formed, for example, via molding, and the lens may be shaped into different shapes to affect light output. Various lens shapes suitable for different applications include hemispheric, ellipsoid bullet, flat, hex-shaped, and square. Lens materials may include silicones, plastics, epoxies or glass. Various lens sizes may be used, with typical hemispheric lenses being greater than 5mm in diameter, and in some embodiments greater than ~11 mm in diameter. A preferred LED array size to lens diameter ratio should be less than approximately 0.6, and preferably less than 0. In other embodiments, a lens 55 can have a diameter of at least about the same size as (or larger than) a width of the LED array. For circular LED array the diameter of the lens can be approximately the same as or larger than the diameter of the LED array. The arrangement of the LED package 40 is easily adapted for use with one or more secondary lenses or optics to facilitate beam shaping, as are well known in the art and commercially available.

[0096] A LED package 40 may include an optional protective layer 56 covering the top surface of the submount 42, e.g., in areas not covered by the lens 55. The protective layer 56 provides additional protection to the elements on the top surface to reduce damage and contamination during subsequent processing steps and use. A protective layer 56 may be formed concurrently with the lens 55, and optionally may comprise the same material as the lens 55.

[0097] The lens 55 may also include features or elements arranged to diffuse or scatter light (e.g., a diffuser), including scattering particles or structures. Such particles may including materials such as titanium dioxide, alumina, silicon carbide, gallium nitride, or glass micro spheres, with the particles preferably being dispersed within the lens. Alternatively, or in combination with the scattering particles, air bubbles or an immiscible mixture of polymers having a different index of refraction could be provided within the lens or structured on the lens to promote diffusion of light. Scattering particles or structures may be dispersed homogeneously throughout the lens 55 or may be provided in different concentrations or amounts in different areas in or on a lens. In one embodiment, scattering particles may be provided in layers within the lens, or may be provided in different concentrations in relation to the location of LED chips 48 (e.g., of different colors) within the package 40.

[0098] As shown in FIG. 2E, the emitter package 40 includes three contact pairs 66a-66b, 68a-68b, 70a-70b that provide interfaces up to three controllable circuits 60, 62, and 64 (including traces and bond pads to which solid state emitters may be coupled) formable in or on the package 40. Multiple solid state emitters (e.g., LED chips) may be disposed in series in each separate circuit 60, 62, 64. In one implementation, two circuits permit inclusion of up to ten LEDs each, and the other circuit permits inclusion of up to eight LEDs, for a total of up to twenty-eight LEDs operable in three separate groups. By dividing the LED chips among three circuits 50, 52, 54, the electric current may be separately applied to each circuit 50, 52, 54 and adjusted to tune the combined output of the LED package 40 to more closely approximate target color coordinates of interest. Various control components may be used to effectuate separate control of current to the three circuits 50, 52, 54.

[0099] To promote heat dissipation, the LED package 40 may include a thermally conductive (e.g., metal) layer 92 (e.g., as shown in FIG. 2C) on a bottom surface of the submount 42. The conductive layer 92 may cover different portions of the bottom surface of the submount; in one embodiment as shown, the metal layer 92 cover substantially the entire bottom surface. The conductive layer 92 is preferably in at least partial vertical alignment with the LED chips 48. In one embodiment, the conductive layer is not in electrical communication with elements (e.g., LEDs) disposed on top surface of the submount 42. Heat that may concentrate below individual LED 48 chips will pass into the submount 42 disposed directly below and around each LED 48. The conductive layer 92 can aid heat dissipation by allowing this heat to spread from concentrated areas proximate the LEDs into the larger area of the layer 92 to promote conductive transfer to an external heat sink (not shown) or dissipation. The conductive layer 92 may include holes 94 providing access to the submount 42, to relieve strain between the submount 42 and the metal layer 92 during fabrication and/or during operation. In certain embodiments, thermally conductive vias or plugs 74 may be provided that pass at least partially through the submount 42 and are in thermal contact with the conductive layer 92, to promote passage of heat from the submount 42 to the conductive layer 92.

[00100] The package 40 illustrated in FIGS. 2A-2E has been described to provide context for embodiments of the invention, such as described hereinafter.

[00101] FIG. 3 is a photograph of a prototype solid state emitter device 300 (reproduced next to a metric ruler to show device scale) including a first string of BSY LEDs and a second string of red LEDs arranged in a package 340 including a submount 342, and various temperature compensation circuit elements 330 including N-P-N type bipolar junction transistors 335A, 335B and a temperature sensing element arranged on a patterned substrate 332, with a portion of the substrate 332 underlying and supporting the submount 342. Wirebonds 343 were provided to provide electrical connections between the substrate 342 and the submount 332. The temperature compensation circuit elements 330 were set up as a current mirror utilizing the bipolar junction transistors 335A-335B, whereby input current was divided between the first and second strings of LEDs based a signal obtained from the temperature sensing element, with increasing current supplied to the red LED responsive to an increased temperature sensed by the temperature sensing element. As shown in FIG. 3, the entire prototype solid state emitter device 300 measured approximately 1.3 cm x 2.9 cm, for a total footprint area of under 4.0 cm^2 (i.e., about 3.8 cm^2).

[00102] Although a submount 342 and a separate underlying substrate 332 were used for convenience in fabricating the prototype device 300 (i.e., due to prefabrication of the package 340), various embodiments of the present invention include LED chips, temperature compensation circuit elements, and/or temperature sensing element(s) mounted on a single submount.

[00103] In certain embodiments, multiple LED chips including LED chips of different colors, and at least one temperature compensation circuit element, are mounted on a single submount. At least one temperature sensing element is arranged to sense temperature of at least one LED chip of the multiple chips. Such temperature sensing may be direct (i.e., by direct conductive thermal communication with a LED chip) or indirect (e.g., by sensing temperature of a submount or other component arranged to receive heat from at least one LED chip. The at least one temperature compensation circuit element is arranged to adjust supply of current to at least one LED chip responsive to an output signal of the temperature sensing element. Feedback control or open loop control schemes utilizing an output signal of the temperature sensing element may be used. In certain embodiments, the lighting device is devoid of any light sensing element used to adjust supply of current to the plurality of LED chips during operation of the lighting device. In other embodiments, at least one light sensing element may be employed to provide an optical feedback signal for control of the control of the at least one LED chip, with the at least one light sensing element generating an output signal used to adjust supply of current to at least one LED chip of a plurality of LED chips during operation of the lighting device. The lighting device may preferably include at least one blue solid state emitter arranged to stimulate emissions from a yellow phosphor, and at least one red solid state emitter. The temperature compensation circuit is preferably arranged to maintain the output emissions of the lighting device at a substantially constant color or color temperature over a range of different temperatures. Such temperature compensation circuit is also preferably tuned to a specific color point, such as by trimming (e.g., laser trimming) one or more resistors within a resistor network and/or storing one or more values or instructions in a memory associated with a programmable integrated circuit arranged as part of a temperature compensation circuit.

[00104] Multiple individually temperature compensated clusters of multiple LED chips of different colors (with each cluster having a dedicated temperature sensing element and temperature compensation circuit) may be arranged in a single lighting device. Each cluster is preferably tuned to substantially the same color point, with each temperature compensation circuit being arranged to maintain output emissions of the corresponding cluster of LED chips at substantially the same color temperature. The temperature compensation circuit is preferably arranged to increase current or current pulse width supplied to at least one LED within a multi-LED cluster responsive to an increased temperature sensed by the temperature sensing element associated with that circuit.

[00105] Adjustment of supply of current to at least one LED chip of a temperature compensated multi-color LED cluster may include adjusting absolute current level (e.g., utilizing a current mirror circuit, bipolar junction transistors, variable resistors, and/or programmable integrated circuits) to one or more LED chips, adjusting ratios of currents supplied to different LED chips, and/or adjusting current pulse width (e.g., utilizing a pulse width modulation circuit) supplied to one or more LED chips.

[00106] In certain embodiments, at least one temperature compensation circuit element comprises at least one current bypass element and/or a current shunt element. Current bypass elements and current shunt elements are described, for example, U.S. Patent Application Publication Nos. 2011/0068702, and/or

2011/0068696, which publications are hereby incorporated by reference herein for all purposes.

[00107] Multiple individually temperature compensated clusters of LEDs of different colors may be arranged in a single lighting device, such as by mounting on a common substrate, in conductive thermal communication with a single heatsink, arranged to cause emissions to reflect from a single reflector or lens, and/or arranged to cause emissions to be diffused by a single diffuser.

[00108] FIG. 4 is a simplified top plan schematic view of a solid state emitter package according to one embodiment of the present invention, including multiple solid state emitters (e.g., LED chips) arranged under a lens or other optical element 455, a temperature sensing element 425, and a temperature compensation circuit 430 arranged on a single submount 442. A single anode contact 466A and a single cathode contact 466B are provided on the submount 442, whereby multiple LED chips and at least one temperature compensation circuit element 430 are operatively arranged to receive current applied between the single anode 466A and the single cathode 466B.

[00109] FIGS. 5A-5B illustrate a multi-emitter solid state lighting package 540 according to one embodiment of the present invention. Multiple solid state emitter chips (e.g., LED chips) 548A-548C and at least one temperature compensation circuit element 530 are arranged on a single submount 542. A reflector may be provided on or over at least a portion of the submount 542. A molded body structure 541 is provided to attach to and/or encase at least a portion (e.g., peripheral portion) of the submount 542, with a single anode contact 566A and a single cathode contact 566 (i.e., electrical leads) protruding laterally from the molded body structure 541. Optional serial contacts 570A, 570B may also be externally accessible along an exterior portion of the body structure 541. In one embodiment, the at least one temperature compensation circuit element 530 includes a programmable integrated circuit with an associated memory storing at least one value that may be used to adjust supply of current to at least one chip 548A-548C of the LED chips 548A-548C. The serial contacts 570A, 570B may be used to communicate with the memory, in order to set at least one parameter of the temperature compensation circuit (i.e., to tune the temperature compensation circuit) following testing of the LED chips 548A-548C to determine spectral output of such chips 548A-548C as a function of temperature. After testing and tuning of the temperature compensation circuit is complete, the serial contacts 570A, 570B may optionally be eliminated (e.g., cut), covered, or otherwise rendered inoperative.

[00110] FIG. 6 is a circuit diagram for a multi-emitter solid state lighting device 600 with two groups or strings of solid state emitters (e.g., LEDs) 648A, 648B disposed in parallel and operatively coupled to at least one temperature compensation circuit element 630 including a current mirror (as may be assembled from discrete components including, for example, bipolar junction transistors) and an externally tunable resistor network 627 (as part of a temperature compensation circuit 626). The strings of emitters 648A, 648B and the temperature compensation circuit 626 are arranged between a single anode 601 and a single cathode 602. As illustrated, the first string 648A includes two LEDs 648A1-648A2, and the second string 648B includes three LEDs 648B1-648B3. The temperature compensation circuit 626 includes a temperature sensor (e.g., thermistor) 625 and a trimmable resistor network 627 (including at least one resistor 628 subject to trimming) arranged in parallel with a further resistor 624. After testing of the LEDs 648A1-648A2, 648B1-648B3 to determine spectral output of such LED chips as a function of temperature, the resistor network 627 may be tuned, preferably by trimming (e.g., laser trimming) to tune the temperature compensation circuit 626 for desired response characteristics. Such testing and trimming may be repeated (i.e., the testing may be repeated to verify that the temperature compensation circuit 626 has been tuned properly, and the resistor network 627 may be further trimmed) as necessary to achieve the desired response. In one embodiment, the first string 648A includes BSY LEDs 648A1-648A2, and the second string 648B includes red LEDs 648B1-648B3, and a greater fraction of current may be supplied to the red LEDs as temperature rises to compensate for the loss in efficacy of phosphide-based LEDs at elevated temperatures.

[00111] FIG. 7 is a circuit diagram for a multi-emitter solid state lighting device 700 with two groups or strings of solid state emitters 748A, 748B disposed in parallel and at least one temperature compensation circuit element 730 including a programmable specific integrated circuit (e.g., a microcontroller or application specific integrated circuit (ASIC)) for controlling current ratios, an externally tunable resistor network 727, and a temperature sensing element 725 (as part of a temperature compensation circuit 726. The strings of emitters 748A, 748B and the temperature compensation circuit 726 are arranged between a single anode 701 and a single cathode 702. As illustrated, the first string 748A includes two LEDs

748A1-748A2, and the second string 748B includes two LEDs 748B1-748B2. After testing of the LEDs 748A1-748A2, 748B1-748B2 to determine spectral output of such LED chips as a function of temperature, the resistor network 727 may be tuned, preferably by trimming (e.g., laser trimming) to tune the temperature compensation circuit 726 for desired response characteristics. Such testing and trimming may be repeated as necessary to achieve the desired response. In one embodiment, the first string 748A includes BSY LEDs 748A1-748A2, and the second string 748B includes red LEDs 748B1-748B2. One or more red LEDs may be supplemented by or substituted with at least one cyan LED in certain embodiments. One or more red LEDs may be supplemented by or substitute with at least one green LED in further embodiments.

[00112] FIG. 8A is a circuit diagram for a multi-emitter solid state lighting device 800 with two groups of solid state emitters 848A, 848B disposed in parallel and at least one temperature compensation circuit element 830 including a programmable integrated circuit such as a microcontroller or ASIC for controlling current ratios and a temperature sensing element 825 as part of a temperature compensation circuit 826. The programmable integrated circuit preferably has an associated (optionally integrated) memory that may be used to store at least one value used for adjusting supply of current to at least one LED of the strings 848A, 848B. The strings of emitters 848A, 848B and the temperature compensation circuit 826 are arranged between a single anode 801 and a single cathode 802. As illustrated, each string 848A, 848B includes two LEDs 848A1-848A2, 848B1-848B2. After testing of the LEDs 848A1-848A2, 848B1-848B2 to determine spectral output of such LED chips as a function of temperature, the temperature compensation circuit 826 may be tuned by setting at least one parameter of the temperature compensation circuit 826 to provide desired response characteristics, preferably by communicating at least one value to the memory associated with the programmable integrated circuit via a serial communication link 870. Such testing and setting of at least one parameter of the temperature compensation circuit 826 may be repeated as necessary to achieve the desired response of the device 800. In one embodiment, the first string 848A includes BSY LEDs 848A1-848A2, and the second string 848B includes red LEDs 848B1-848B2.

[00113] FIG. 8B is a circuit diagram for a multi-emitter solid state lighting device 850 with two groups of solid state emitters 898A, 898B disposed in parallel and a temperature compensation circuit 880 including an operational amplifier (op-amp)

881, a transistor (e.g., MOSFET or bipolar junction (NPN) transistor) 882, at least one temperature sensing element 876 (e.g., a thermistor, optionally accompanied by one or more resistors and/or capacitors), and current ratio setting resistors 874, 878. The strings of emitters 898A, 898B and the temperature compensation circuit 880 are arranged between a single anode 851 and a single cathode 852. As illustrated, each string 898A, 898B includes two LEDs 898A1-898A2, 898B1-898B2. The op-amp 881 may be powered by a tap in one LED string 898A, but consumes negligible power and does not significantly affect operation of the LEDs 898A1, 898A2 therein. Since an inherent property of an ideal op-amp is to provide the same voltage at its input terminals with negative feedback, the op-amp 881 sets the current ratio (or distribution) between the LED strings 898A, 898B. An output from the op-amp 881 serves as an input for the transistor 882, which outputs current as needed to supply voltage to the second resistor 878. One or both of current ratio setting resistors may optionally include a trimmable resistor network and/or a variable resistance element to facilitate tuning of the temperature compensation circuit 880. After testing of the LEDs 898A1-898A2, 898B1-898B2 to determine spectral output of such LED chips as a function of temperature, the temperature compensation circuit 880 may be tuned (e.g., by adjusting resistance values of the resistors 874, 878) to provide desired response characteristics. Such testing and setting of at least one parameter of the temperature compensation circuit 880 may be repeated as necessary to achieve the desired response of the device 850. In one embodiment, the first string 898A includes BSY LEDs 898A1-898A2, and the second string 898B includes red LEDs 898B1-898B2. One advantage of utilizing the op-amp 881 for setting the ratio or distribution of current between the LED strings 898A, 898B is that very high efficiency is obtained – even greater than achievable utilizing a current mirror approach – because the power loss in the resistors 874, 878 is very small.

[00114] Although FIGS. 6, 7, 8A, and 8B each illustrate two strings of solid state emitters arranged in parallel, it is to be recognized that the number of strings is not limited to two, that any suitable number of one or more emitters may be arranged in each string, and that emitters may be arranged in series, in parallel, or in any desirable combinations of serial and parallel arrangements including hierarchical serial and/or parallel arrangements. Any suitable combinations of colors of LEDs may be used in various embodiments unless specifically stated to the contrary. Moreover, multiple colors of LEDs may be arranged in any one or more strings.

[00115] In certain embodiments, voltages of strings of solid state emitters arranged in the same package and/or lighting device are similar or substantially the same in order to promote high efficiency. In various embodiments, voltage differences between strings may be less than one or more of the following thresholds: 25%, 20%, 15%, 10%, 8%, 5%, 3%, 2%, or 1%.

[00116] In certain embodiments, voltage drops of LED (or strings of LEDs) arranged in parallel are substantially equal, in order to promote efficient operation of an individually temperature compensated multi-color LED cluster.

[00117] In certain embodiments, an individually temperature compensated multi-color LED cluster as described herein may include combinations identified in the following non-exhaustive list: (a) a first LED of a first peak wavelength (i.e., first color) and a second LED of a second peak wavelength (i.e., second color) that are arranged in parallel; (b) a first string of two LEDs of a first color and a LED of a second color arranged in series, in series with the combination of a LED of first color in parallel with another LED of the second color; (c) a first string of two LEDs of a first color arranged in parallel with a second string of three LEDs of a second color; (d) two LED of a first color arranged in series with another LED of a second color; (e) one LED of a first color arranged in series with the combination of a second LED of the first color and another LED of a second color arranged in parallel; and (f) one LED of a first color arranged in series with a combination of first and second strings disposed in parallel, with the first string including two more LEDs of the first color and the second string including three LEDs of a second color. Additional LEDs and/or strings of LEDs may be provided. Combination (a) exhibits a low forward voltage (e.g., ~3.2V) but efficacy that is reduced (e.g., ~15-20%) relative to an efficacy-optimized combination. Combination (b) exhibits a high forward voltage (e.g., ~8.5V) with less of an efficacy penalty (e.g., ~6% efficacy reduction at 85 ºC relative to an efficacy optimized combination). Combination (c) exhibits a moderate forward voltage (e.g., ~6.4V) with a very low efficacy penalty (.e.g., ~2% efficacy reduction), Combination (d) exhibits a higher forward voltage (e.g., ~8.5V) with an efficacy penalty that is low at high temperatures (e.g., 85 ºC). Although any desirable colors of LEDs may be used in the foregoing embodiments, in certain embodiments each first LED includes a BSY LED (wherein the output color is white or blue-shifted yellow) and each second LED includes a red LED. Moreover, in certain embodiments, lighting devices are devoid of principally green LEDs.

[00118] FIG. 9 is a circuit diagram for a multi-emitter solid state lighting device 900 including at least two LED chips 948A, 948B (with each chip 948A, 948B optionally representing a LED string) of different colors disposed in parallel, multiple temperature sensing elements 925A, 925B (optionally each arranged to sense one different LED chip or cluster, or alternatively arranged as redundant sensors), and at least one temperature compensation circuit element 930 according to certain embodiments. The LED chips 948A, 948B (which may be considered a multi-LED cluster) and the temperature compensation circuit element(s) 930 (preferably also the temperature sensing elements 925A, 925B) are mounted on a single submount 942 and are operatively arranged to receive current applied between a single anode 901 and a single cathode 902 (preferably externally accessible anode and cathode contacts) of the lighting device 900. The at least one temperature compensation circuit element 930 receives output signals from one or more of the temperature sensing elements 925A, 925B, and responsively controls supply of current to the LED chips 948A, 948B (e.g., by dividing an input current I into fractions I_A and I_B supplied to the first and second LED chips 948A, 948B, respectively, or alternatively by altering pulse width supplied to the LED chips 948A, 948B) to maintain a substantially constant color point over a desirable range of operating temperatures sensed by the temperature sensing element(s) 925A, 925B.

[00119] FIG. 10 is a circuit diagram for a multi-emitter solid state lighting device 1000 including at least two LED chips 1048A, 1048B (with each chip 1048A, 1048B optionally representing a LED string) of different colors disposed in series, a temperature sensing element 1025, and at least one temperature compensation circuit element 1030 according to certain embodiments. A controllable bypass or (configurable) shunt 1031A (as part of a temperature compensation circuit) is arranged in parallel with the first LED chip 1048A, and (with respect to all controllable bypasses and at least certain shunt configurations) may be controlled responsive to an output signal of the temperature sensing element 1025 to variably adjust the supply of current (e.g., absolute current or current pulse width) to the first LED chip 1048A in order to maintain a substantially constant color point over a desirable range of operating temperatures sensed by the temperature sensing element 1025A. The LED chips 1048A, 1048B and the temperature compensation circuit element(s) 1030 (preferably also the temperature sensing element 1025) are mounted on a single submount 1042 and are operatively arranged to receive current applied between a single anode 1001 and a single cathode 1002 (preferably externally accessible anode and cathode contacts) of the lighting device 1000. Based on the supply of current I to the anode 1001, a split portion I_S of current may travel through the controllable bypass or shunt 1031A. The split portion I_S is added to the fraction of the input current that traveled through the first LED and is supplied (as current I) to the second LED chip 1048B.

[00120] A configurable shunt may include, for example, a tunable resistor, a fuse, a switch, a thermistor, and/or a variable resistor, that serves to bypass at least some current around at least one light emitting device (e.g., LED chip). Examples of and further details regarding configurable shunts are disclosed in U.S. Patent Application Publication No. 2011/0068696.

[00121] Certain examples of controllable bypass elements are illustrated in FIG. 11-12. Additional examples of and further details regarding controllable bypass elements are disclosed in U.S. Patent Application Publication No. 2011/0068702.

[00122] FIG. 11 is a circuit diagram for a first controllable bypass circuit 1131 (connected in parallel with a solid state emitter 1148) useable with lighting devices according to certain embodiments of the present invention. The bypass circuit 1131 embodies a variable resistance circuit including a transistor 1135 and multiple resistors 1136-1138. One resistor 1137 may embody a thermistor that provides a control input for the circuit 1131, causing a greater fraction of current to bypass the solid state emitter 1148 as temperature sensed by the thermistor 1137 increases. The bias current I_{bias} is approximately equal to $V_B/(R_1+R_2)$. The bypass current I_B may be given by:

$$I_B = I_C + I_{bias} = (V_B/(1+R_1/R_2)-V_{be})/R_3 + V_B/(R_1+R_2).$$

[00123] FIG. 12 is a circuit diagram for a second controllable bypass circuit useable with lighting devices according to certain embodiments of the present invention. A switch 1235 is configured to couple and decouple circuit nodes connected to a pulse width modulation (PWM) controller circuit 1232 configured to operate the switch 1235 responsive to an output signal of a temperature sensing element. Such a bypass circuit may be placed at various locations within a string of LEDs without requiring a connection to circuit ground. In some embodiments, several such bypass circuits may be connected to a string of LEDs, such as by connecting such circuits in a series and/or hierarchical structure. Such circuits may be arranged in discrete components or in a separate integrated circuit. In some embodiments, the PWM controller circuit 1232 has power input terminals connected across a LED string anode and cathode, such that the PWM controller circuit 1232 is controlled by the same power source that powers the LED string.

[00124] FIG. 13 is a circuit diagram for a multi-emitter solid state lighting device 1300 including at least one LED chip 1348A1 of a first color arranged in series with a group of at least two LED chips arranged in parallel, the at least two LED chips including at least one LED chip 1348A2 of the first color and at least one LED chip 1348B1 of a second color, with a temperature sensing element 1325 and at least one temperature compensation circuit element 1330 according to certain embodiments. The LED chips 1348A1, 1348A2, 1348B1 (which may be considered a multi-LED cluster) and the temperature compensation circuit element(s) 1330 (preferably also the temperature sensing element 1325) are mounted on a single submount 1342 and are operatively arranged to receive current applied between a single anode 1301 and a single cathode 1302 (preferably externally accessible anode and cathode contacts) of the lighting device 1300. The at least one temperature compensation circuit element 1330 receives output signals from the temperature sensing element 1325 and responsively controls supply of current to the two LED chips 1348A2, 1348B1 arranged in parallel to maintain a substantially constant color point over a desirable range of operating temperatures sensed by the temperature sensing element 1325.

[00125] FIG. 14 is a circuit diagram for a multi-emitter solid state lighting device 1400 with at least one LED chip 1448B2 of a second color arranged in parallel with a group of at least three LED chips 1448A1, 1448A2, 1448B2 disposed in series (including two LED chips 1448A1, 1448A2 of a first color and another LED chip 1448B2 of the second color), with a temperature sensing element 1425 and at least one temperature compensation circuit element 1430 according to certain embodiments. The LED chips 1448A1, 1448A2, 1448B1 (which may be considered a multi-LED cluster) and the temperature compensation circuit element(s) 1430 (preferably also the temperature sensing element 1425) are mounted on a single submount 1442 and are operatively arranged to receive current applied between a single anode 1401 and a single cathode 1402 (preferably externally accessible anode and cathode contacts) of the lighting device 1400. The at least one temperature compensation circuit element 1430 receives output signals from the temperature sensing element 1425 and responsively controls supply of current to the at least one LED chip 1448B2 and the group of other LED ships 1448A1, 1448A2, 1448B1 to maintain a substantially constant color point over a desirable range of operating temperatures sensed by the temperature sensing element 1425.

[00126] FIG. 15 is a circuit diagram for a multi-emitter solid state lighting device 1500 including a first group of at least two solid state emitters 1548A1, 1548A2 of a first color disposed in series and a second group of at least three solid state emitters 1548B1, 1548B2, 1548B3 of a second color in series, with the first group and the second group arranged in parallel, the device 1500 including a temperature sensing element 1525 and at least one temperature compensation circuit element 1530 according to certain embodiments. The LED chips 1548A1-1548A2, 1548B1-1548B3 (which may be considered a multi-LED cluster) and the temperature compensation circuit element(s) 1530 (preferably also the temperature sensing element 1525) are mounted on a single substrate 1542 and are operatively arranged to receive current applied between a single anode 1501 and a single cathode 1502 (preferably externally accessible anode and cathode contacts) of the lighting device 1500. The at least one temperature compensation circuit element 1530 receives output signals from the temperature sensing element 1525 and responsively controls supply of current to the at least one LED chip 1548A1-1548A2, 1548B1-1548B3 to maintain a substantially constant color point over a desirable range of operating temperatures sensed by the temperature sensing element 1525.

[00127] FIG. 16 is a circuit diagram for a multi-emitter solid state lighting device 1600 including at least two LED chips 1648A1, 1648A2 of a first color and at least one LED chip 1648B of another color arranged in series, with the two LED chips of the first color being arranged in parallel with a controllable bypass or shunt 1631, the device 1600 including a temperature sensing element 1625 and at least one temperature compensation circuit element 1630 according to certain embodiments. The LED chips 1648A1-1648A2, 1648B1-1648B3 (which may be considered a multi-LED cluster) and the temperature compensation circuit element(s) 1630 (preferably also the temperature sensing element 1625) are mounted on a single submount 1642 and are operatively arranged to receive current applied between a single anode 1601 and a single cathode 1602 (preferably externally accessible anode and cathode contacts) of the lighting device 1600. The at least one temperature compensation circuit element 1630 receives output signals from the temperature sensing element 1625 and responsively controls supply of current to the LED chips 1648A1-1648A2 of the first color by controlling the bypass or shunt

1631 to maintain a substantially constant color point over a desirable range of operating temperatures sensed by the temperature sensing element 1625.

[00128] FIG. 17 is a circuit diagram for a multi-emitter solid state lighting device 1700 including at least one solid state emitter 1748A1 of a first color arranged in series with two groups of solid state emitters (the groups including a first group of at least two solid state emitters 1748A2, 1748A3 of the first color in series, with the first group disposed in parallel with a second group of at least three solid state emitters 1748B1-1748B3 of a second color arranged in series), the device 1700 including a temperature sensing element 1725 and at least one temperature compensation circuit element 1730 according to certain embodiments. The LED chips 1748A1-1748A3, 1748B1-1748B3 (which may be considered a multi-LED cluster) and the temperature compensation circuit element(s) 1730 (preferably also the temperature sensing element 1725) are mounted on a single substrate 1742 and are operatively arranged to receive current applied between a single anode 1701 and a single cathode 1702 (preferably externally accessible anode and cathode contacts) of the lighting device 1700. The temperature compensation circuit element(s) 1730 receives output signals from the temperature sensing element 1725 and responsively controls supply of current to the parallel first group of LED chips 1748A2-1748A3 and second group of LED chips 1748B1-1748B3 by controlling split of current (or current pulse width) supplied to the groups, in order to maintain a substantially constant color point over a desirable range of operating temperatures sensed by the temperature sensing element 1725.

[00129] Although the preceding devices included LED chips of first and second colors, it is to be appreciated that devices according to embodiments of the present invention may include more than two colors of LED chips and/or lumiphoric materials. In certain embodiments, red, green, and blue LEDs may be combined in an independently temperature compensated cluster of multi-color LED chips. In certain embodiments, at least one BSY emitter may be combined with principally red and cyan emitters (e.g., LEDs and/or phosphors of red and/or cyan). Cyan emitters (e.g., 487 nm peak wavelength) are particularly desirable for tuning color temperature in a warm white color temperature range of from about 3000K to about 4000K because the tie line for a 487 nm peak wavelength emitter is substantially parallel to the blackbody locus over this color temperature range. As a result, operation of a cyan emitter enables color temperature to be adjusted between 3000-4000K without departing from the blackbody locus. In certain embodiments, at least one BSY emitter may be combined with principally red, green, and blue emitters or principally red, green, and cyan emitters.

[00130] FIGS. 18-20 embody circuit diagrams for solid state lighting devices including emitter chips (e.g., LED chips) of at least three different colors, in different configurations.

[00131] FIG. 18 is a circuit diagram for a multi-emitter solid state lighting device 1800 including at least three LED chips 1848A-1848C of different colors arranged in parallel, a temperature sensing element 1825, and at least one temperature compensation circuit element 1830 according to certain embodiments. The LED chips 1848A-1848C (which may be considered a multi-LED cluster) and the temperature compensation circuit element(s) 1830 (preferably also the temperature sensing element 1825) are mounted on a single submount 1842 and are operatively arranged to receive current applied between a single anode 1801 and a single cathode 1802 (preferably externally accessible anode and cathode contacts) of the lighting device 1800. The temperature compensation circuit element(s) 1830 receives output signals from the temperature sensing element 1825 and responsively controls supply of current to the LED chips 1848A-1848C to maintain a substantially constant color point over a desirable range of operating temperatures sensed by the temperature sensing element 1825.

[00132] FIG. 19 is a circuit diagram for a multi-emitter solid state lighting device 1900 including at least one LED chip 1948C arranged in parallel with a group of at least two LED chips 1948A, 1948B that are disposed in series, with separate controllable bypass or shunt elements 1931A, 1931B arranged in parallel with the respective at least two LED chips 1948A, 1948B that are disposed in series, the device 1900 further including a temperature sensing element 1925, and at least one temperature compensation circuit element 1930 according to certain embodiments. The LED chips 1948A-1948C (which may be considered a multi-LED cluster) preferably comprise different colors. The LED chips 1948A-1948C and the temperature compensation circuit element(s) 1930 (preferably also the temperature sensing element 1925) are mounted on a single submount 1942 and are operatively arranged to receive current applied between a single anode 1901 and a single cathode 1902 (preferably externally accessible anode and cathode contacts) of the lighting device 1900. The temperature compensation circuit element(s) 1930 receives output signals from the temperature sensing element 1925 and separately controls supply of current to the series-connected LED chips 1948A-1948B by controlling the first bypass or shunt 1931A and the second bypass or shunt 1931B, and further controls relative supply of current (e.g., current ratio) between the LED chip 1948C and the series-connected LED chips 1948A-1948B using the temperature compensation element(s) 1930 (e.g., as may embody a current mirror circuit) to maintain a substantially constant color point over a desirable range of operating temperatures sensed by the temperature sensing element 1925.

[00133] FIG. 20 is a circuit diagram for a multi-emitter solid state lighting device 2000 including at least three LED chips comprising different colors and arranged in series, with separate controllable bypass or shunt elements arranged in parallel with at least two of the LED chips 2048A, 2048B, the device 2000 further including a temperature sensing element 2025, and at least one temperature compensation circuit element 2030 according to certain embodiments. The LED chips 2048A-2048C (which may be considered a multi-LED cluster) and the temperature compensation circuit element(s) 2030 (preferably also the temperature sensing element 2025) are mounted on a single submount 2042 and are operatively arranged to receive current applied between a single anode 2001 and a single cathode 2002 (preferably externally accessible anode and cathode contacts) of the lighting device 2000. The temperature compensation circuit element(s) 2030 receives output signals from the temperature sensing element 2025 and separately controls supply of current to the first and second LED chips 2048A-2048B by controlling the first bypass or shunt 2031A and the second bypass or shunt 2031B to maintain a substantially constant color point over a desirable range of operating temperatures sensed by the temperature sensing element 2025.

[00134] FIG. 21 illustrates a simplified bottom plan view of a lighting device 2110 including multiple individually temperature clusters 2100A-2100X each including multiple solid state light emitting chips (e.g., LEDs) 2148A-2148X of different colors. (Although six clusters 2100A-2100X are shown, it is to be appreciated that any desirable number of clusters may be provided, as represented by the variable “X”). Each cluster 2100A-2100X may embody an individually temperature compensated lighting device as disclosed previously herein. Each cluster 2100A-2100X may preferably (but not necessarily) include a single submount 2142A-2142X to which the respective LEDs 2148A-2148X are mounted. Each cluster 2100A-2100X includes a temperature sensing element and at least one temperature compensation circuit element (not shown, but as described previously herein). The lighting device 2110 includes a body structure or substrate 2111 to which each cluster 2100A-2100X may be mounted, with each cluster 2100A-2100X optionally being arranged in conductive thermal communication with a single heatsink 2118 and further arranged to emit light to be diffused by a single diffuser or other optical element 2117. The lighting device 2110 is preferably self-ballasted. Power may be supplied to the lighting device via contacts 2116 (e.g., a single anode and single cathode). A power conditioning circuit 2112 may provide AC/DC conversion utility, voltage conversion, and/or filtering utility. A dimmer circuit 2114 may be provided to multiple (e.g., some or all) clusters 2100A-2100X on a groupwise basis. Preferably, each cluster 2100A-2100X is tuned to substantially the same color point (e.g., color temperature). In one embodiment, the lighting device 2110 is devoid of any light sensing element used to adjust supply of current to the clusters 2100A-2100X during operation of the lighting device 2110. In another embodiment, one or more light sensing elements (not shown) may be arranged to receive emissions from one or more clusters 2100A-2100X, with an output signal of the one or more light sensing elements being used to control or adjust operation of the clusters 2100A-2100X, such as to ensure attainment of a desired output color or output color temperature by the clusters 2100A-2100X.

[00135] FIG. 22 is a flowchart showing various steps of a method for fabricating a lighting device including multiple clusters of solid state emitters (e.g., LEDs) including different colors, with each cluster being separately temperature compensated with a dedicated temperature sensing element and at least one temperature compensating circuit element. Steps of testing and adjusting color for first and second clusters may proceed in parallel, and after a desired color point is attained for each cluster, such clusters may be mounted to a substrate of a lighting device and operated. A first step 2201A, 2201B that may be performed for each cluster involves passing at least one reference current through the respective multi-chip cluster at at least one reference temperature. A second step 2202A, 2202B that may be performed for each cluster involves measuring color (e.g., using a photometer or other light spectrum analyzer) of light emitted by the respective cluster at at least one reference current and/or temperature level. Responsive to such measurement, a third step 2203A, 2203B that may be performed for each cluster involves setting or adjusting one or more parameters of the temperature compensation circuit for the respective cluster. Such setting or adjusting may include, for example, trimming at least one resistor of a resistor network, storing at least one value or instruction in a memory associated with the temperature compensation circuit, installing or removing a discrete component, or the like. Thereafter, a fourth step 2204A, 2204B that may be performed for each cluster involves measuring color of light emitted by the respective cluster at at least one reference current and/or temperature level. If the desired color point (preferably in combination with a desired temperature response) for each cluster is not attained, then further setting or adjusting of parameters of the temperature compensation circuit and measuring steps may be performed; otherwise, no further setting/adjusting or measuring of the cluster is necessary, as depicted decision blocks 2205A, 2205B. If the desired color point is attained for each cluster, then a further step 2206 may involve mounting of such clusters to a substrate of a lighting device, preferably between a single anode and a single cathode of the lighting device, and/or in thermal communication with a single heatsink associated with the lighting device. Thereafter, current may be supplied to the lighting device to operate the respective first and second clusters of LED chips, whether for pre-validation testing of the lighting device or for post-validation normal operation. Although only first and second clusters were described in connection with this method, it is to be appreciated that desirable lighting devices may include a multiplicity of individually temperature compensated clusters.

[00136] While FIG. 22 is explicitly directed to fabrication of a lighting device including multiple individually temperature compensated multi-chip LED clusters, it is to be appreciated that the first through fifth steps of either side of the diagram (e.g., steps 2201A-2205A) may be applied to fabrication of a lighting device including a plurality of LED chips without necessarily requiring multiple temperature compensated LED clusters. That is, a lighting device including first and second LED chips arranged to output different respective peak wavelengths may be tested to determine spectral output as a function of temperature of the at least one first LED chip and the at least one second LED chip (with such testing involving passing reference currents through the respective LEDs and measuring the obtained color(s) of light), followed by setting or adjusting at least one parameter of at least one temperature compensation circuit element responsive to the testing of the multiple LED chips. Testing may be desirably performed again after the setting or adjusting to verify if the setting or adjusting yielded the desired output color, with optional additional steps of setting/adjustment and testing if necessary. When the desired output color and/or color temperature is obtained, further setting/adjustment and testing are not necessary, and the device may be approved for operation, with such operation including supplying current to operate the multiple LED chips.

[00137] In certain embodiments, multiple clusters of multi-color LED chips are mounted on or over an elongated body structure, with aggregated emissions of the LED chips of each individual cluster having substantially the same color point. Combined emissions generated by each individual cluster are preferably a color temperature within a range of not more than four MacAdam ellipses (more preferably, within a range of not more than three, or not more than two, MacAdam ellipses) on a 1931 CIE diagram of a color temperature of combined emissions generated by each other individual cluster. The elongated body structure preferably has a length of at least about five times (or at least about ten, fifteen, twenty, of thirty times) the width of the body structure. An elongated LED lighting device so formed may constitute a LED light bulb or a LED light fixture serving as a replacement for a tubular fluorescent light bulb or light fixture. An elongated body structure of such a LED lighting device may include a common (single) heatsink, or multiple heatsinks (optionally including heat dissipating fins), in conductive thermal communication with LEDs of the various clusters to dissipate heat generated by the LEDs to an ambient (e.g., air) environment.

[00138] In certain embodiments directed to multiple clusters of multi-color LED chips are mounted on or over an elongated body structure, each cluster may embody a multi-LED package such as described herein, and any suitable number of clusters may be provided, such as one or more of the following numerical thresholds: 2, 3, 5, 10, 20, 50, or 100. Each cluster including at least one first LED chip and at least one second LED chip, with spectral output of the at least one first LED chip including a first peak wavelength, and spectral output of the at least one second LED chip includes a second peak wavelength that is substantially different from the first peak wavelength. For example, a first LED chip may include a principally blue chip arranged to stimulate emissions of a principally yellow phosphor, and a second LED chip may include a principally red LED chip. Other color combinations as disclosed herein may be used. Each cluster may further include third and/or fourth (or additional) LED chips having peak wavelengths differing from the peak wavelengths of at least one first LED and the at least one second LED. Each LED within a multi-LED cluster is preferably sufficiently close to each other LED within the same cluster to facilitate color mixing (optionally enhanced by use of light diffusing and/or light scattering elements) to approximate a substantially uniform point source, and to avoid perception by a human viewer of multiple different colors (e.g., rainbow effects) emitted from that cluster.

[00139] In certain embodiments directed to multiple clusters of multi-color LED chips are mounted on or over an elongated body structure, LED clusters are distributed along the length (and optionally also the width) of the body structure. In certain embodiments, at least two clusters of multiple clusters mounted on or over the body structure are separated by a distance of at least one or more of the following thresholds: 5 cm, 10 cm, 20 cm, 40 cm, 80 cm, 120 cm, 150 cm, 200 cm, and 300 cm. In certain embodiments, each cluster of the multiple clusters mounted on or over the body structure is separated from each other cluster by a distance of at least one or more of the following thresholds: 5 cm, 10 cm, 20 cm, 40 cm, 80 cm, 120 cm, 150 cm, 200 cm, and 300 cm.

[00140] In certain embodiments directed to multiple clusters of multi-color LED chips are mounted on or over an elongated body structure, a resulting device includes at least one temperature compensation circuit arranged to maintain output emissions of each cluster at a substantially constant color or color temperature over a range of different temperatures spanning at least 15 ºC. Optionally, the device may include multiple temperature compensation circuits, with each temperature compensation circuit being associated with a different cluster and arranged to adjust supply of current to one or more LED chips responsive to an output signal of at least one temperature sensing element. In certain embodiments, multiple temperature sensing elements may be provided, wherein each temperature sensing element is arranged to sense temperature of at least one LED chip of a different cluster. In certain embodiments, such a lighting device may be devoid of any light sensing element used to adjust supply of current to LED chips of the multiple clusters. In other embodiments, such a lighting device may include one or more light sensing elements useable to permit adjustment of supply of current to LED chips of the multiple clusters.

[00141] An example of at least a portion of device including multiple clusters of multi-color LED chips mounted on or over an elongated body structure is shown in FIG. 23. The lighting device 2310 includes an elongated body structure 2320 with an emitter support surface 2325 over (or on) which multiple multi-color LED clusters 2300A-2300X are mounted. The clusters 2300A-2300X are spaced apart, preferably according to one or more of the spacing distance thresholds as disclosed herein (e.g., by 5 cm, 10 cm, or more). At least a portion of the body structure 2320 serves as a heatsink, including fins 2360A-2360X, arranged to dissipate heat generated by the LED clusters 2300A-2300X to an ambient (e.g., air) environment. The body structure 2320 has a length (e.g., extending between ends 2321, 2322) at least about five times, more preferably about ten times (or more), greater than a width thereof. Such length and width ratios may be expressed in average length and average width, or in certain embodiments as maximum length and maximum width. Although FIG. 23 shows the device 2310 having eight multi-LED clusters 2300A-2300X and sixteen fins 2360A-2360X, any suitable number of emitters, fins, or other elements may be provided; for this reason, the designation “X” is used to represent the last number in a series, with the understanding that “X” could represent any desirable number. The fins 2360A-2360X may extend along one or multiple surfaces of the elongated body structure 2320, preferably with air gaps between adjacent fins. At least one electrical circuit (e.g., control) element 2350 may optionally be integrated with the lighting device 2310, and end caps 2331, 2332 with associated electrical contacts 2333, 2334, respectively, may be provided at ends 2321, 2322 of the device 2310 for interfacing with a light fixture. The lighting device 2310 is preferably self-ballasted. In one embodiment, the lighting device 2310 may constitute an elongated LED light bulb intended to replace a conventional fluorescent tube-based light bulb.

[00142] Another example of a device including multiple clusters of multi-color LED chips mounted on or over an elongated body structure is shown in FIG. 24. The lighting device 2410 includes an elongated body structure 2420 with at least one emitter support surface 2425 over (or on) which multiple multi-color LED clusters 2400A-2400X are mounted. As illustrated in FIG. 24, the clusters 2400A-2400X are distributed over the length as well as the width of the body structure 2420, with the clusters 2400A-2400X being shown in two staggered rows. Any suitable arrangement or mounting configuration of the clusters 2400A-2400X may be employed. Electrical contacts 2433 (such as may embody a single anode and cathode for supplying power to each cluster 2400A-2400X) are preferably associated with the body structure 2420. As illustrated in FIG. 24, light sensing elements (e.g., photodiodes) 2409A-2409X may be provided to sense light emissions generated by the clusters 2400A-2400X, with output signals of the light sensing elements 2400A-2400X being useable to permit adjustment of supply of current to LED chips within the clusters 2400A-2400X to enable the clusters to attain a desired color point. Each cluster 2400A-2400X (with each cluster optionally including at least one light sensing element 2409A-2409X) may be embodied in a multi-LED package. Each cluster may also include a dedicated temperature sensing element and temperature compensation circuit as disclosed previously herein.

[00143] Embodiments according to the present invention may provide one or more of various beneficial technical effects, including but not limited to the following: reduced variation in color or color temperature of a LED lighting device with respect to variation in operating temperature; reduced variation in color or color temperature among various LED clusters in a multi-cluster lighting device; increased utilization of the full distribution of pre-manufactured LED components with attendant reduction in lighting device fabrication cost; improved efficiency in fabricating and controlling multi-cluster lighting devices by replacing device-level temperature compensation with component-level temperature compensation; enhanced detection of excessive temperature condition of a lighting device without perception that the lighting device is defective; facilitating replacement of elongated fluorescent tube-based lighting devices with higher-efficiency and mercury-free LED-based devices; and providing pleasing character of LED lighting device output at low operating current.

[00144] While the invention has been has been described herein in reference to specific aspects, features and illustrative embodiments of the invention, it will be appreciated that the utility of the invention is not thus limited, but rather extends to and encompasses numerous other variations, modifications and alternative embodiments, as will suggest themselves to those of ordinary skill in the field of the present invention, based on the disclosure herein. Correspondingly, the invention as hereinafter claimed is intended to be broadly construed and interpreted, as including all such variations, modifications and alternative embodiments, within its spirit and scope.

THE CLAIMS

What is claimed is:

1. A lighting device comprising:

a plurality of light emitting diode (LED) chips mounted on a single submount, the plurality of LED chips including at least one first LED chip and at least one second LED chip, wherein spectral output of the at least one first LED chip includes a first peak wavelength, and spectral output of the at least one second LED chip includes a second peak wavelength that is substantially different from the first peak wavelength;

at least one temperature sensing element arranged to sense temperature of at least one LED chip of the plurality of LED chips; and

at least one temperature compensation circuit element mounted on the single submount, and arranged to adjust supply of current to at least one LED chip of the plurality of LED chips responsive to an output signal of the at least one temperature sensing element;

wherein the lighting device is devoid of any light sensing element used to adjust supply of current to the plurality of LED chips during operation of the lighting device.

2. A lighting device according to claim 1, wherein output emissions of the lighting device comprises spectral output of each LED chip of the plurality of LED chips, and the at least one temperature compensation circuit element is arranged to maintain the output emissions at a substantially constant color or color temperature over a range of different temperatures sensed by the at least one temperature sensing element spanning at least 15 ºC.

3. A lighting device according to claim 1, wherein the single submount comprises a printed circuit board.

4. A lighting device according to claim 1, wherein the at least one temperature compensation circuit element is adapted to increase current or current pulse width supplied to the at least one second LED chip, relative to current or current pulse width supplied to the at least one first LED chip, responsive to an increased temperature sensed by the at least one temperature sensing element.

5. A lighting device according to claim 1, wherein the at least one temperature compensation circuit element is adapted to adjust current pulse width to at least one LED chip of the plurality of LED chips.

6. A lighting device according to any one of claims 1 to 5, wherein the at least one temperature compensation circuit element comprises at least one current bypass element or current shunt element.

7. A lighting device according to any one of claims 1 to 5, wherein the at least one temperature compensation circuit element comprises a current mirror.

8. A lighting device according to any one of claims 1 to 5, wherein the at least one temperature compensation circuit element comprises an operational amplifier.

9. A lighting device according to any one of claims 1 to 5, wherein the at least one temperature compensation circuit element comprises a resistor network including at least one trimmed resistor.

10. A lighting device according to any one of claims 1 to 5, wherein the at least one temperature compensation circuit element comprises an integrated circuit with an associated memory storing at least one value used to adjust supply of current to the at least one LED chip of the plurality of LED chips responsive to the output signal of the at least one temperature sensing element.

11. A lighting device according to any one of claims 1 to 5, wherein the at least one temperature compensation circuit element comprises a memory arranged to store at least one value or instruction useable for adjusting supply of current to the at least one LED chip of the plurality of LED chips.

12. A lighting device according to any one of claims 1 to 5, wherein the plurality of LED chips and the at least one temperature compensation circuit element are operatively arranged to receive current applied between a single anode and a single cathode associated with the lighting device.

13. A lighting device according to any one of claims 1 to 5, comprising a body structure attached to or encasing at least a portion of the single submount.

14. A lighting device according to claim 13, comprising at least two externally accessible electrical leads arranged on or extending through the body structure.

15. A lighting device according to claim 13, comprising a single reflector positioned in or on the body structure and arranged to reflect light generated by each LED chip of the plurality of LED chips.

16. A lighting device according to any one of claims 1 to 5, wherein any of the at least one first LED chip and the at least one second LED chip comprises a plurality of LED chips arranged in series.

17. A lighting device according to any one of claims 1 to 5, wherein the at least one first LED chip is arranged in parallel with the at least one second LED chip.

18. A lighting device according to any one of claims 1 to 5, wherein the at least one first LED chip comprises a blue shifted yellow emitter including a principally blue LED chip arranged to stimulate emissions from a principally yellow phosphor, and the at least one second LED chip comprises a principally red LED chip.

19. A lighting device according to any one of claims 1 to 5, comprising at least one principally cyan LED chip.

20. A lighting device according to any one of claims 1 to 5, being devoid of a principally green LED chip.

21. A lighting device according to any one of claims 1 to 5, wherein the at least one temperature compensation circuit element is arranged to cause the plurality of LED chips to output a gold color when input current to the plurality of LED chips is below a predetermined non-zero threshold value.

22. A light fixture or lighting apparatus comprising a plurality of lighting devices according to any one of claims 1 to 5.

23. A light fixture or lighting apparatus according to claim 22, wherein output emissions of each lighting device comprises spectral output of each LED chip of the plurality of LED chips of the respective lighting device, and each lighting device of the plurality of lighting devices is tuned to maintain output emissions at substantially the same color or color temperature.

24. A light fixture or lighting apparatus according to claim 22, comprising a dimmer circuit, wherein each lighting device of the plurality of lighting devices is arranged to receive electric current from the dimmer circuit.

25. A light fixture or lighting apparatus according to claim 22, wherein each lighting device of the plurality of lighting devices is in conductive thermal communication with a single heatsink.

26. A light fixture or lighting apparatus according to claim 22, wherein each lighting device of the plurality of lighting devices is operatively arranged to receive current applied between a single anode and a single cathode associated with the light fixture.

27. A method for fabricating a lighting device according to any one of claims 1 to 5, the method comprising:

testing the plurality of LED chips to determine spectral output as a function of temperature of the at least one first LED chip and the at least one second LED chip; and

setting at least one parameter of the at least one temperature compensation circuit element responsive to the testing of the plurality of LED chips.

28. A method according to claim 27, wherein the setting of the at least one parameter of the at least one temperature compensation circuit element is performed to cause the plurality of LED chips to output a predetermined color or color temperature that is substantially constant over a range of different temperatures sensed by the at least one temperature sensing element spanning at least 15 ºC.

29. A lighting device comprising:

a plurality of light emitting diode (LED) chips mounted on a single submount, the plurality of LED chips including at least one first LED chip and at least one second LED chip, wherein spectral output of the at least one first LED chip includes a first peak wavelength, and spectral output of the at least one second LED chip includes a second peak wavelength that is substantially different from the first peak wavelength;

at least one temperature sensing element arranged to sense temperature of at least one LED chip of the plurality of LED chips; and

at least one temperature compensation circuit element mounted on the single submount, and arranged to adjust supply of current to at least one LED chip of the plurality of LED chips responsive to an output signal of the at least one temperature sensing element;

wherein the at least one first LED chip comprises a blue shifted yellow emitter including a principally blue LED chip arranged to stimulate emissions from a principally yellow phosphor, and the at least one second LED chip comprises a principally red LED chip.

30. A lighting device according to claim 29, wherein output emissions of the lighting device comprises spectral output of each LED chip of the plurality of LED chips, and the at least one temperature compensation circuit element is arranged to maintain the output emissions at a substantially constant color or color temperature over a range of different temperatures sensed by the at least one temperature sensing element spanning at least 15 ºC.

31. A lighting device according to claim 29, wherein the at least one temperature compensation circuit element is adapted to increase current or current pulse width supplied to the at least one second LED chip, relative to current or current pulse width supplied to the at least one first LED chip, responsive to an increased temperature sensed by the at least one temperature sensing element.

32. A lighting device according to any one of claims 29 to 31, wherein the at least one temperature compensation circuit element comprises at least one current bypass element or current shunt element.

33. A lighting device according to any one of claims 29 to 31, wherein the at least one temperature compensation circuit element comprises a current mirror or an operational amplifier.

34. A lighting device according to any one of claims 29 to 31, wherein any of the at least one first LED chip and the at least one second LED chip comprises a plurality of LED chips arranged in series.

35. A lighting device according to any one of claims 29 to 31, wherein the at least one first LED chip is arranged in parallel with the at least one second LED chip.

36. A lighting device according to any one of claims 29 to 31, wherein the lighting device is devoid of any light sensing element used to adjust supply of current to the plurality of LED chips during operation of the lighting device.

37. A lighting device according to any one of claims 29 to 31, further comprising at least one light sensing element arranged to generate at least one output signal used to adjust supply of current to at least one LED chip of the plurality of LED chips during operation of the lighting device.

38. A lighting device according to any one of claims 29 to 31, wherein the at least one temperature compensation circuit element is arranged to cause the plurality of LED chips to output a gold color when input current is below a predetermined non-zero threshold value.

39. A lighting device according to any one of claims 29 to 31, being devoid of a principally green LED chip.

40. A light fixture or lighting apparatus comprising a plurality of lighting devices according to any one of claims 29 to 31.

41. A light fixture or lighting apparatus according to claim 40, wherein output emissions of each lighting device comprises spectral output of each LED chip of the plurality of LED chips of the respective lighting device, and each lighting device of

the plurality of lighting devices is tuned to maintain output emissions at substantially the same color or color temperature.

42. A method for fabricating a lighting device according to any one of claims 29 to 31, the method comprising:

testing the plurality of LED chips to determine spectral output as a function of temperature of the at least one first LED chip and the at least one second LED chip; and

setting at least one parameter of the at least one temperature compensation circuit element responsive to the testing of the plurality of LED chips.

43. A method according to claim 42, wherein the setting of the at least one parameter of the at least one temperature compensation circuit element is performed to cause the plurality of LED chips to output a predetermined color or color temperature that is substantially constant over a range of different temperatures sensed by the at least one temperature sensing element spanning at least 15 ºC.

44. A lighting device comprising:

a first cluster of light emitting diode (LED) chips and a second cluster of LED chips, each cluster including at least one first LED chip and at least one second LED chip, wherein spectral output of the at least one first LED chip includes a first peak wavelength, and spectral output of the at least one second LED chip includes a second peak wavelength that is substantially different from the first peak wavelength;

at least one first temperature sensing element arranged to sense temperature of at least one LED chip of the first cluster of LED chips;

at least one second temperature sensing element arranged to sense temperature of at least one LED chip of the second cluster of LED chips;

a first temperature compensation circuit arranged to adjust supply of current to at least one LED chip of the first cluster of LED chips responsive to an output signal of the at least one first temperature sensing element; and

a second temperature compensation circuit arranged to adjust supply of current to at least one LED chip of the second cluster of LED chips responsive to an output signal of the at least one second temperature sensing element.

45. A lighting device according to claim 44, wherein for each cluster of LED chips, the at least one first LED chip comprises a blue shifted yellow emitter including a principally blue LED chip arranged to stimulate emissions from a yellow phosphor, and the at least one second LED chip comprises a principally red LED chip.

46. A lighting device according to claim 44, wherein the lighting device is devoid of any light sensing element used to adjust supply of current to the first cluster of LED chips or the second cluster of LED chips during operation of the lighting device.

47. A lighting device according to claim 44, further comprising at least one light sensing element arranged to generate at least one output signal used to adjust supply of current to at least one of the first cluster of LED chips and the second cluster of LED chips during operation of the lighting device.

48. A lighting device according to any one of claims 44 to 47, wherein each of the first at least one temperature compensation circuit element and the second at least one temperature compensation circuit element is arranged to maintain output emissions of the corresponding cluster of LED chips at a substantially constant color or color temperature over a range of different temperatures sensed by the at least one temperature sensing element spanning at least 15 ºC.

49. A lighting device according to any one of claims 44 to 47, wherein each of the first at least one temperature compensation circuit element and the second at least one temperature compensation circuit element is arranged to maintain output emissions of the corresponding first and second cluster of LED chips at substantially the same color or color temperature.

50. A lighting device according to any one of claims 44 to 47, wherein each of the first at least one temperature compensation circuit element and the second at least one temperature compensation circuit element is arranged to increase current or current pulse width supplied to the at least one second LED chip of the corresponding first or second cluster of LED chips, relative to current or current pulse width supplied to the at least one first LED chip of the corresponding cluster

of LED chips, responsive to an increased temperature sensed by the corresponding at least one first temperature sensing element or at least one second temperature sensing element.

51. A method for fabricating a lighting device according to any one of claims 44 to 47, the method comprising:

testing the first cluster of LED chips to determine spectral output as a function of temperature of the at least one LED chip of the first cluster of LED chips;

setting at least one parameter of the at least one first temperature compensation circuit responsive to the testing of the first cluster of LED chips;

testing the second cluster of LED chips to determine spectral output as a function of temperature of the at least one LED chip of the second cluster of LED chips; and

setting at least one parameter of the at least one second temperature compensation circuit responsive to the testing of the second cluster of LED chips.

52. A method according to claim 51, wherein (a) the setting of at least one parameter of the at least one first temperature compensation circuit, and (b) the setting of at least one parameter of the at least one first temperature compensation circuit, are performed to cause each of the first cluster of LED chips and the second cluster of LED chips to output substantially the same color or color point.

53. A method according to claim 51, further comprising communicatively coupling each of the first cluster of LED chips and the second cluster of LED chips between a single anode and a single cathode arranged to supply current to the first cluster of LED chips and the second cluster of LED chips.

54. A method according to claim 51, wherein the setting of at least one parameter of the at least one first temperature compensation circuit comprises trimming at least one first resistor associated with the first temperature compensation circuit, and the setting of at least one parameter of the at least one second temperature compensation circuit comprises trimming at least one second resistor associated with the second temperature compensation circuit.

55. A method according to claim 54, wherein said trimming of at least one first resistor and said trimming of at least one second resistor comprises laser trimming.

56. A method according to any one of claims 51 to 55, wherein the at least one first temperature compensation circuit comprises a first programmable integrated circuit, the at least one second temperature compensation circuit comprises a second programmable integrated circuit, the setting of at least one parameter of the at least one first temperature compensation circuit comprises storing at least one value or instruction, and the setting of at least one parameter of the at least one second temperature compensation circuit comprises storing at least one value or instruction.

57. A method according to any one of claims 51 to 55, further comprising mounting the first cluster of LED chips and the second cluster of LED chips in conductive thermal communication with a single heatsink.

58. A method according to any one of claims 51 to 55, further comprising providing at least one of (a) a reflector arranged to reflect emissions from each of the first cluster of LED chips and the second cluster of LED chips, and (b) a diffuser arranged to diffuse emissions from each of the first cluster of LED chips and the second cluster of LED chips.

59. A lighting device comprising:

a plurality of light emitting diode (LED) chips;

at least one temperature sensing element arranged to sense temperature of at least one LED chip of the plurality of LED chips; and

at least one temperature compensation circuit element arranged to adjust supply of current to at least one LED chip of the plurality of LED chips responsive to an output signal of the at least one temperature sensing element during operation of the lighting device, and the at least one temperature compensation circuit element is arranged to initiate an altered operating state of at least one LED chip of the plurality of LED chips responsive to detection by the at least one temperature sensing element of a temperature exceeding a predetermined threshold temperature.

60. A lighting device according to claim 59, wherein the plurality of LED chips is mounted on a single submount.

61. A lighting device according to claim 59, wherein:

the plurality of LED chips includes at least one first LED chip and at least one second LED chip; and

spectral output of the at least one first LED chip includes a first peak wavelength, and spectral output of the at least one second LED chip includes a second peak wavelength that is substantially different from the first peak wavelength.

62. A lighting device according to any one of claims 59 to 61, wherein the altered operating state comprises operating at least one LED chip of the plurality of LED chips in a blinking mode.

63. A lighting device according to any one of claims 59 to 61, wherein the altered operating state comprises shifting aggregate output color of the plurality of LED chips to a color differing from at least one output color corresponding to normal operation of the lighting device at a temperature not exceeding the predetermined threshold temperature.

64. A lighting device comprising:

an elongated body structure having a length and a width, wherein the length is at least about five times the width; and

multiple clusters of light emitting diode (LED) chips mounted on or over the body structure, each cluster including at least one first LED chip and at least one second LED chip, wherein spectral output of the at least one first LED chip includes a first peak wavelength, spectral output of the at least one second LED chip includes a second peak wavelength that is substantially different from the first peak wavelength;

wherein each individual cluster of the multiple clusters generates combined emissions including spectral output of the at least one first LED chip and spectral output of the at least one second LED chip, and combined emissions generated by each individual cluster are at a color temperature within a range of not more than four MacAdam ellipses on a 1931 CIE diagram of a color temperature of combined emissions generated by each other individual cluster.

65. A lighting device according to claim 64, wherein at least two clusters of the multiple clusters are separate by a distance of at least 5 cm.

66. A lighting device according to claim 64, wherein each cluster of the multiple clusters is spatially segregated from each other cluster by a distance of at least 5 cm.

67. A lighting device according to claim 64, comprising at least one temperature compensation circuit arranged to maintain output emissions of each cluster at a substantially constant color or color temperature over a range of different temperatures spanning at least 15 ºC.

68. A lighting device according to claim 64, comprising multiple temperature sensing elements, wherein each temperature sensing element is arranged to sense temperature of at least one LED chip of a different cluster.

69. A lighting device according to claim 64, comprising multiple temperature compensation circuits, wherein each temperature compensation circuit is associated with a different cluster of LED chips and is arranged to adjust supply of current to one or more LED chips responsive to an output signal of at least one temperature sensing element.

70. A lighting device according to any one of claims 64 to 69, wherein for each cluster, the at least one first LED chip comprises a blue shifted yellow emitter including a principally blue LED chip arranged to stimulate emissions from a principally yellow phosphor, and the at least one second LED chip comprises a principally red LED chip.

71. A lighting device according to any one of claims 64 to 69, wherein the lighting device is devoid of any light sensing element used to adjust supply of current to LED chips of the multiple clusters..

72. A lighting device according to any one of claims 64 to 69, comprising at least ten clusters.

73. A lighting device according to any one of claims 64 to 69, wherein the length is at least about ten times the width.

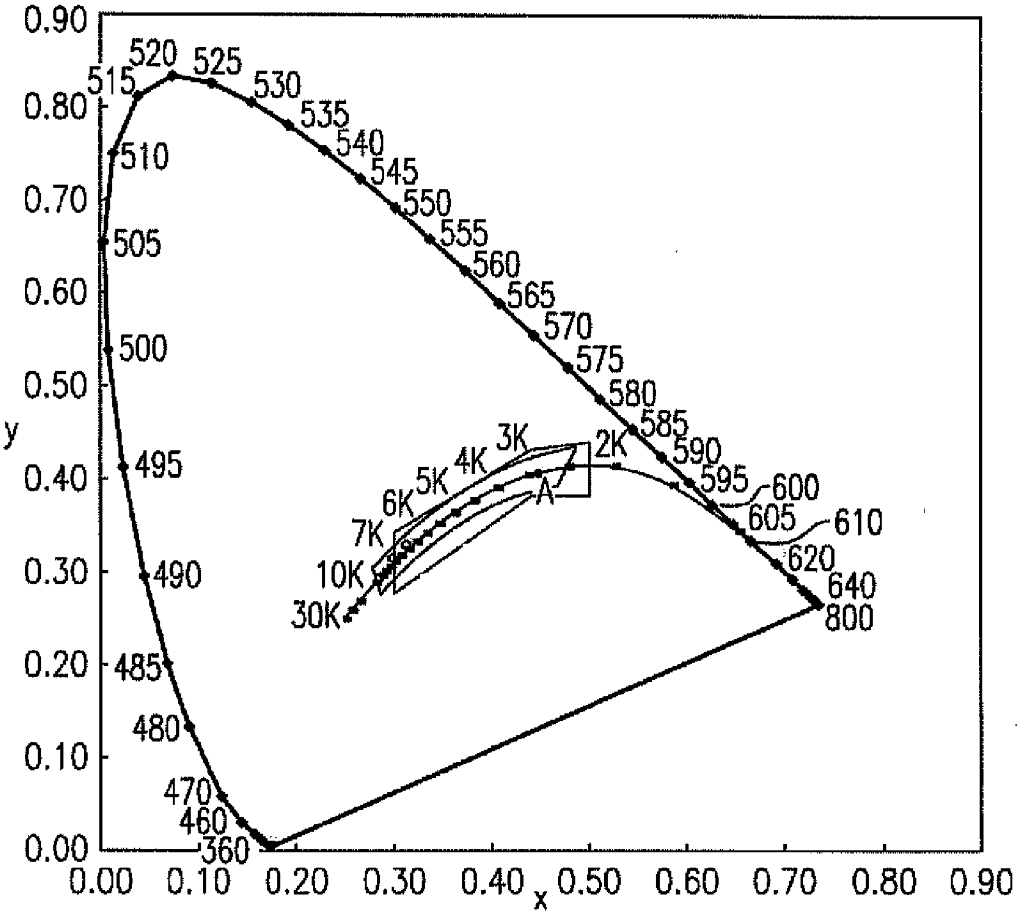
0.90
0.80
0.70
0.60
0.50
0.40
0.30
0.20
0.10
0.00
y
x
0.00 0.10 0.20 0.30 0.40 0.50 0.60 0.70 0.80 0.90
520
525
515
530
535
540
545
550
555
560
565
570
575
580
585
590
595
600
605
610
620
640
800
510
505
500
495
490
485
480
470
460
360
3K
4K
5K
6K
7K
10K
30K
2K
A
Z

FIG._1

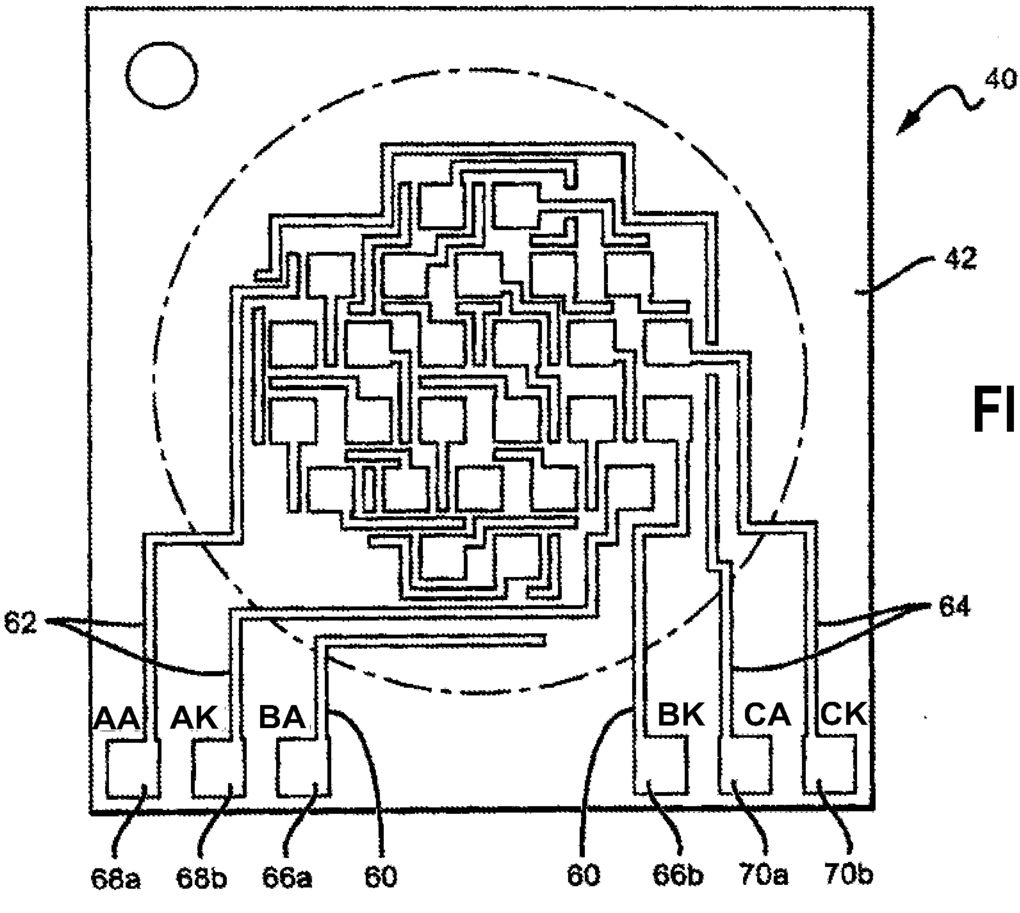
40
42
62
64
AA
AK
BA
BK
CA
CK
68a
68b
66a
60
60
66b
70a
70b

FIG._2E

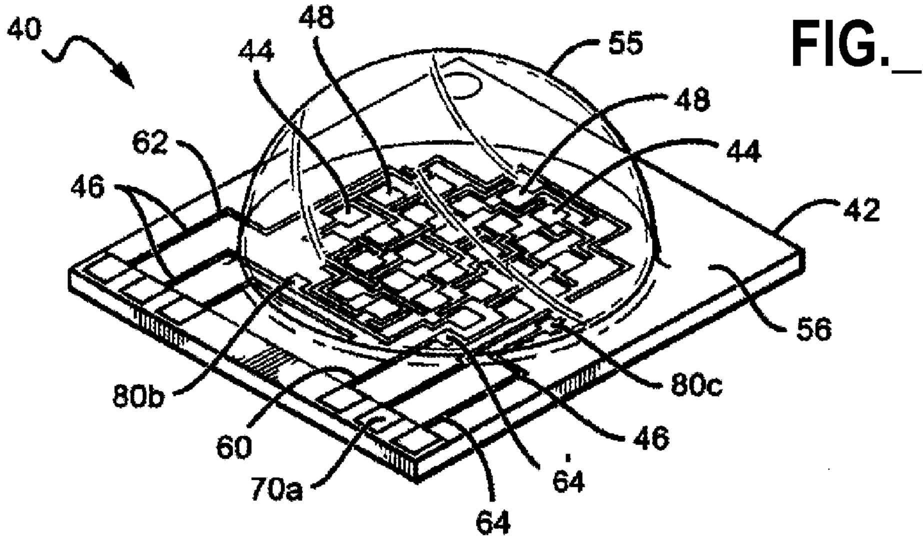

FIG._2A

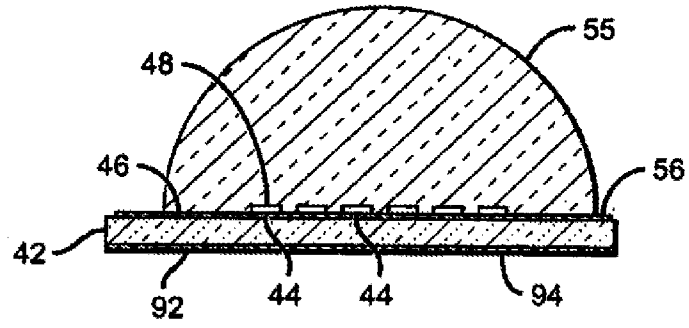

FIG._2B

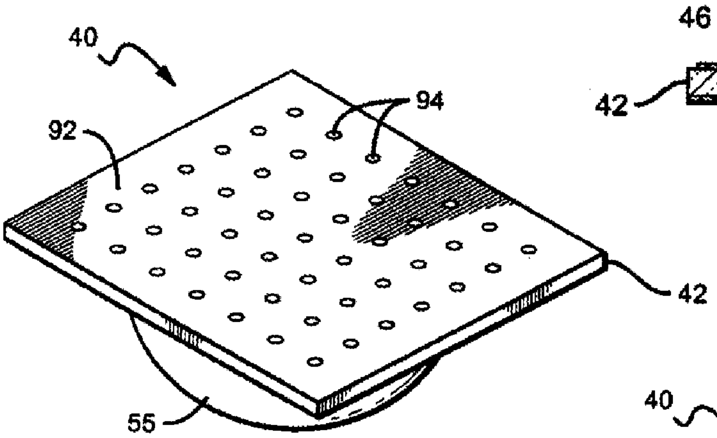

FIG._2C

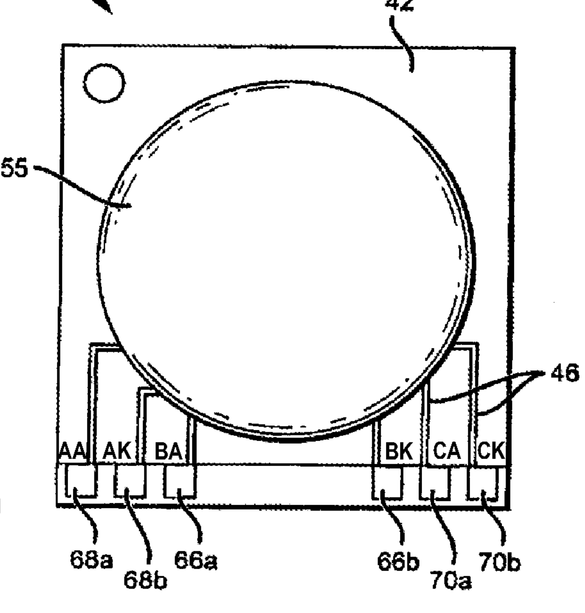

FIG._2D

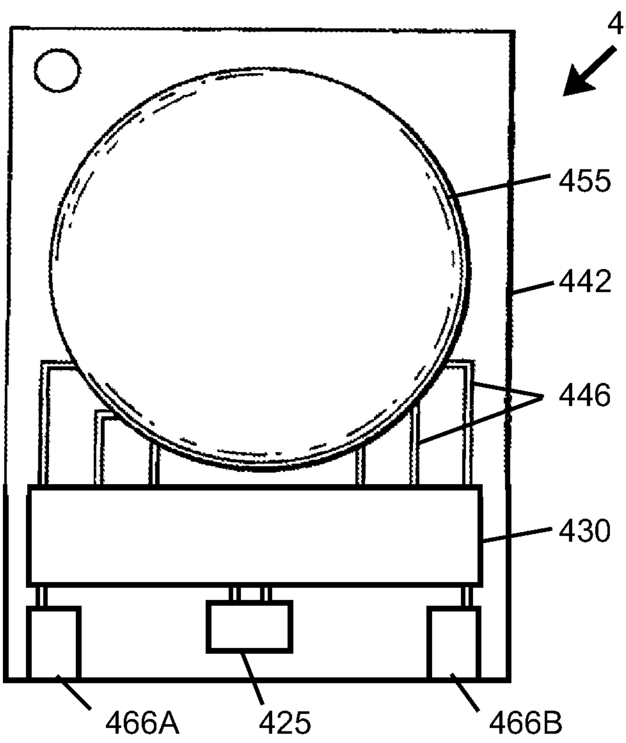
440
455
442
446
430
466A
425
466B

FIG._4

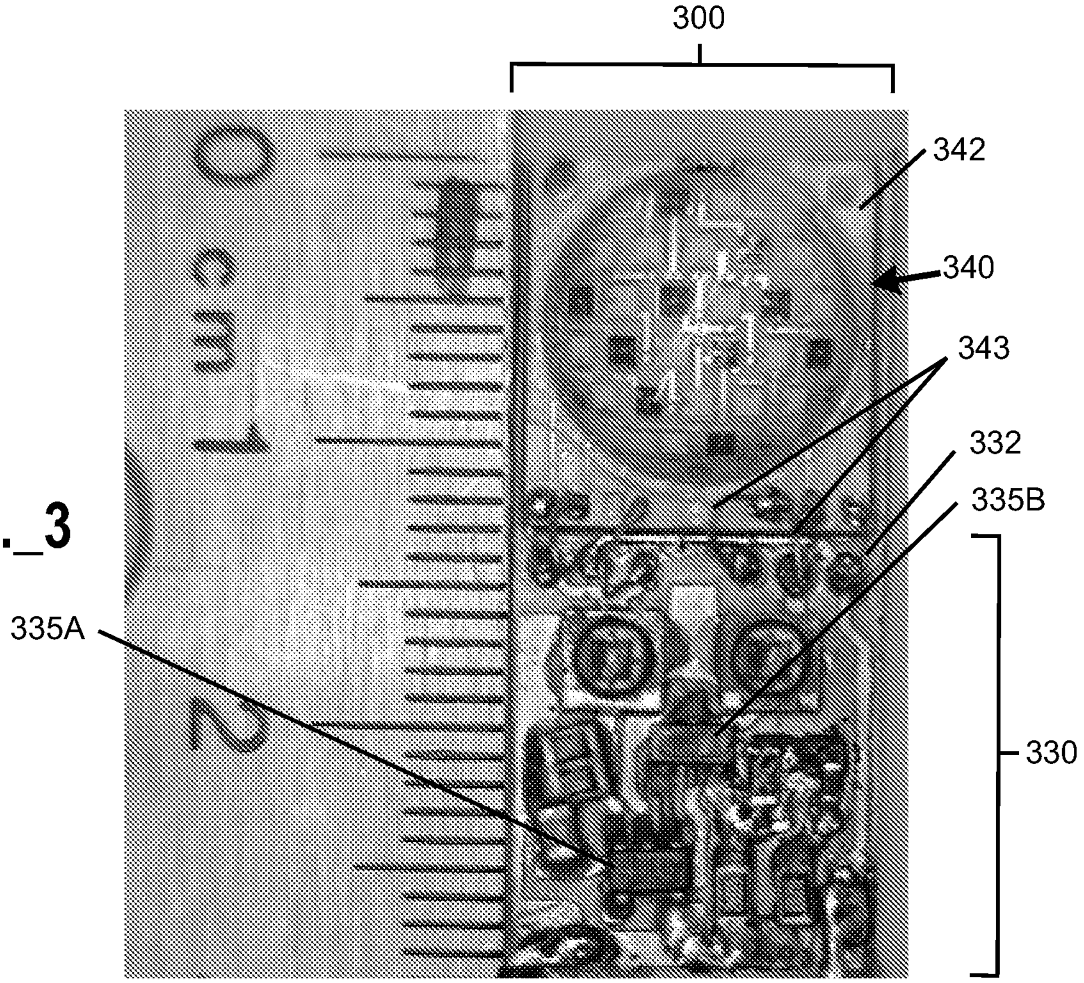
300
342
340
343
332
335B
335A
330
0
cm
1
2

FIG._3

FIG._5A

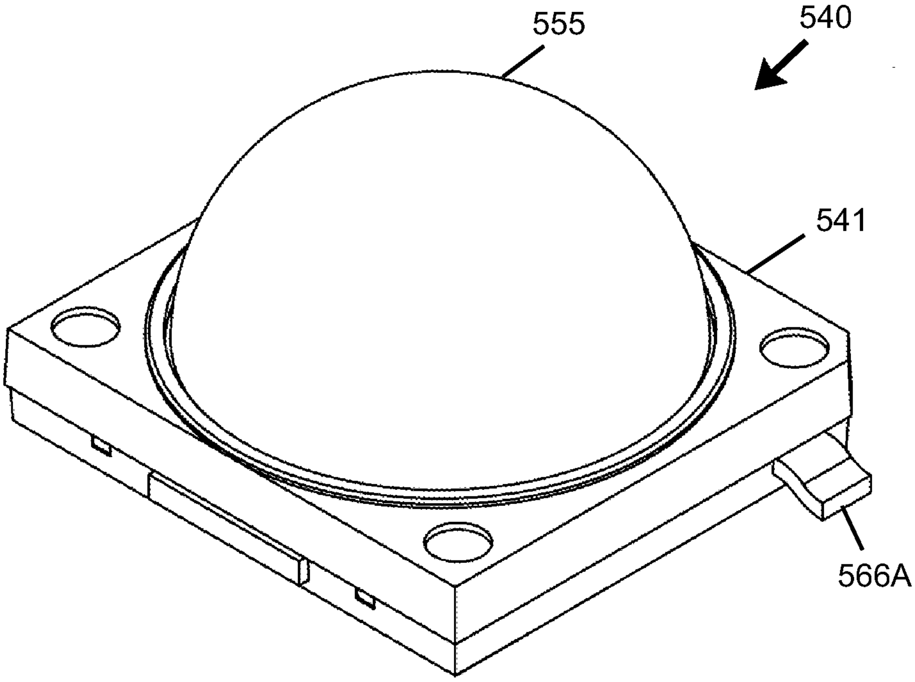
555
540
541
566A

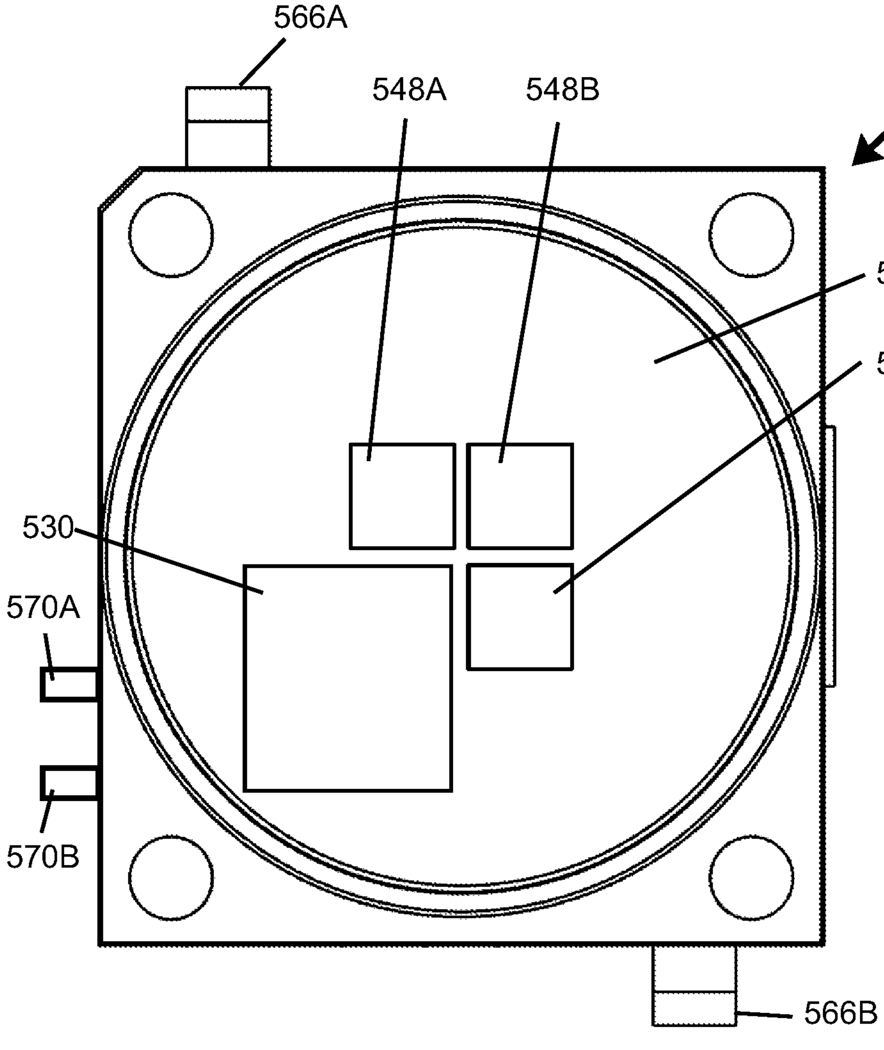
566A
548A
548B
540
542
548C
530
570A
570B
566B

FIG._5B

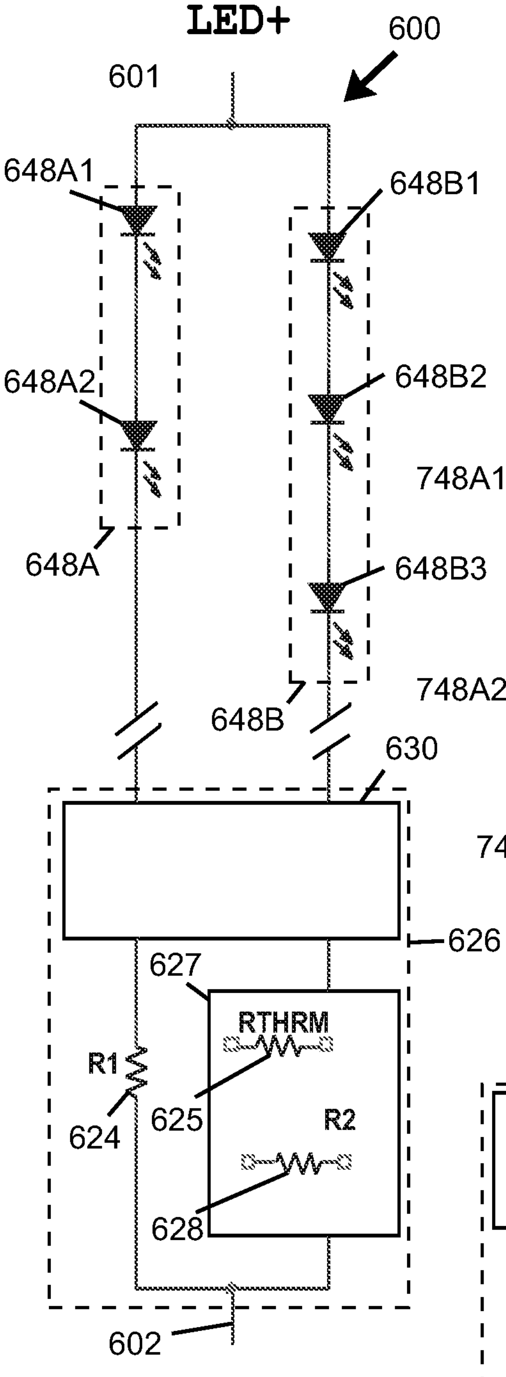

FIG._6

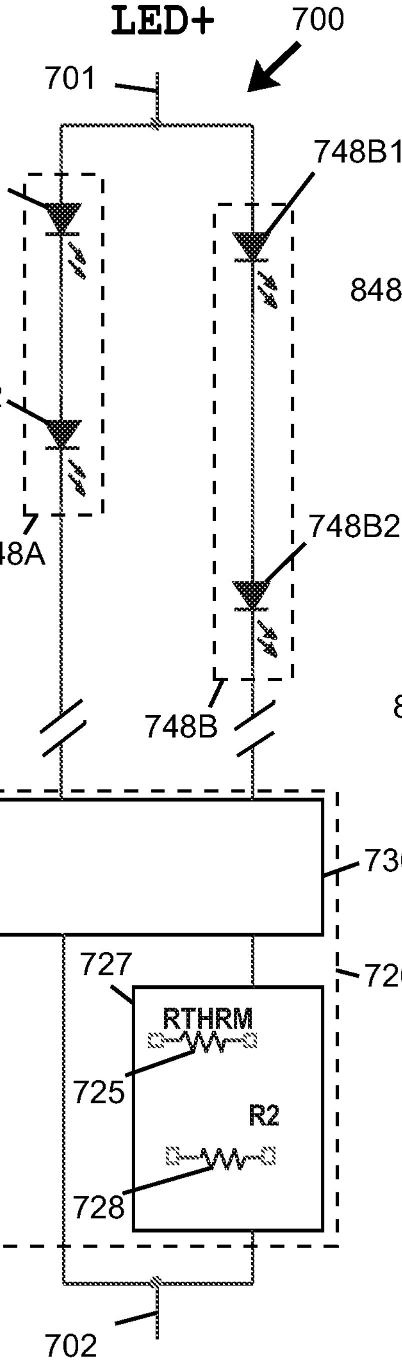

FIG._7

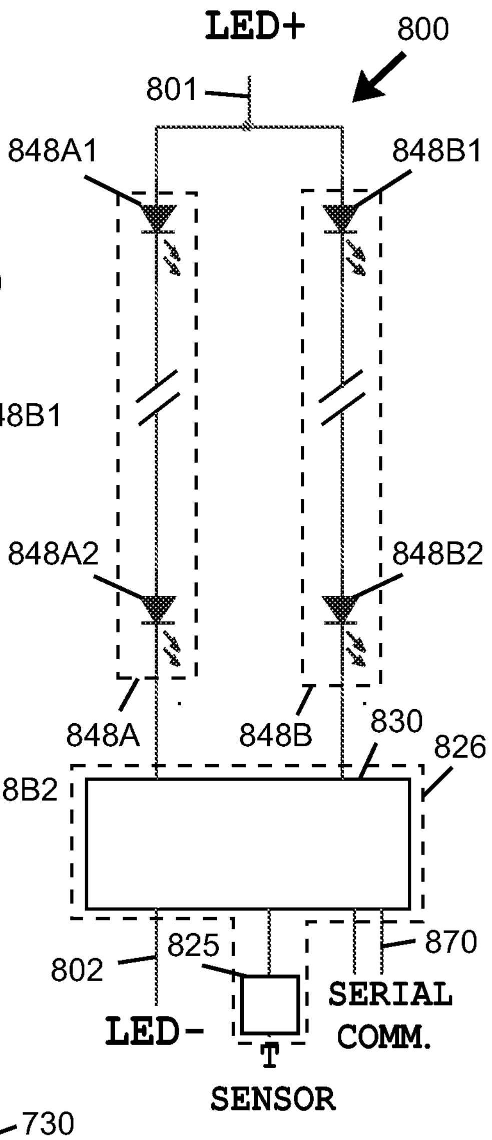

FIG._8A

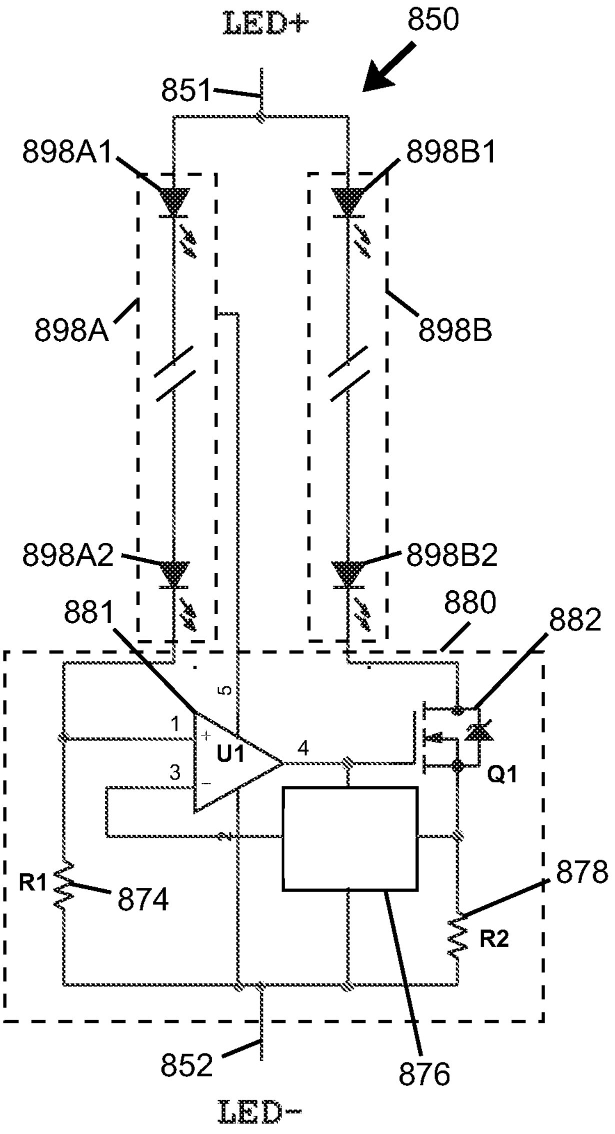

FIG._8B

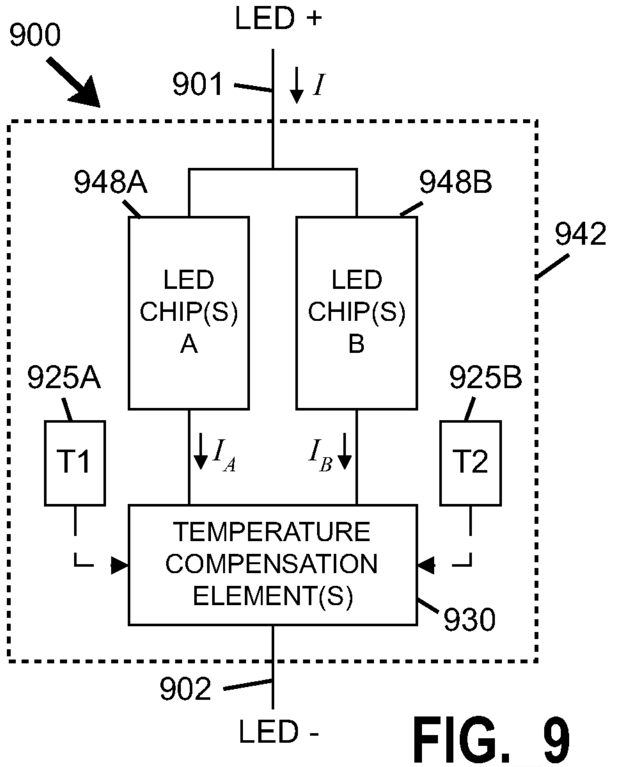

FIG._9

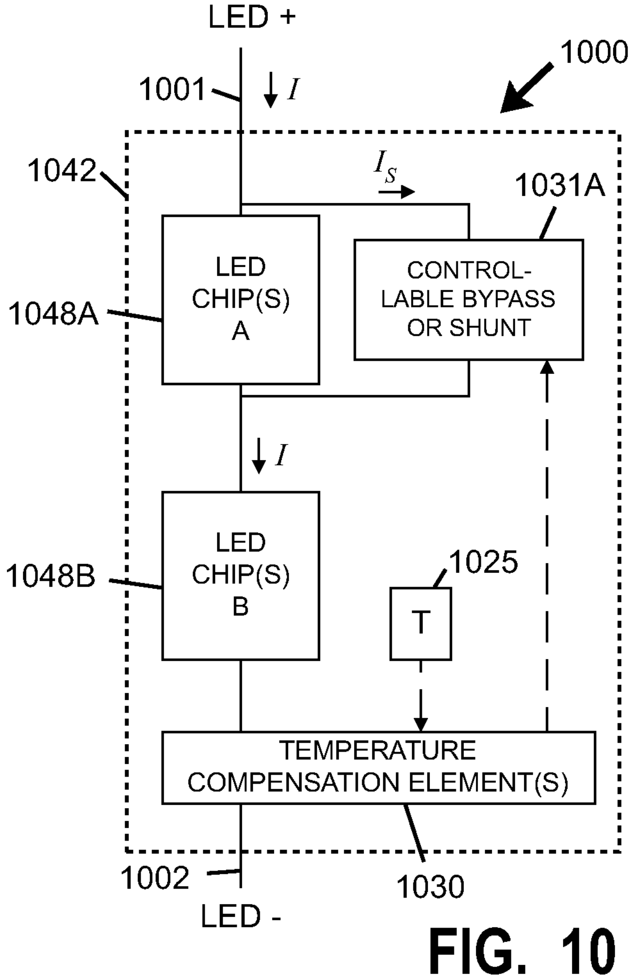

FIG._10

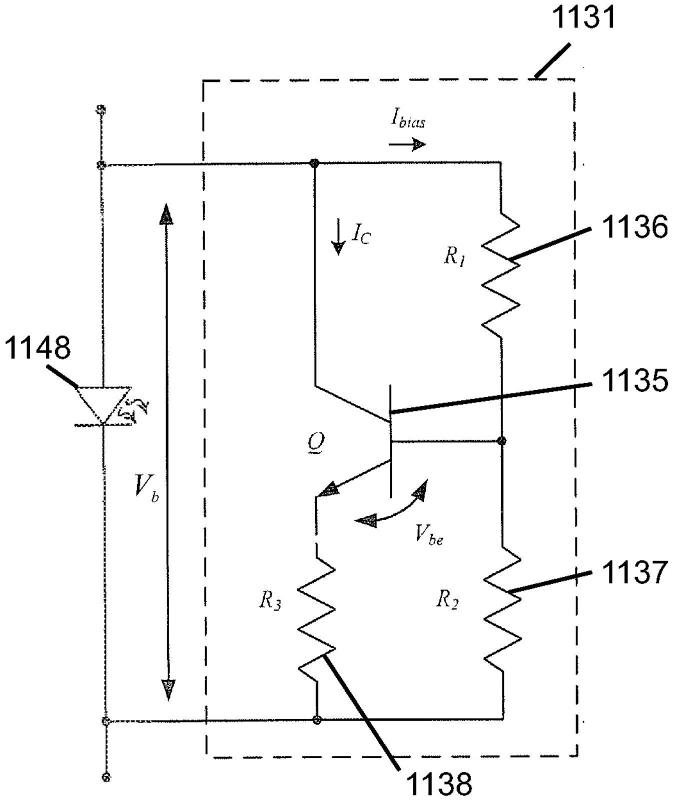
1131
I_{bias}
I_C
R_1
1136
1148
1135
Q
V_b
V_{be}
1137
R_3
R_2
1138

FIG._11

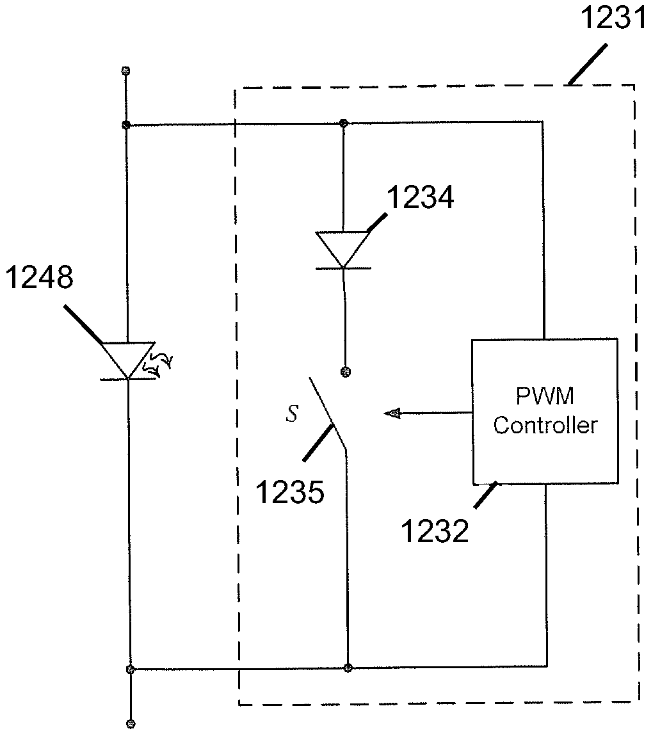
1231
1234
1248
PWM Controller
S
1235
1232

FIG._12

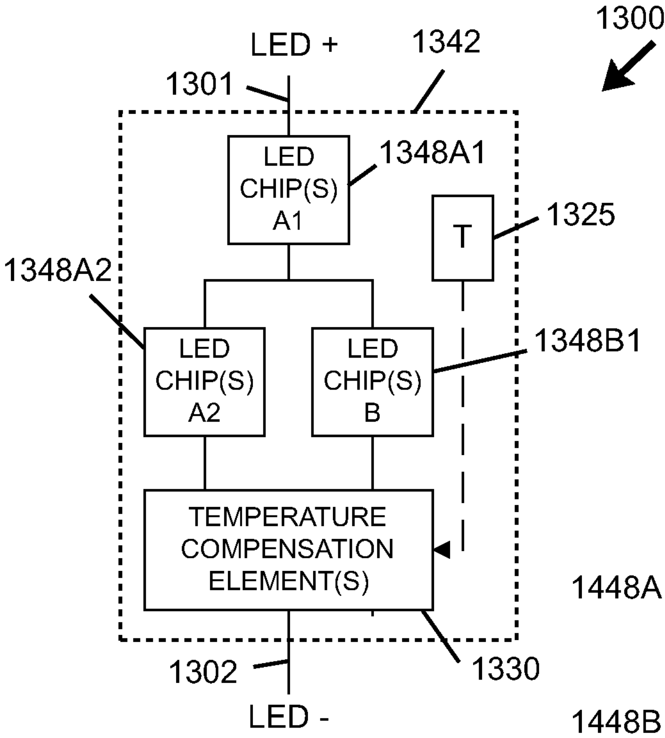
1300
LED +
1342
1301
LED CHIP(S) A1
1348A1
T
1325
1348A2
LED CHIP(S) A2
LED CHIP(S) B
1348B1
TEMPERATURE COMPENSATION ELEMENT(S)
1302
1330
LED -

FIG._13

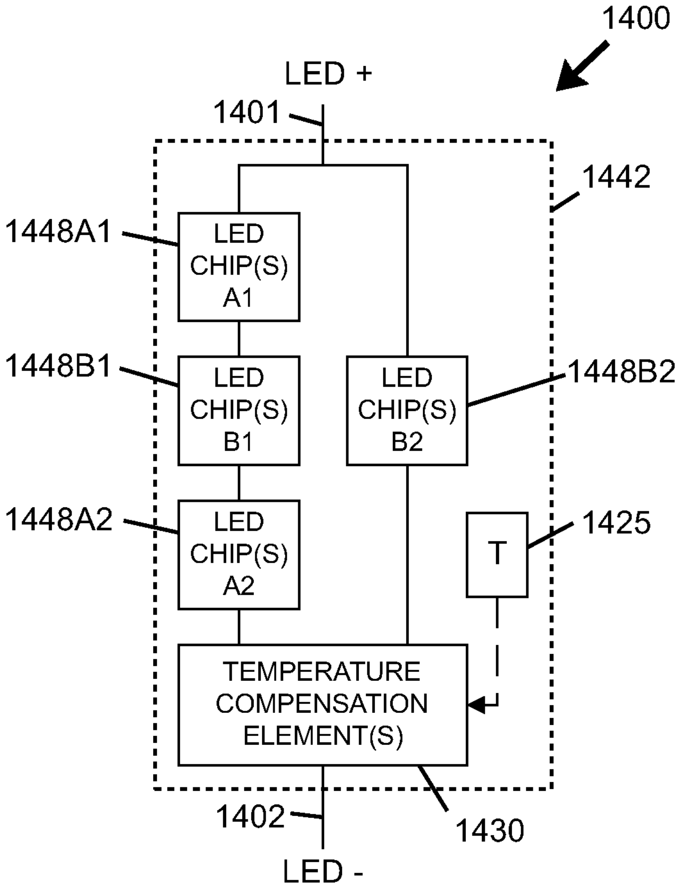
1400
LED +
1401
1442
1448A1
LED CHIP(S) A1
1448B1
LED CHIP(S) B1
LED CHIP(S) B2
1448B2
1448A2
LED CHIP(S) A2
T
1425
TEMPERATURE COMPENSATION ELEMENT(S)
1402
1430
LED -

FIG._14

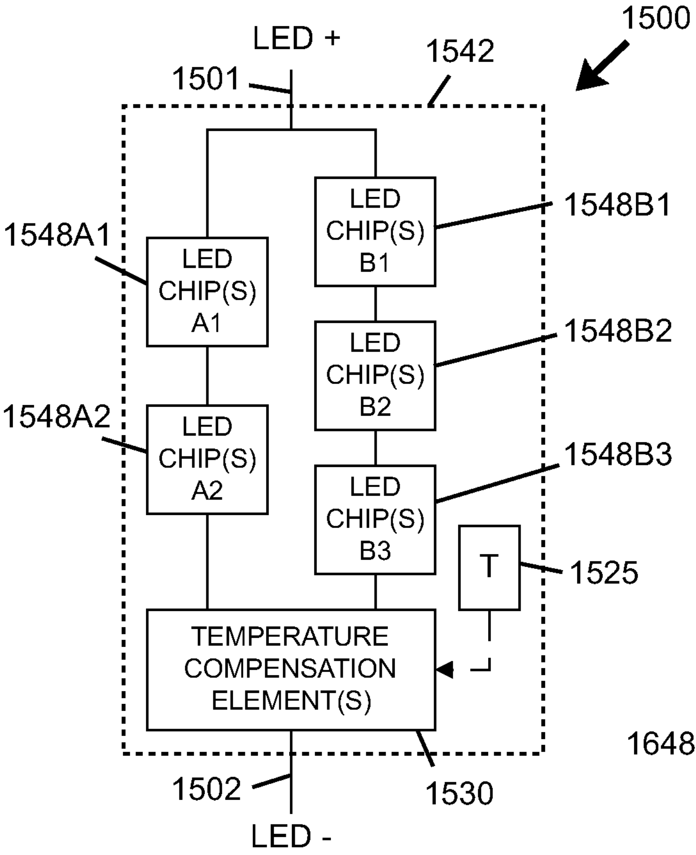
1500
LED +
1542
1501
LED CHIP(S) B1
1548B1
1548A1
LED CHIP(S) A1
LED CHIP(S) B2
1548B2
1548A2
LED CHIP(S) A2
1548B3
LED CHIP(S) B3
T
1525
TEMPERATURE COMPENSATION ELEMENT(S)
1502
1530
LED -

FIG._15

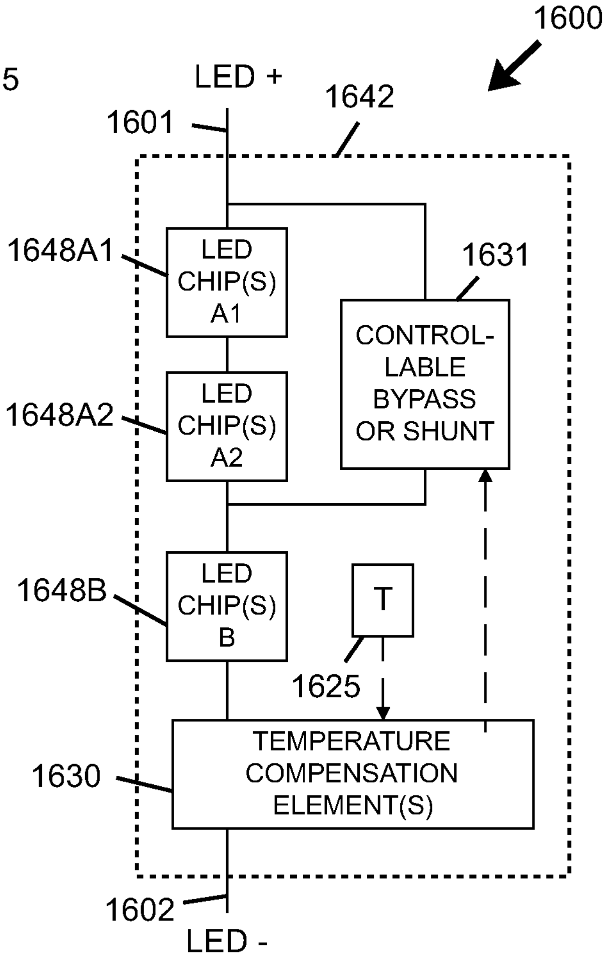
1600
LED +
1642
1601
1648A1
LED CHIP(S) A1
1631
CONTROL-LABLE BYPASS OR SHUNT
1648A2
LED CHIP(S) A2
1648B
LED CHIP(S) B
T
1625
1630
TEMPERATURE COMPENSATION ELEMENT(S)
1602
LED -

FIG._16

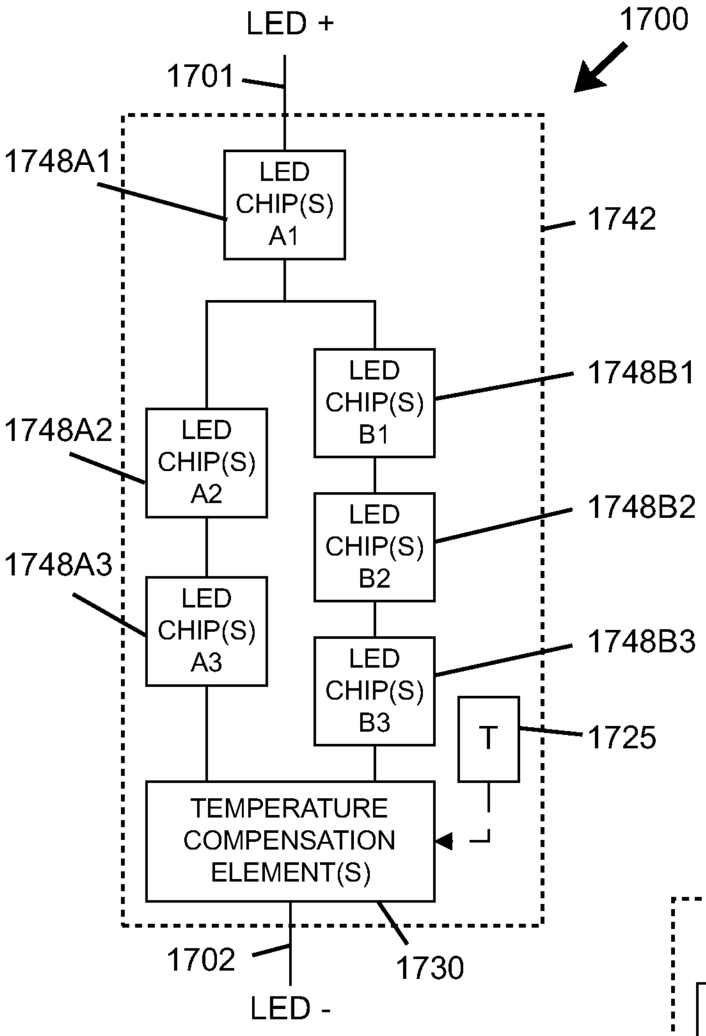
LED +
1700
1701
1748A1
LED CHIP(S) A1
1742
1748B1
LED CHIP(S) B1
1748A2
LED CHIP(S) A2
1748B2
LED CHIP(S) B2
1748A3
LED CHIP(S) A3
1748B3
LED CHIP(S) B3
T
1725
TEMPERATURE COMPENSATION ELEMENT(S)
1702
1730
LED -

FIG._17

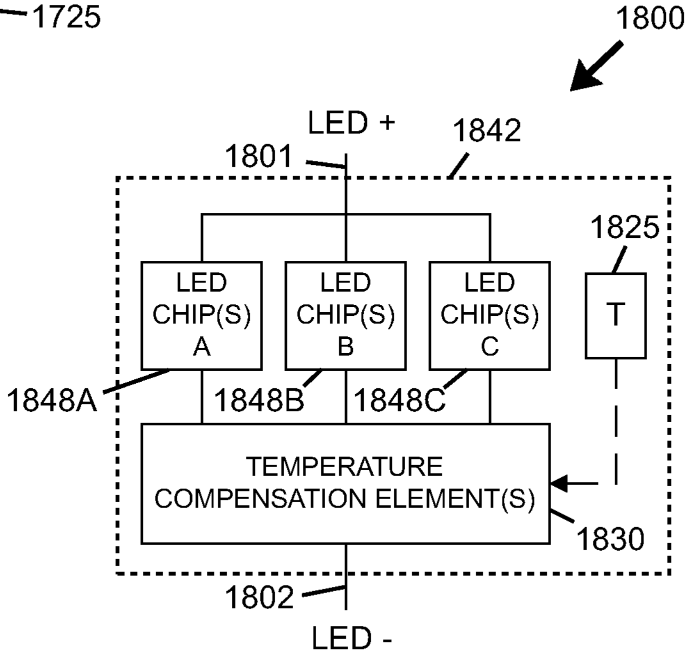
1800
LED +
1842
1801
1825
LED CHIP(S) A
LED CHIP(S) B
LED CHIP(S) C
T
1848A
1848B
1848C
TEMPERATURE COMPENSATION ELEMENT(S)
1830
1802
LED -

FIG._18

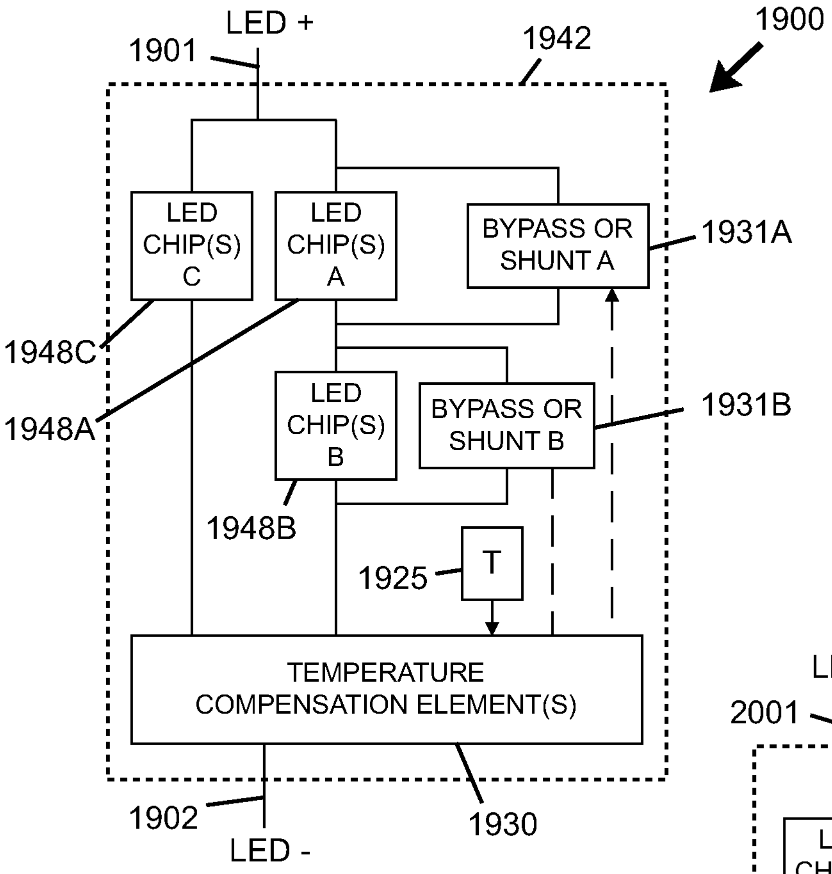
LED +
1901
1942
1900
LED CHIP(S) C
LED CHIP(S) A
BYPASS OR SHUNT A
1931A
1948C
1948A
LED CHIP(S) B
BYPASS OR SHUNT B
1931B
1948B
T
1925
TEMPERATURE COMPENSATION ELEMENT(S)
1902
LED -
1930

FIG._19

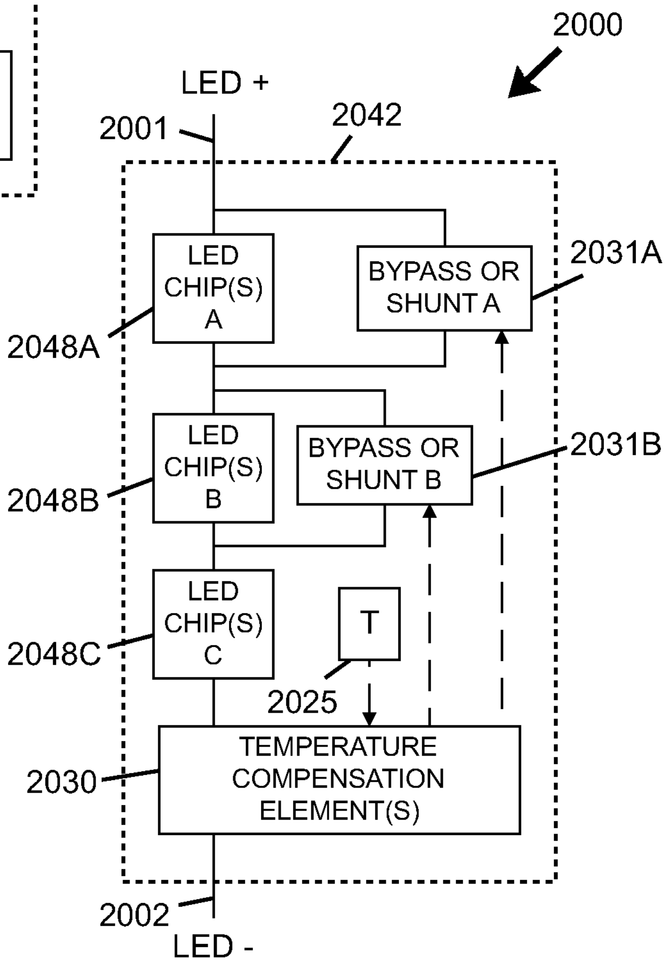
2000
LED +
2001
2042
LED CHIP(S) A
BYPASS OR SHUNT A
2031A
2048A
LED CHIP(S) B
BYPASS OR SHUNT B
2031B
2048B
LED CHIP(S) C
T
2048C
2025
TEMPERATURE COMPENSATION ELEMENT(S)
2030
2002
LED -

FIG._20

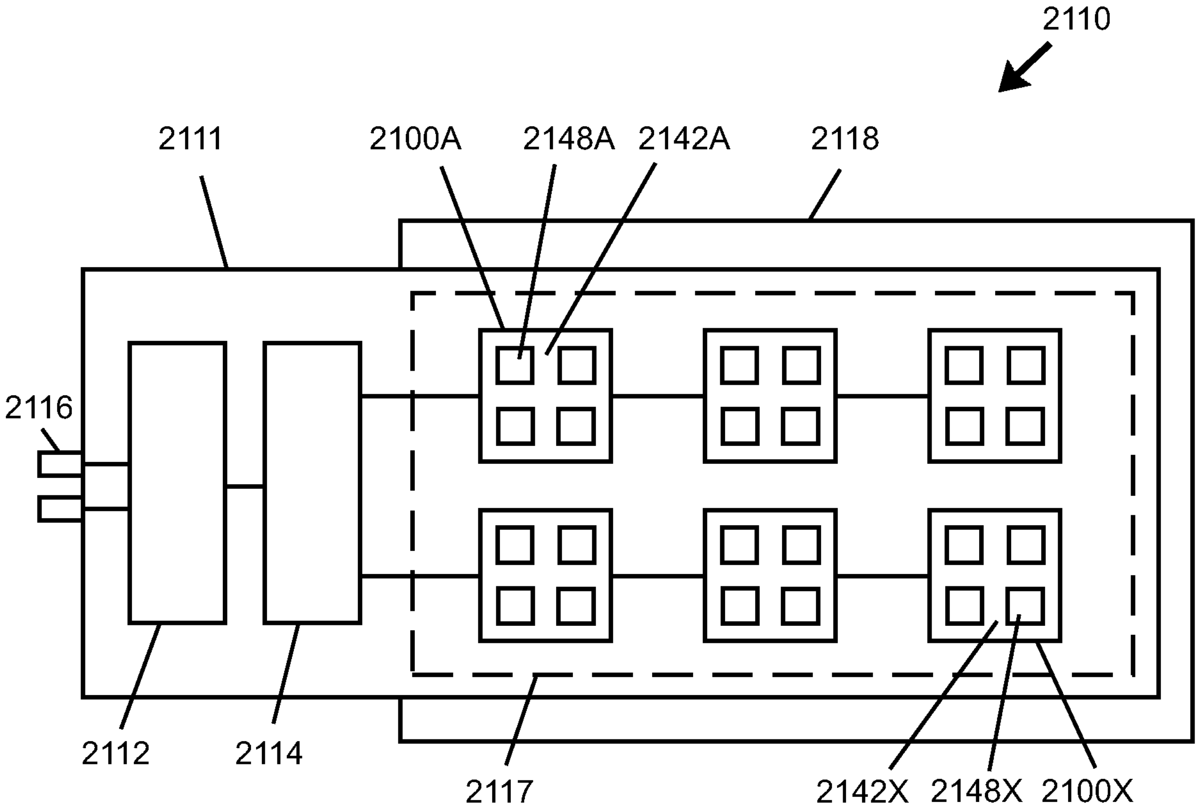
2110
2111
2100A
2148A
2142A
2118
2116
2112
2114
2117
2142X
2148X
2100X

FIG._21

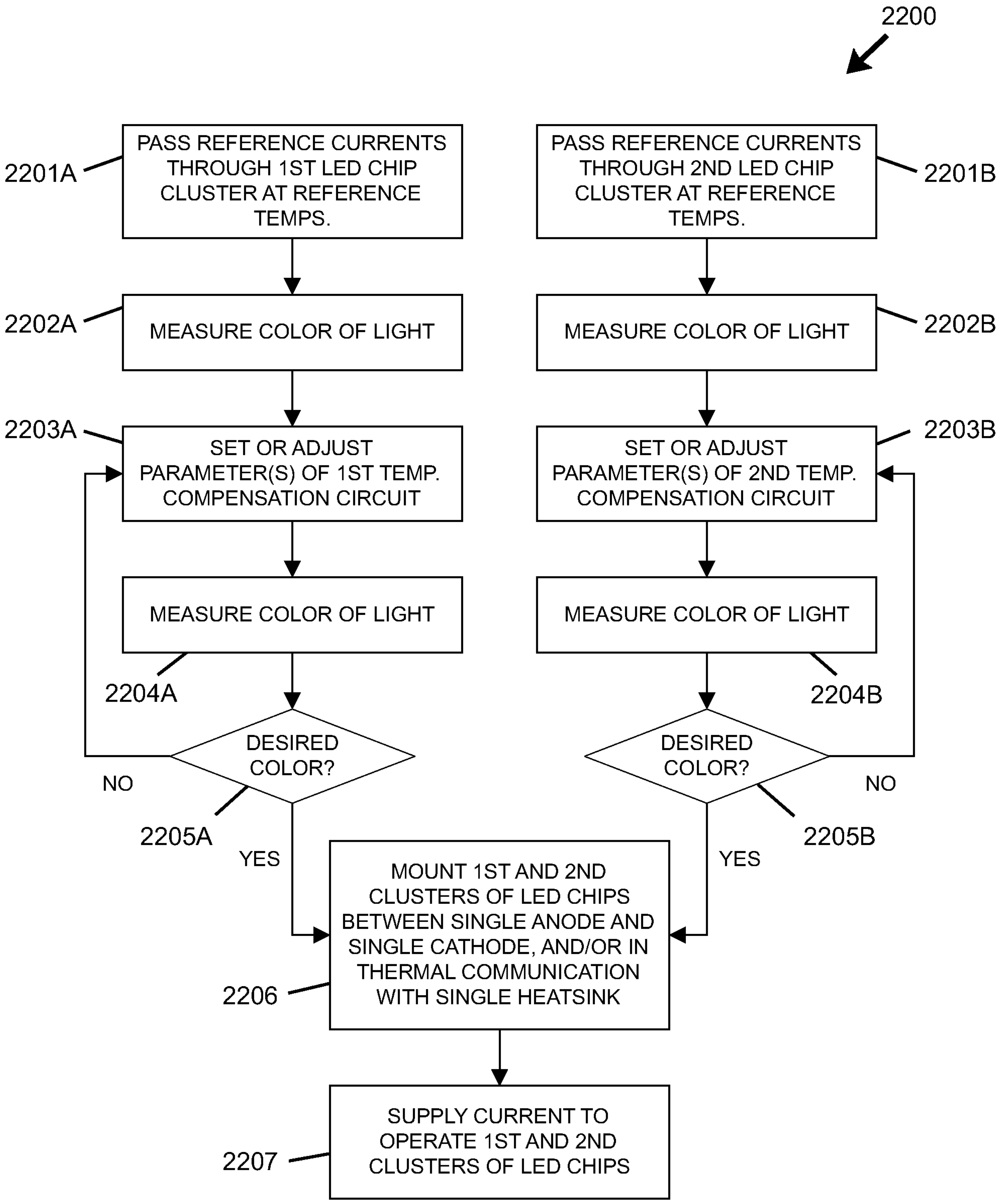
2200
2201A
PASS REFERENCE CURRENTS THROUGH 1ST LED CHIP CLUSTER AT REFERENCE TEMPS.
2201B
PASS REFERENCE CURRENTS THROUGH 2ND LED CHIP CLUSTER AT REFERENCE TEMPS.
2202A
MEASURE COLOR OF LIGHT
2202B
MEASURE COLOR OF LIGHT
2203A
SET OR ADJUST PARAMETER(S) OF 1ST TEMP. COMPENSATION CIRCUIT
2203B
SET OR ADJUST PARAMETER(S) OF 2ND TEMP. COMPENSATION CIRCUIT
MEASURE COLOR OF LIGHT
2204A
MEASURE COLOR OF LIGHT
2204B
DESIRED COLOR?
NO
2205A
YES
DESIRED COLOR?
NO
2205B
YES
MOUNT 1ST AND 2ND CLUSTERS OF LED CHIPS BETWEEN SINGLE ANODE AND SINGLE CATHODE, AND/OR IN THERMAL COMMUNICATION WITH SINGLE HEATSINK
2206
SUPPLY CURRENT TO OPERATE 1ST AND 2ND CLUSTERS OF LED CHIPS
2207

FIG._22

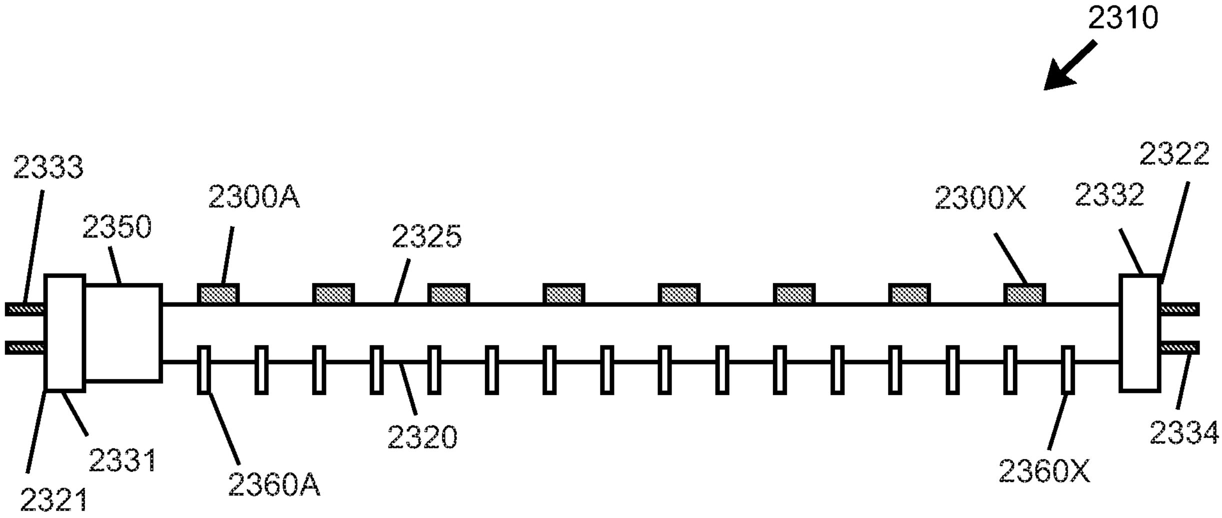
2310
2333
2350
2300A
2325
2300X
2332
2322
2321
2331
2360A
2320
2360X
2334

FIG._23

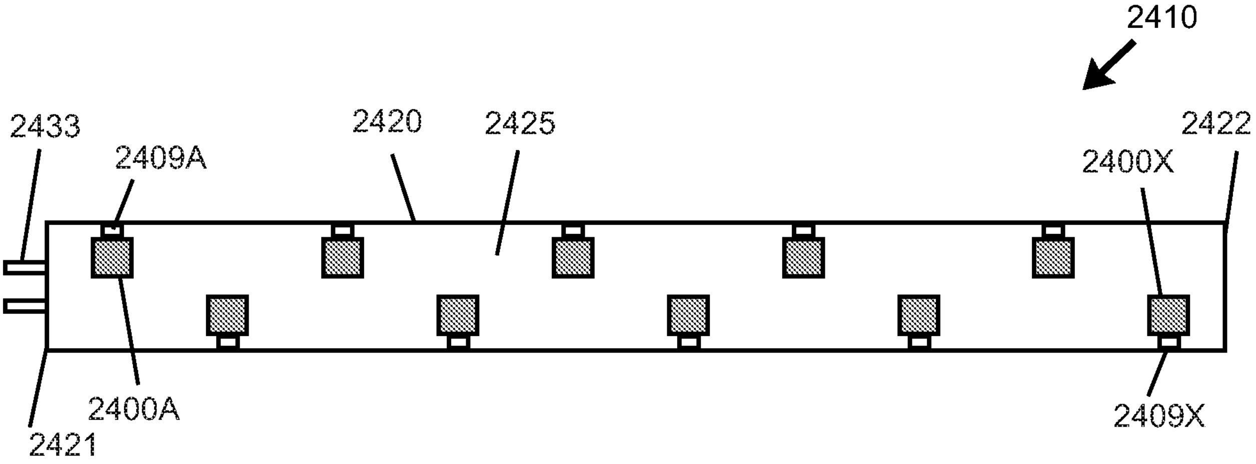
2410
2433
2409A
2420
2425
2422
2400X
2400A
2421
2409X

FIG._24