April 16, 1968 J. A. SHORB 3,377,893

WRENCH HAVING PIVOTED JAWS ADJUSTABLE BY A LOCKABLE EXTERIOR CAMMING SLEEVE

Filed March 6, 1967

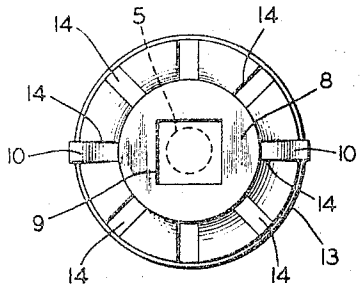

Fig. 2

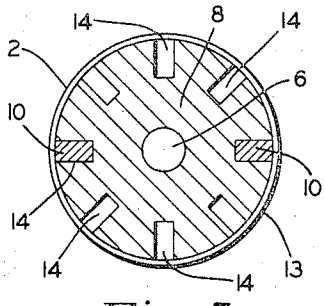

Fig. 5

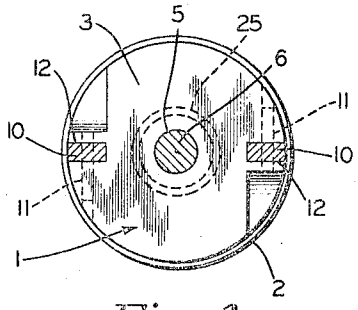

Fig. 6

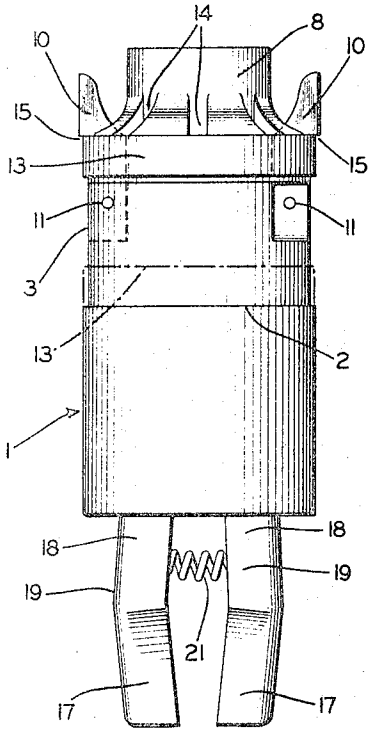

Fig. 1

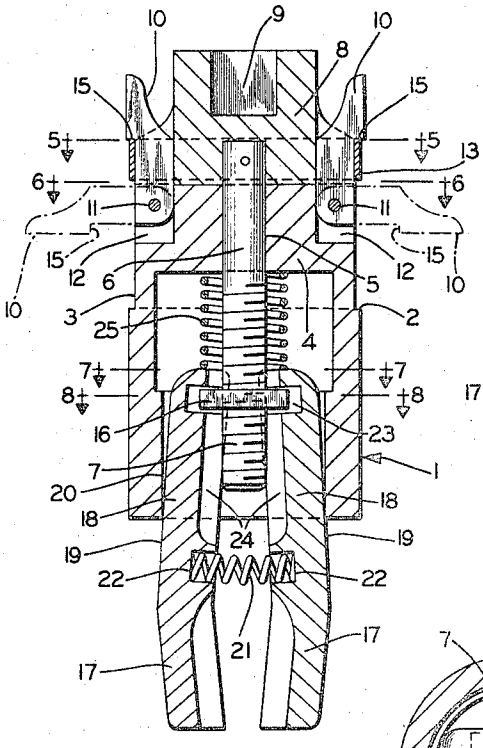

Fig. 4

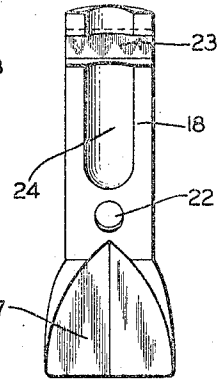

Fig. 9

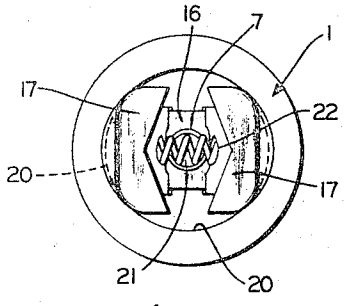

Fig. 3

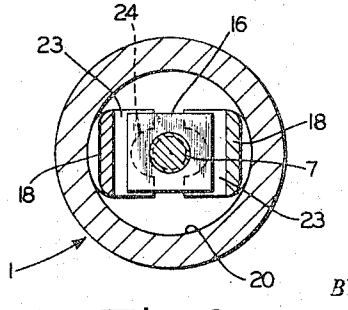

Fig. 8

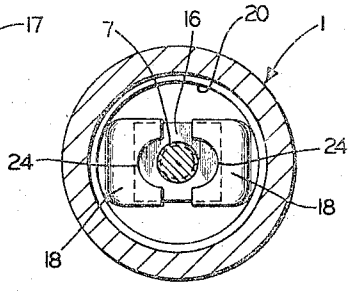

Fig. 7

INVENTOR.

John A. Shorb

BY

Frease & Bishop

ATTORNEYS

United States Patent Office 3,377,893 Patented Apr. 16, 1968

3,377,893

WRENCH HAVING PIVOTED JAWS ADJUSTABLE BY A LOCKABLE EXTERIOR CAMMING SLEEVE

John A. Shorb, 339 Wilson St.,
Malvern, Ohio 44644

Filed Mar. 6, 1967, Ser. No. 620,734
5 Claims. (Cl. 81—113)

ABSTRACT OF THE DISCLOSURE

An adjustable socket wrentch having a tubular body portion with two jaws longitudinally slidable therein forced together by the side walls of the tubular body when drawn within the same and automatically forced apart when forced out of the tubular body by a nut located between them and a screw threaded therethrough. A cap fixed upon one end of the screw has radial slots to selectively receive a pair of wings pivotally mounted on the body, a locking ring being slidable over said wings to lock the jaws in adjusted position.

Background of the invention

(1) *Field of the invention.*—The invention relates to adjustable socket wrenches and more particularly to such a wrench having a clamping-type chuck in which a pair of jaws are longitudinally slidable within a tubular body by means for adjusting the jaws relative to each other. Means is provided for locking the adjusting means in position to hold the jaws in desired adjusted position.

(2) *Description of the prior art.*—Socket wrenches have been proposed comprising a clamping-type chuck in which a pair of jaws are longitudinally slidable through a tubular member for adjusting the jaws relative to each other, but it is not know that any such device included means such as disclosed herein for locking the jaws in adjusted position.

Summary of the invention

The invention may be described in general terms as an adjustable socket wrench comprising a cylindrical tubular body closed at one end, a pair of jaws with cam outer surfaces being longitudinally slidable within the tubular body.

A screw is rotatably located through the closed end of the body and threaded through a nut which engages grooves in the inner ends of the jaws for moving them longitudinally through the tubular body to adjust the positions of the outer ends of the jaws relative to each other.

Spring means is provided for urging the cam surfaces of the jaws into contact with the interior of the tubular body, and other spring means is provided in the form of a coil spring located around the screw and interposed between the closed end of the tubular body and the inner ends of the jaws.

A cap is fixed to the end of the screw and is provided with a plurality of radially disposed grooves in its periphery. Wings are pivotally mounted in radially disposed grooves in the periphery of the body and adapted to be selectively received in the grooves in the cap to hold the jaws in adjusted position, and a locking ring is provided for locking the wings in position in the grooves of the cap.

It is, therefore, an object of the invention to provide an adjustable socket wrench having a clamping-type chuck and means for locking the jaws thereof in adjusted position.

Another object of the invention is to provide such an adjustable socket wrench having a body portion with a rotatable cap thereon, wings pivotally mounted in radial grooves in the body and selectively received into a plurality of radial grooves in the cap, and a locking ring slidable upon the body and cap for locking the wings in selected grooves in the cap for locking the jaws in adjusted position.

These and other objects, apparent from the drawing and following description, may be attained, the above described difficulties overcome and the advantages and results obtained, by the apparatus, construction, arrangement and combinations, subcombinations and parts which comprise the present invention, a preferred embodiment of which, illustrative of the best mode in which applicant has contemplated applying the principle, being set forth in detail in the following description and illustrated in the accompanying drawing.

Brief description of the drawing

FIG. 1 is a side elevation of a preferred embodiment of an adjustable socket wrench constructed in accordance with the invention;

FIG. 2 is a top plan view of the socket wrench shown in FIG. 1;

FIG. 3 is a bottom plan view of the wrench shown in FIG. 1;

FIG. 4 is a longitudinal sectional view of the wrench shown in FIG. 1;

FIG. 5 is a transverse section through the rotatable cap, taken on the line **5—5**, FIG. 4;

FIG. 6 is a transverse section between the tubular body and the cap, taken on the line **6—6**, FIG. 4;

FIG. 7 is a transverse section through the body above the jaws, taken on the line **7—7**, FIG. 4;

FIG. 8 is a transverse section through the body and the grooves in the jaws, taken on the line **8—8**, FIG. 4; and

FIG. 9 is a detached elevation of the inner side of one of the jaws of the wrench.

Description of the preferred embodiment

Referring now more particularly to the embodiment of the invention illustrated, the improved adjustable socket wrench to which the invention pertains includes a tubular body indicated generally at **1**, which is preferably generally cylindrical in shape, provided with the exterior shoulder **2** spaced from its upper end, the portion of the body above said shoulder being of slightly reduced diameter as shown at **3**.

The upper end portion of the body **1** is closed, as indicated at **4** in FIG. 4, and has a central, longitudinal bore **5** therethrough. The unthreaded shank **6** of an operating screw **7** is journalled within the bore **5** and has the circular cap **8** fixed upon the upper end thereof by any usual and well known means. The rotating cap **8** has a square hole **9** formed therein for receiving the standard square drive found in most ratchet wrenches.

A pair of locking wings **10** are pivoted as by the pins **11** in diametrically opposite radial grooves **12** in the body **1**. The locking wings **10** are normally disposed radially as shown in broken lines in FIG. 4 in order that the cap **8** may be rotated relative to the body **1**.

A slip ring **13** is slidably mounted upon the upper reduced portion **3** of the body **1** and may rest upon the shoulder **2**, as shown in broken lines in FIG. 1, when the locking wings **10** are in the broken line position of FIG. 4.

A plurality of radial grooves **14** are provided in the cap **8** to selectively receive the locking wings **10** when they are raised to the locking position as shown in full lines in FIGS. 1, 2, 4 and 5. The slip ring **13** is then moved up to the locking position, as shown in full lines in FIGS. 1 and 4, the upper edge thereof engaging the shoulders **15** upon the locking wings holding the cap **8** in adjusted position relative to the body **1**.

A rectangular nut **16** is threaded upon the threaded

lower portion of the screw 7 and adapted to be moved up or down upon the screw by rotation of the cap in proper direction, for adjusting the jaws 17 toward or from each other as desired.

Each of the jaws 17 has an upwardly disposed extension 18 with an outer cam surface 19 held in contact with the lower portion of the inner wall 20 of the tubular body 1 by a coil spring 21, interposed between the two jaws, the ends of the spring being received in the recesses 22 in the jaws.

Opposed grooves 23 are formed in the upwardly disposed extensions 18 of the jaws to receive opposite side portions of the nut 16. The inner side of the upper extension 18 of each jaw is longitudinally recessed at 24 to provide clearance for the screw 7.

A coil spring 25 surrounds the screw 7 and is interposed between the closed upper end 4 of the body and the upper ends of the extensions 18 upon the jaws so as to hold the cap 8 in rotatable contact with the upper end of the body 1 and also to hold the extensions 18 of the jaws in contact with the nut 16.

Operation

In order to adjust the jaws 17, the slip ring 13 is moved down to the broken line position shown in FIG. 1, releasing the pivoted locking wings 10, so that they may be moved out of engagement with the grooves 14 in the cap, to the position shown in broken lines in FIG. 4.

This will permit rotation of the cap 8 relative to the body 1. By rotating the cap 8 in a direction to move the nut 16 upward upon the screw 7, the jaws 17 will be drawn upward into the tubular body 1, the cam surfaces 19 upon the extensions 18 of the jaws engaging the inner wall of the tubular body and forcing the jaws 17 toward each other, the spring 25 being compressed as the nut and jaws are moved upward holding the upper surfaces of the grooves 23 in the extensions 18 of the jaws in contact with the nut 15 and holding the cap in rotatable contact with the body.

At the same time, the coil spring 21 will be compressed by the movement of the jaws 17 toward each other. When the desired adjustment of the jaws 17 is reached, the cap is then rotated sufficiently to register the nearest diametrically opposed pair of grooves 14 therein with the grooves 12 in the body and the pivoted locking wings may be moved upward to the position shown in FIGS. 1 to 4 engaging said diametrically opposed pair of grooves 14 in the cap 8.

The slip ring 13 is then slidably moved up to the position shown in FIGS. 1 and 4 holding the pivoted locking wings 10 in this position and thus locking the jaws 17 in adjusted position.

The jaws 17 may then be placed over a bolthead or nut to be turned, and a standard square drive found in most ratchet wrenches may be inserted into the square hole 9 of the cap for operating the adjusted socket wrench in usual manner.

In order to adjust the jaws 17 farther apart, the slip ring 13 is moved down to the broken line position shown in FIG. 1, releasing the pivoted locking wings 10 so that they may be swung out of engagement with the selected grooves 14 in the cap, to the broken line position shown in FIG. 4, as above described.

The cap 8 may then be rotated relative to the body 1 in a direction to move the nut 16 downward thereon so as to force the jaws 17 out of the tubular housing, the spring 22 automatically forcing the jaws apart.

When the desired adjustment of the jaws is reached, the cap is then rotated sufficiently to register the nearest diametrically opposed pair of grooves 14 therein with the grooves 12 in the body and the pivoted locking wings 10 are moved back to folded or upright position engaging said pair of grooves 14 and the slip ring 13 is moved up to the full line position shown in FIGS. 1 and 4 locking the jaws in adjusted position.

From the above it will be obvious that the adjustable socket wrench emboding the invention may be easily and readily adjusted to desired position by rotation of the cap 8 to the necessary extent in the proper direction, and the jaws locked in this position by folding the pivoted wings 10 into the proper grooves 14 of the cap and raising the slip ring 13 to hold the wings therein, thus holding the jaws in adjusted position.

In the foregoing description certain terms have been used for brevity, clearness and understanding, but no unnecessary limitations are to be implied therefrom beyond the requirements of the prior art, because such words are used for descriptive purposes herein and are intended to be broadly construed.

Moreover, the embodiments of the improved construction illustrated and described herein are by way of example, and the scope of the present invention is not limited to the exact details of construction.

Having now described the invention or discovery, the construction, the operation, and use of preferred embodiments thereof, and the advantageous new and useful results obtained thereby; the new and useful construction, and reasonable mechanical equivalents thereof obvious to those skilled in the art, are set forth in the appended claims.

I claim:

1. An adjustable socket wrench of the type comprising a tubular body, two jaw members slidably mounted in the tubular body, means including a rotatable screw for drawing the jaws within the tubular body to force them toward each other and for pushing the jaws out of the tubular body to force them apart, and a cap fixed to the screw for rotating it, characterized by locking means on the body and means on the cap for engagement by the locking means to prevent rotation of the cap relative to the tubular body for locking the jaws in adjusted position, said locking means including pivoted locking wing means and said means for engagement including groove means in the cap for receiving said wing means.

2. An adjustable socket wrench as defined in claim 1, in which said locking means includes a slip ring upon the tubular body adapted to be moved onto the cap for holding the pivoted locking wing means in the groove means.

3. An adjustable socket wrench as defined in claim 1, in which said locking wing means includes a pair of diametrically opposed locking wings pivotally mounted on the tubular body and said groove means includes a plurality of radially disposed grooves in the cap for selectively receiving the locking wings.

4. An adjustable socket wrench as defined in claim 3, in which said locking means includes a slip ring upon the tubular body adapted to be moved onto the cap for holding the pivoted locking wings in the radial grooves.

5. An adjustable socket wrench as defined in claim 4, in which there is a shoulder on the tubular body for engaging the slip ring in unlocked position and shoulders on the pivoted locking wings for engaging the slip ring in locked position.

References Cited

UNITED STATES PATENTS

1,600,645	9/1926	Smith	81—114
3,158,411	11/1964	Moulin	81—113 X

FOREIGN PATENTS

414,066	6/1946	Italy.

MILTON S. MEHR, *Primary Examiner.*