July 10, 1956

F. GFELLER

2,754,225

METHOD OF SPRAY-COATING WITH METALS

Filed Nov. 18, 1952

2 Sheets-Sheet 1

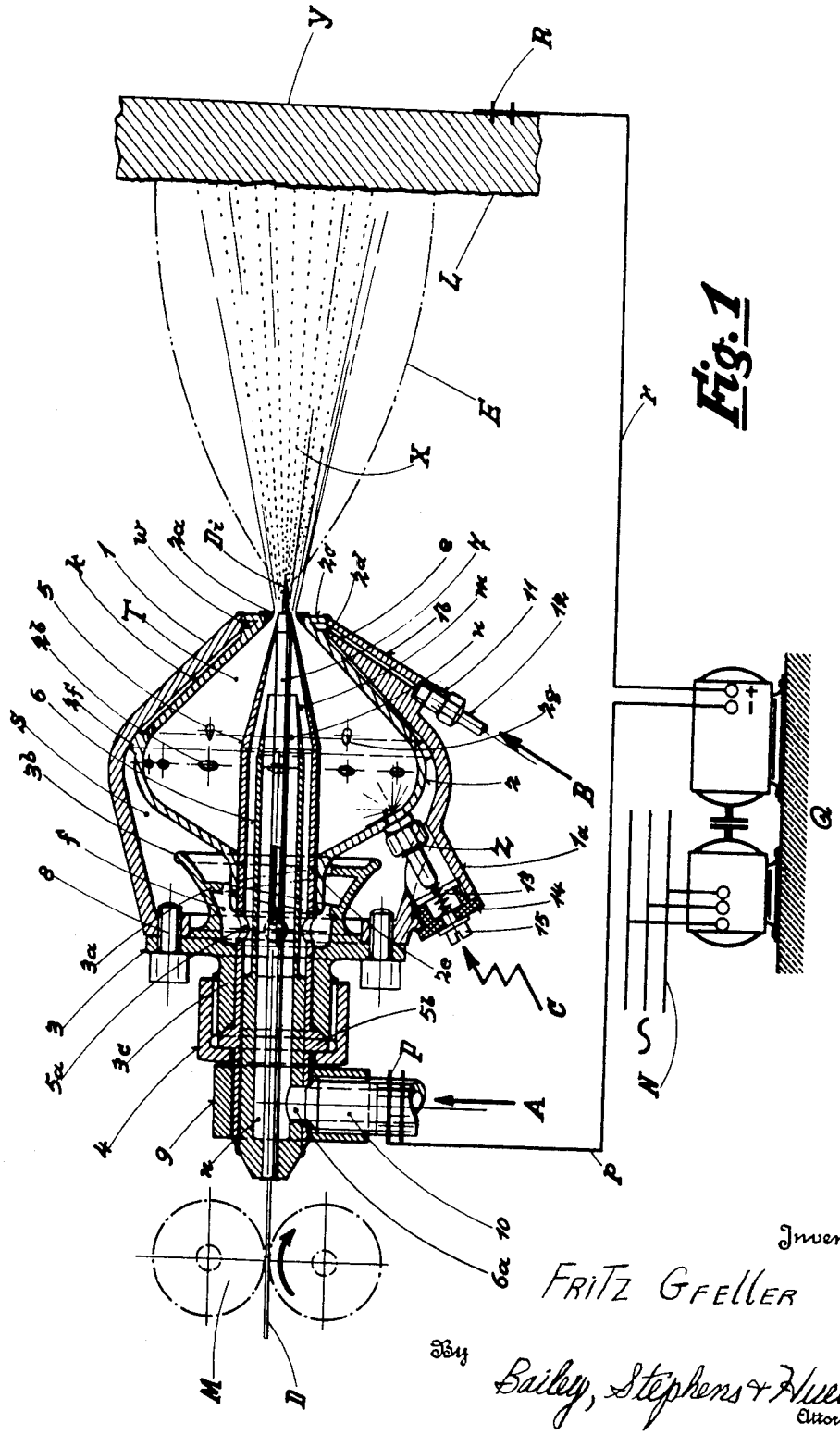

Fig. 1

Inventor

FRITZ GFELLER

By Bailey, Stephens & Huettig

Attorneys

July 10, 1956 F. GFELLER 2,754,225

METHOD OF SPRAY-COATING WITH METALS

Filed Nov. 18, 1952

2 Sheets-Sheet 2

Fig. 2.

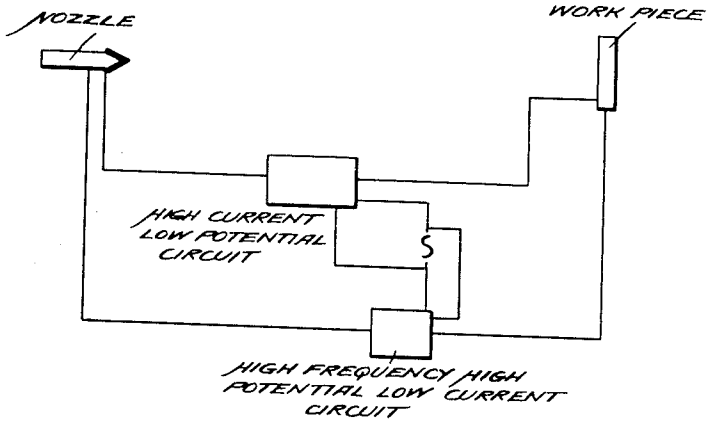

Fig. 3.

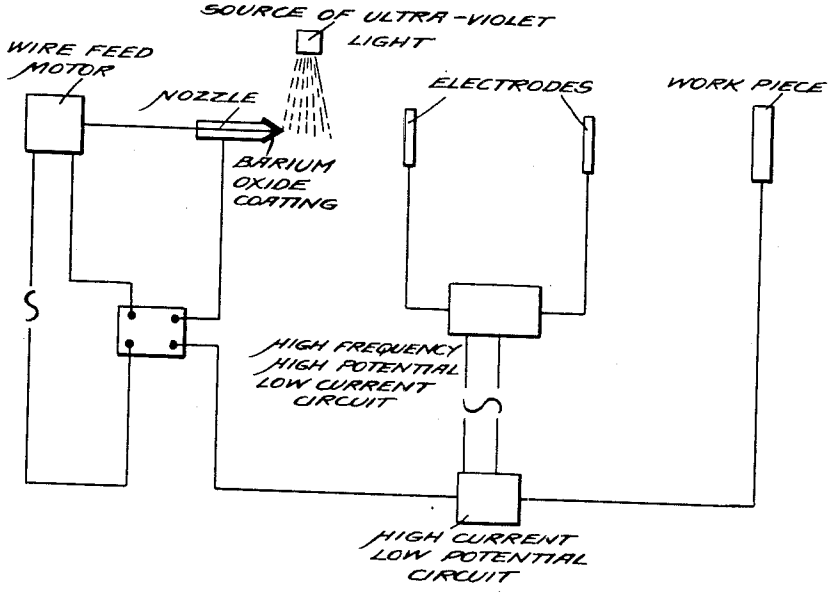

INVENTOR

FRITZ GFELLER

BY Bailey, Stephens & Huettig

ATTORNEYS

United States Patent Office 2,754,225 Patented July 10, 1956

2,754,225

METHOD OF SPRAY-COATING WITH METALS

Fritz Gfeller, Zurich, Switzerland, assignor to Martin von Schulthess, Zurich, Switzerland

Application November 18, 1952, Serial No. 321,151

Claims priority, application Switzerland November 22, 1951

3 Claims. (Cl. 117—93)

This invention relates to a method of spray-coating with metals and particularly to a simultaneous bonding of the sprayed metal particles with each other and with the surface to be sprayed, by the additional use of electrical energy.

The metal spray-coating methods known to the art have the disadvantage that the coating formed by these methods is composed of individual particles of varied magnitude which are bonded with each other and with the surface to be coated only by surface contact. Such a bonding of the particles results in insufficient strength and density of the coating, which is spongy in texture and non-homogeneous and can relatively easily be peeled from the surface. Furthermore, the output of these methods of metal spray-coating known to the art, which derive the energy for melting the metal wire exclusively from the exothermic reaction of the burning gases, is insufficient and results in coatings which are unsatisfactory from the point of view of both quantity as well as quality, particularly in the case of metals having a high melting point.

The above-mentioned disadvantages are overcome by the method in accordance with the present invention by producing and discharging at least one electric field within the space between the point of the wire, which protrudes from the spray gun, and the surface of the body to be spray-coated. The electric field thus created acts in such a manner that by means of its discharge the protruding point of the wire, the surface to be spray-coated and the stream of atomized metal therebetween are furnished with substantial additional heat; the melting and the atomizing of the metal wire is thus increased and accelerated to a considerable degree, and the individual particles of metal which are projected against the surface to be coated are intimately bonded with each other and with the surface itself.

The method of spray-coating in accordance with the invention superimposes an electro-thermal action upon the known thermo-chemical action of metal spray-coating with burning gases. The latter method serves to melt, atomize and spray a metal upon a surface, whereas the superimposed electric field serves to increase the melting energy and subsequently to bond intimately the metal particles sprayed upon the surface with each other and with the surface itself. The two actions supplement each other, are a mutual prerequisite for each other, and together fulfill the task intended by the invention.

The exothermic reaction of the burning gases effects a melting or at least a glowing of the point of the protruding metal wire as well as a liberation of electrons whose number is still further increased by the electric effects on the glowing wire point. Because of the presence of these free electrons, the burning gases become electrically conductive, so that through an increase of the potential of the electric field created in the region between the wire point and the surface to be coated up to the spark potential a self-discharge can be brought about. However, it is not essential to increase the potential of the electric circuit

to the discharge point; it has proven to be more suitable to superimpose upon a main circuit of high current intensity and relatively low potential a second circuit whose function is to cause and maintain a self-conductivity and self-discharge of the primary circuit and to furnish additional energy for ionization and for the increase of positive heat generation. For this secondary circuit a current of high potential and high frequency, but low amperage is suitable. The primary circuit as well as the secondary circuit can be connected on one hand to the metal wire point and on the other hand to the surface to be sprayed, both of which function as electrodes. However, the secondary circuit can also be connected at both poles with other electrodes in the space between the wire point and the surface to be sprayed. Depending upon the desired output or quality of the spray-coating to be produced, only the secondary circuit can be employed.

In addition to the two circuits mentioned above, it has proven suitable in some cases to provide sparks from a spark plug or similar luminous electrical discharges in the stream of gases or in the metal spray, which furnish additional energy on their part.

In addition to the electrons which, as indicated above, are liberated by the thermo-chemical reaction, additional free electrons are generated by the discharge of the above-mentioned electrical circuits. These additional free electrons are generated through impact ionization. Through the electron bombardment of this impact ionization the protruding wire point, the surface to be spray-coated and the space therebetween are subjected to a very strong heating action over and above that furnished by the chemical combustion reaction of the gases. Only the sum of the heat energies furnished by the chemical and the electrical actions makes it possible to melt metal wires of all types, even those having a high melting point, and at the same time to obtain a high output capacity as well as a high atomizing effect and an intimate bonding of the metal particles with each other and with the surface to be coated.

The means for progressively advancing the metal wire is suitably coupled to the regulating means for the electric circuits so that they mutually adjust themselves automatically to the prevailing conditions. Thus, the driving motor of the wire advancing mechanism is regulated by a special electric regulating mechanism which is actuated by the circuits which create the electric fields. This mechanism controls the advance of the metal wire depending upon the amount of current flowing in the electric field circuits.

The ionization of the gases can be additionally increased by admixing ionizing materials with the combustion gases, or by jacketing the metal wire with a material having an ionizing effect upon the gases, or by providing the ionizing material in the core of the metal wire. The ionizing material consists, for example, of alloys of alkali metals or alkali earth metals. However, certain elements may also be attached to the spray gun itself where they are caused to glow and emit electrons. For example, the point and the jacket of the jet nozzle through which the combustion gases are expelled are made of these ionizing elements, or these elements are coated with ionizing compounds which ionize when they are resistance heated to red heat, such as barium-oxide or thorium oxide.

Another method of further ionizing the gases emerging from the spray gun consists of subjecting them to ionizing light, such as ultraviolet rays.

To summarize then, the method of spray-coating with metals in accordance with the invention consists of causing the chemical, electro-chemical and electric factors listed below to act together so that the respective amounts of energy created supplement each other, in order to effect the melting and atomizing of the spray material in the

most efficient manner, and to cause the sprayed particles to be intimately bonded with each other as well as with the surface to be coated.

1. The exothermic reaction of the burning gases with its positive heat generation.

2. The ionization of the gases and the liberation of electrons by the chemical combustion process.

3. The thermo-electric effect of the glowing wire point and the additional emission of electrons thus created.

4. The impact ionization of the electric discharges of the superimposed circuits and the liberation of electrons caused by them through chain reaction.

5. The arrangement of electric ignition devices or electric arcs in the stream of gases or in the spray, such as ignition sparks from a spark plug or an electric arc between similar electrodes.

6. Additional ionization through:

a. Admixture of ionizing materials to the combustion gases.

b. The use of a jacket wire or an internal core within the wire, where the jacket or core material contains ionizing materials.

c. Heating of special elements to red heat, which elements are disposed within the spray gun for additional ionization at red heat.

d. Coating of such elements with ionizing materials.

e. Subjecting the gas stream emerging from the spray gun to the rays of ionizing light for additional ionization.

7. The electric discharge of the primary circuit at high amperage in the space between the point of the metal wire and the surface to be coated, which space is ionized by the above means and charged with free electrons.

In order to further facilitate the intimate bonding of the metal particles with each other and with the surface to be coated, and in order to impart special properties to the spray coating it has been found to be advantageous to admix alloy-forming substances with the metal spray by providing the metal wire, for instance, with a jacket or an internal core which contains such substances, for example, as metal carbonyls.

It has also been found that the intimate bonding of the metal particles with each other and with the surface to be coated is considerably improved by adding oxygen-removing substances. Such substances, for example ferrotitanium-aluminum mixtures, are added to the jacket or the internal core of the metal wire.

The attached drawing represents a preferred embodiment of the apparatus in accordance with the invention. Fig. 1 is a longitudinal section through the spray gun and shows the necessary auxiliary attachments as well as the details of the spray gun as a whole.

Fig. 2 is a schematic representation of the manner in which a second electric field is superimposed upon the metal spray.

Fig. 3 is a schematic diagram of a further variation of the present invention which shows how the secondary circuit is connected to electrodes other than the work piece and the spray gun. This figure shows in addition the arrangement of an ultraviolet light source, and the circuit connections for the automatic control means for the wire advancing mechanism, which are in turn connected and controlled by the source which creates the electric field.

As an essential part of the apparatus the spray gun itself will be described first. It consists of a bell-shaped jacket 1 in the interior of which the pear-shaped combustion chamber 2 is mounted. The combustion chamber 2 is made of steel and is mounted in jacket 1 so that between them three hollow spaces *w*, *k* and *s* are formed. The hollow space *w* is formed by a ring-shaped groove in spray nozzle 2*c* which forms a part of the combustion chamber 2. Space *w* is connected with space *k* through the spaces between the teeth of the toothed inner edge 2*d* of the ring-shaped groove. However, the two hollow spaces *k* and *s* are separated from each other by a ring-shaped solid

supporting rib 2*f* located on the outside of the combustion chamber. Immediately in front of the supporting rib 2*f* axial apertures 2*g* are provided in the wall of the combustion chamber which are evenly spaced about the circumference thereof and connect the space *k* with the combustion space T. Hollow space *s* and combustion space T are connected with one another by tangentially drilled apertures 2*b* in the shell of the combustion chamber; apertures 2*b* are also evenly spaced about the circumference of the chamber. Jacket 1 also comprises two rearwardly directed sockets 1*a* and 1*b*. Socket 1*a* allows spark plug 2 to be inserted therethrough and screwed into a threaded aperture in the wall of combustion chamber 2, as shown. Plug 14 renders the socket 1*a* gas tight and is made of insulating material. Contact screw 15 protrudes through plug 14 and serves to hold a spark plug lead-in wire C. Screw 15 is connected to the spark plug Z through spiral spring 13. Socket 1*b*, however, serves as a connecting socket for the fuel feed line B and comprises a bore *e* which leads into hollow space *w*. The fuel line 12 is connected to socket 1*b* by connecting stud 11. Cover 3, fastened to jacket 1 by bolts 8, forms an airtight closure of the mouth of the bell-shaped jacket. The cover 3 comprises a socket 3*c* with a conical seat for a guide tube 5, and an outside thread for flanged nut 4, as well as a trumpet shaped funnel 3*b* with a spiral internal guide rib 3*a*. Funnel 3*b* protrudes forwardly into hollow space *s* and forms an additional hollow space *f*. Guide tube 5, which serves to guide the wire electrode D therethrough is introduced from the rear through socket 3*c* in jacket cover 3, passes through the cylindrical portion 2*e* of combustion chamber 2, extends forwardly through space T, and its point protrudes into the opening at the exact center of nozzle 2*a*. The guide tube 5, which is held by flanged nut 4 engaging flange 5*b*, and is pressed against the conical seat of guide socket 3*c*, comprises also radially disposed outlet apertures 5*a* which are located approximately equidistant from the front and rear ends of the guide tube. These outlet apertures connect hollow space *m* with hollow space *f*. Guide tube 5 further comprises a smaller longitudinally arranged tube 6, whereby a hollow space *n* is formed. Central tube 7 is introduced from the rear through tube 6 and extends to the forward tip of guide tube 5 where it seals the forward open end of guide tube 5 and forms an extension thereof, so that the wire electrode D, when introduced and pushed through central tube 7, passes through the longitudinal axis of the spray gun. At the rear of guide tube 5 there is a lateral bore 6*a* with a conical fitting, which bore passes through guide tube 5 and tube 6 and leads into hollow space *n*. A compressed air line A is connected to this bore by suitable means so as to render the connection airtight.

Behind the spray gun is the wire electrode advancing mechanism M which is attached to the spray gun rigidly or flexibly, as desired. This mechanism is here only schematically shown, and the arrow merely indicates the direction of rotation of the lower roller.

The mechanism Q which furnishes the additional electrical energy for bonding the particles with each other and with the surface to be coated is connected to an alternating current line N, and is shown here schematically as a direct current source. Its negative terminal P is connected to connection 10 of compressed air line A in such a manner that the point D*i* of wire electrode D acts as a cathode. The positive terminal R is connected to the schematically represented work piece Y, which in the present case is a conductive substance. The spray X of metallic, electricity-bearing particles emanating from metal point D*i* and the electric field E are superimposed upon each other. The metal coating deposited upon the work piece Y is designated by L.

In operation, the spray gun functions as follows: Compressed air enters through fitting 10, passes through annular space *n* longitudinally toward the tip of guide tube 5, thence through annular space *m* rearwardly to exhaust

apertures 5*a*, thence into hollow spaces *f* and *s*, through tangential apertures 2*b* into combustion chamber 3 and through nozzle 2*a* to the outside, where it has an atomizing effect on hot wire D*i* and becomes the carrier stream for the melted metal particles of wire D. The energy for melting wire D*i* is derived from a burning combustible gas which is admitted into the spray gun through fitting 12, and passes through channel *e* into the annular space behind nozzle socket 2*c*, thence into hollow space *k*, and through longitudinal apertures 2*g* into combustion chamber T, where the gas is ignited by spark plug Z. The energy necessary to bond the metal particles deposited on work piece Y with each other as well as with the surface of the work piece is supplemented by the field created between the spray gun and the work piece. As the point D*i* of metal wire D is atomized, the wire advancing mechanism M will automatically advance wire D through central tube 7 so as to maintain a constant fresh supply of metal.

In Fig. 2 the primary circuit of high frequency, low potential and high current intensity creates the primary field between the nozzle and the work piece, each of which act as an electrode. Superimposed upon this primary field is a secondary field which is generated by a high potential, high frequency, but low current circuit. The function of the secondary field is to cause and maintain the self-conductivity and self-discharge of the primary field, as well as to furnish additional heat energy.

In Fig. 3, the secondary field is created by two separate electrodes, while the primary field has as its electrodes the spray gun and the work piece. Depending upon the desired output or the quality of the spray-coating either both or only one of the fields can thus be employed to furnish the additional heat energy. The rays of the ultraviolet light source further ionize the metal spray emerging from the nozzle of the spray gun and thus increase the effectiveness of the superimposed electric fields. The wire advancing mechanism is connected to the mechanism which creates the electric fields and automatically advances the wire at a rate depending upon the amount of metal wire being atomized and upon the field intensity.

It is to be understood that I do not wish to be bound by the particular structure of the spray gun disclosed herein. Any other type of spray gun functioning in substantially the same manner is equally suitable to carry out my invention.

Having now described my invention, what I claim is:

1. The method of spray-coating a surface with metal, which comprises igniting a gaseous fuel in a combustion chamber, atomizing a heated metal wire with said gaseous fuel by passing said fuel through a nozzle having said metal wire located therein to form a metal spray directed toward the surface to be coated, generating a primary electric field extending from said metal wire to said surface, and superimposing a secondary electric field upon said primary field, said secondary field being substantially parallel to said primary field but extending over a distance less than the straight-line distance between said metal wire and said surface, said primary electric field being generated by a circuit of high frequency, high current and low potential, and said secondary electric field being generated by a circuit of high frequency, low current and high potential.

2. The method of spray-coating a surface with metal, which comprises igniting a gaseous fuel in a combustion chamber, atomizing a heated metal wire with said gaseous fuel by passing said fuel through a nozzle which has said metal wire located therein, discharging at least one electric field between said nozzle and the surface to be coated, and ionizing said gaseous fuel by admixing an ionizing substance therewith, said ionizing substance being the oxide of a metal selected from the group consisting of barium and thorium.

3. A method of spray-coating a surface with metal, which comprises igniting a gaseous fuel in a combustion chamber, atomizing a heated metal wire with said gaseous fuel by passing the fuel under pressure through a nozzle which has said metal wire located therein, discharging at least one electric field between said nozzle and the surface to be coated, and ionizing the metal spray emerging from said nozzle by simultaneously atomizing metal carbonyls with said wire.

References Cited in the file of this patent

UNITED STATES PATENTS

1,139,291	Jenkins	May 11, 1915
1,615,995	Muller	Feb. 1, 1927
2,231,247	Bleakley	Feb. 11, 1941

FOREIGN PATENTS

28,001	Great Britain	of 1912
28,132	Great Britain	of 1913
196,695	Great Britain	of 1923
553,099	Great Britain	of 1943