**PCT** WORLD INTELLECTUAL PROPERTY ORGANIZATION
International Bureau

INTERNATIONAL APPLICATION PUBLISHED UNDER THE PATENT COOPERATION TREATY (PCT)

| (51) International Patent Classification 6 : A61B 17/70 | A1 | (11) International Publication Number: WO 95/16403 |
|---|---|---|
| | | (43) International Publication Date: 22 June 1995 (22.06.95) |

(21) International Application Number: PCT/US94/14160

(22) International Filing Date: 15 December 1994 (15.12.94)

(30) Priority Data:
08/169,998 17 December 1993 (17.12.93) US

(71)(72) Applicants and Inventors: HEGGENESS, Michael, H. [US/US]; 3301 Drummond, Houston, TX 77025 (US). DOHERTY, Brian, J. [US/US]; 101 Tallwood Court, Atherton, CA 94027 (US).

(74) Agent: PRAVEL, James, W.; Suite 200, 2711 Jefferson Davis Highway, Arlington, VA 22206 (US).

(81) Designated States: AU, CA, JP, European patent (AT, BE, CH, DE, DK, ES, FR, GB, GR, IE, IT, LU, MC, NL, PT, SE).

**Published**
*With international search report.*

(54) Title: DEVICES AND METHODS FOR POSTERIOR SPINAL FIXATION

(57) Abstract

This invention is devices and methods for modular occipital/spinal fixation, general bone fixation and skull fracture repair. An orthopedic plate (100) designed for unicortical engagement of the occiput exhibits greater stability and safety over conventional methods, and a locking screw/plate assembly (20) for posterior facet screw fixation of cervical and thoracic vertebrae. A locking screw (30) and locking tool (40) may be used with the orthopedic plate and spinal fixation devices as well as other orthopedic devices.

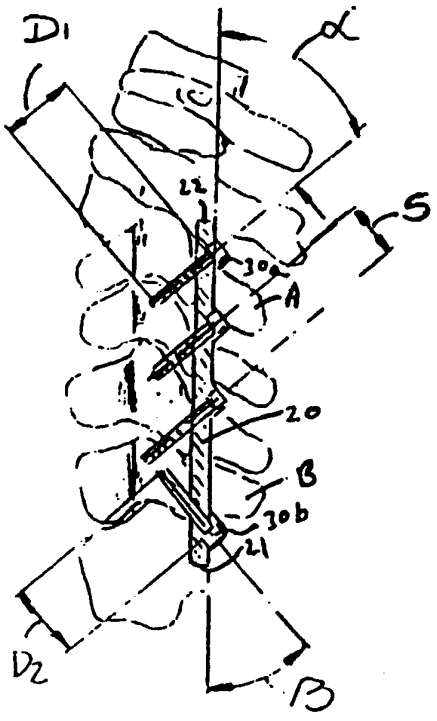

*FOR THE PURPOSES OF INFORMATION ONLY*

Codes used to identify States party to the PCT on the front pages of pamphlets publishing international applications under the PCT.

| | | | | | |
|---|---|---|---|---|---|
| **AT** | Austria | **GB** | United Kingdom | **MR** | Mauritania |
| **AU** | Australia | **GE** | Georgia | **MW** | Malawi |
| **BB** | Barbados | **GN** | Guinea | **NE** | Niger |
| **BE** | Belgium | **GR** | Greece | **NL** | Netherlands |
| **BF** | Burkina Faso | **HU** | Hungary | **NO** | Norway |
| **BG** | Bulgaria | **IE** | Ireland | **NZ** | New Zealand |
| **BJ** | Benin | **IT** | Italy | **PL** | Poland |
| **BR** | Brazil | **JP** | Japan | **PT** | Portugal |
| **BY** | Belarus | **KE** | Kenya | **RO** | Romania |
| **CA** | Canada | **KG** | Kyrgystan | **RU** | Russian Federation |
| **CF** | Central African Republic | **KP** | Democratic People's Republic of Korea | **SD** | Sudan |
| **CG** | Congo | | | **SE** | Sweden |
| **CH** | Switzerland | **KR** | Republic of Korea | **SI** | Slovenia |
| **CI** | Côte d'Ivoire | **KZ** | Kazakhstan | **SK** | Slovakia |
| **CM** | Cameroon | **LI** | Liechtenstein | **SN** | Senegal |
| **CN** | China | **LK** | Sri Lanka | **TD** | Chad |
| **CS** | Czechoslovakia | **LU** | Luxembourg | **TG** | Togo |
| **CZ** | Czech Republic | **LV** | Latvia | **TJ** | Tajikistan |
| **DE** | Germany | **MC** | Monaco | **TT** | Trinidad and Tobago |
| **DK** | Denmark | **MD** | Republic of Moldova | **UA** | Ukraine |
| **ES** | Spain | **MG** | Madagascar | **US** | United States of America |
| **FI** | Finland | **ML** | Mali | **UZ** | Uzbekistan |
| **FR** | France | **MN** | Mongolia | **VN** | Viet Nam |
| **GA** | Gabon | | | | |

**APPLICATION FOR PATENT**

TITLE: DEVICES AND METHODS FOR POSTERIOR SPINAL FIXATION

**BACKGROUND OF INVENTION:**

1. FIELD OF INVENTION:

The present invention is related to novel devices and methods for spinal fixation, included in one aspect posterior spinal fixation, particularly posterior cervical fixation, utilizing a plate and locking screw system, designed for improved stability and safety over devices presently in use. The invention is also directed to novel devices and methods for occipital/spinal fixation, particularly fixation of the occiput to the posterior side of the cervical vertebrae, utilizing both the inventive device and method of posterior spinal fixation as well as other spinal fixation systems. The invention is also related to the use of orthopedic plates for stabilization of fractured bones, including skull bone following a surgical craniotomy or accidental fracture. Finally, the present invention is related to a novel locking screw system for use in orthopedic plate/screw fixation devices.

2. DESCRIPTION OF RELATED ART:

Occipital/cervical Fixation:

Occipital/cervical fixation, although not a commonly performed procedure, is indicated for instability of the craniocervical junction resulting from trauma, degenerative disease, inflammatory arthritis, or malignancy.

Several techniques have been tried in recent years to improve the ease and reliability of occipital/cervical fixation, many of which are described by White and Panjabi in Clinical Biomechanics of the Spine, 2nd Ed. (1990). One common technique for posterior occipital/cervical fixation involves the use of wires. In particular, the occiput is fused to the upper cervical spine by a set of bilateral wires which are threaded through holes drilled into the C1 and C2 vertebrae and up through holes drilled into the occiput. Alternatively, occipital/cervical fixation may be accomplished by the use of Luque rods with intracranial and sublaminar wiring. While stability is good, these techniques are dangerous in that there is a serious risk of cerebrospinal fluid leak and/or bleeding from the sagittal sinus due to the placement of the holes in

the occiput.

Another method of posterior occipital/cervical fixation is the use of a single plate molded according to the anatomy of the head and the cervical spine. At one end, the plate is screwed into the occiput, and at its other end the plate is screwed or wired to the vertebrae. One such plate is a Y-plate, as discussed by Grob, D. et al., "Posterior Occipital Cervical Fusion," 16 Spine S17-S24, (1991). Here, the "arms" of the plate are attached to the C1 and C2 vertebrae by AO transarticular screws while the proximal end of the plate is attached to the occiput by screws. The C1-C2 fusion is accomplished by use of a Magerl technique wherein two non-locking screws connect the two vertebrae, at an upward 30° angle, through the top of the C2 lamina, across the C1-C2 articulation, and into the lateral mass of C1.

Alternatively, bilateral fixation plates can be used for subaxial (i.e. vertebrae below C1) fusion, comprising the use of two AO reconstruction plates. According to Grob and associates [(16 Spine S17 (1991)], the plates are fixed to the occiput by screws through the skull, and then they are fixed distally to the lateral masses of the subaxial vertebrae. To attach the plates to the vertebrae, the drilling of the holes is directed cranially and parallel to the joint surface and 20-30° laterally to avoid damage to the vertebral artery and nerve root.

The use of internal fixation to the occiput is made challenging by the extreme variability in the thickness of the skull itself and the rather major penalties which can complicate these procedures. The current procedures generally known in the industry for occipital/spinal fixation involve insertion of screws and/or intracranial wires through the very thin bone of the cerebellar fossa. Resulting complications of occipital fixation thus include the creation of dural leaks, direct trauma to the brain, penetration of the large intracranial venous sinuses, and iatrogenic meningitis. Other complications associated with any internal fixation device, such as hardware loosening, hardware pull out, and hardware fracture, for example, can also occur.

Consequently, it is desirable to have a method of

occipital/spinal fixation wherein the occipital fixation device is placed in an optimal location on the skull, ideally the thickest bone, for increased safety as well as optimal stability. Such a method is best accomplished by a modular system whereby the surgeon is able to mount a plate to a desired location on the occiput, and then attach a separate spinal fixation device, such as rod or plate, for example, posteriorly to the desired vertebrae. The superior end of the spinal fixation device can then be adapted to attach to the plate, or a third device can be used to connect the plate to the spinal fixation device.

Posterior Spinal Fixation:

The use of segmental screw fixation has revolutionized the practice of thoracic and lumbar spinal surgery. Implants with screws which lock rigidly to the plate are extremely stable and allow the surgeon considerable freedom in performing very aggressive destabilizing surgery. This is often to the patient's advantage in cases of extreme spinal instability, fracture, or tumor. Examples of such implants include the Kaneda device for anterior thoracic and lumbar use, for example, and the Cotrel-Dubosset and Texas Scottish Rite pedicle screw configuration methods for the posterior thoracic and lumbar spine.

A current method of posterior cervical fixation involves C1-C2 sublaminar posterior wiring used in combination with Luque rods. While this method works fairly well to immobilize the spine, there is an increased risk of spinal cord injury due to the necessity of passing multiple sublaminar wires through the cervical spinal canal. Other posterior spinal fixation methods include spinous process wires and facet wires typically used in the lower cervical spine, Halifax clamps which clamp together the lamina of the C1 and C2 vertebrae, and hook plates placed underneath the lamina of the lower vertebrae involved and fixed to the articular process of the upper vertebrae by a screw (as described by Jeanneret, B. et al., "Posterior Stabilization of the Cervical spine with Hook Plates," 16 Spine S56-S63 (1991)).

Another method of posterior spinal fixation involves the use of screws and/or plates. Anderson and associates in their

article "Posterior Cervical Arthrodesis with AO Reconstruction Plates and Bone Graft" (16 Spine S72-S79 (1991)) discuss fixation of the cervical spine by the use of these non-locking, lateral mass plates which are attached to the vertebrae by screws inserted into the vertebrae at a 30-40° cranial (i.e. upward) direction. Each screw attaches one vertebra, such that the vertebrae are connected to each other only by means of the plate. The plates are malleable and have different hole spacings to accommodate variations in patient size and anatomic levels to be fused.

A similar technique for posterior cervical fixation using lateral mass screws and plates was originally described by Roy-Camille, et al. (Recent Advances in Orthopaedics, B. McKibbin, Ed., p.51-87 (Churchill-Livingston, Edinburgh 1979) and is explained in greater detail by Nazarian and Louis (16 Spine S64-71 (1991)). This technique also involves placing a screw into each individual lateral mass and then attaching or connecting the vertebra together by means of a non-locking plate. The direction of screw placement is different from the Magerl method, discussed below; however, the purpose of both methods is to obtain bicortical purchase through the lateral mass of a single vertebra without penetration of the facet joint.

All of the foregoing methods are examples of segmental fixation; however, they do not rigidly attach the screws to the plate. All of these implants, for example, may have problems when used on a grossly unstable spine, such as that created by a complete cervical vertebrectomy. The non-locking lateral mass plates, such as the AO recon plate, also require an extraordinary degree of technical expertise by the surgeon. Acquiring bicortical purchase with these lateral mass screws requires that the screw be placed "freehandedly" to within millimeters of the vertebral artery and the exiting cervical nerve root. Injury to either of these structures may have devastating consequences for the patient.

The Magerl method, as discussed, for example, by Montesano, et al. ["Biomechanics of Cervical Spine Internal Fixation" (16 Spine S10-S16 (1991)], involves the attachment of the anatomically unique C1 and C2 vertebrae by two non-locking

screws. The screws are engaged at an upward angle by insertion from the tip of the lamina of C2, across the C1-C2 articulation, and into the lateral mass of C1. The screw length is about 18-20 mm, and the angle of purchase is 30° in an upward (i.e. cranial) direction. This method of fixation, however, is a relatively dangerous procedure in that there is a great risk of damage to the exiting cervical nerve root and the vertebral artery, similar to the risks associated with the use of non-locking lateral mass plates discussed above.

Another means of obtaining posterior internal fixation of the spine is the use of screws to transfix the facet joints. This method, as applied to the lumbar spine, has been described by M. Heggeness and S. Esses, 16 Spine S266-S269 (1990). This method has also been applied in the anatomically unique (and complex) C1-C2 level of the spine, as described by Montesano, et al., 16 Spine S10-S16 (1991).

In light of the problems associated with existing devices and methods for posterior spinal fixation, in particular posterior cervical fixation, it is desirable to have a device and method that affords adequate immobilization of the spine, including grossly unstable spine, without posing a significant threat to the vertebral artery or cervical nerve root.

Plate/Locking Screw Systems for Spinal Fixation:

Presently, there are very few locking screw devices on the market for use in spinal fixation. Perhaps the most commonly used locking screw is that used in the AO/Synthes Cervical Locking Plate (CSLP). This screw consists of a cylindrical screw head, drilled coaxially with the long axis of the screw shaft. That is, there is a smaller set screw in the head. The walls of the head are also slotted, so placement of the set screw expands the walls of the head, locking it into the plate. Aspects of this screw include minimal risk of screw pull-out. This method, however, has the disadvantage that it is easy to accidentally misplace or drop the smaller set screw into the surgical wound during use.

Another locking screw system is Danek's Orion plate, which is also a "two-screw" system. In this system, one larger screw is placed into the hole of the locking plate and then positioned into the bone like other screw/plate devices.

However, a second screw with a much larger head is inserted into a smaller hole adjacent to the first hole containing the larger screw. Once the larger screw is in the proper position in the bone, the smaller screw is inserted into the plate as described above and torqued down until a portion of the head of the smaller screw covers a portion of the head of the larger screw, thus preventing the larger screw from backing out. This method also requires the use of an additional small "locking screw" which may be dropped or misplaced. The use of this type of locking screw also adds bulk to the implant and may impinge the visceral structures of the patient.

The AMS Company manufactures another type of locking screw/plate system utilizing a single screw. The screw comprises two sets of threads on the longitudinal piercing portion of the screw. The set of threads immediately subjacent to the screw head are designed to engage into a threaded hole contained within the locking plate. The lower set of threads function to engage the bone. Thus in this system, when the screw is torqued to engage the lower set of threads into the bones, the screw is simultaneously "locked" into the plate via threadable engagement of the upper threads of the screw with the hole in the locking plate. While this system is advantageous in that only one screw is required, the disadvantage of this system is that the screw placement function and the locking function are combined, thereby making it difficult for the surgeon to "feel" where he or she may be in the bone being penetrated. The quality of bone/screw purchase is thus more difficult for the surgeon to assess.

It is therefore desirable to have a locking plate/screw system requiring only one locking screw, but where the locking function and the bone placement function are separate for safer and easier bone purchase. It is also desirable to minimize the number of components in the locking mechanism.

Summary of the Invention:

The present invention, in certain embodiments, is directed to a novel modular method for posterior occipital/spinal fixation, comprising (a) attaching at least one plate to an optimal position on an occiput, wherein the plate comprises a posterior surface and an anterior surface, (b) attaching at

least one longitudinal spinal stabilizing device to the posterior surface of at least two spinal vertebrae, including an inferior-most vertebra, and wherein the longitudinal spinal stabilizing device has a superior end and an inferior end, and (c) connecting the superior end of the longitudinal spinal stabilizing device to the plate. The modular design of the present invention allows for independent placement of the plate or plates and the spinal stabilizing device or devices for optimal safety and stability. In particular, it is easier to mount the plate to a more desired location on the occiput, usually the thickest bone of the occiput.

The present invention also relates to a novel fixation device for use in posterior occipital/spinal fixation, wherein the fixation device comprises a plate having a posterior surface and an anterior surface, a connecting means for connecting the plate to the occiput, and a mounting means for mounting the plate to a longitudinal spinal stabilizing device that is fixedly attached to the posterior surfaces at least two vertebrae. In the preferred embodiment of the present invention, the plate has at least two angled bores positioned bilaterally to one another, and the connecting means is preferably a screw engaged in each of the bores for unicortical, angled engagement of the plate to the occiput. The mounting means of the plate is preferably an elevated platform which is adapted for attachment to a longitudinal spinal stabilizing device, such as cervical or thoracic rods, plates, or wires, for example. In particular, the platform preferably contains at least one bore for engagement of the longitudinal spinal stabilizing device by a second connecting means such as a screw or wires, for example.

Advantages of certain embodiments of the present inventive method of occipital/spinal fixation over other existing methods include:

(1) a modular design which allows for independent placement of the plate and the spinal stabilizing device for optimal safety and stability. This is particularly important since the safe insertion of the cervical spine lateral mass screws, for example, effectively dictates the position and orientation of other occipital/cervical plates beyond any substantial control

of the surgeon. While a bendable occipital/cervical plate improves somewhat the ability of the surgeon to position the plate on the occiput, the present invention, with its modular design, gives the surgeon much greater flexibility;

(2) improved stability of the occipital fixation device to the occiput by positioning the screws in a converging or diverging direction to minimize or prevent screw pull-out; and

(3) engagement of only one cortex of the occiput (i.e. the posterior cortex) while maintaining good stability, thus improving safety by greatly decreasing the risk of penetrating the brain or intracranial venous sinuses, or causing cerebrospinal fluid leak.

The present invention, in certain embodiments, is also directed to a novel posterior spinal stabilizing device and method which may also be adapted for use with the present inventive occipital/spinal fixation method. Specifically, the inventive posterior spinal stabilizing device comprises (a) a longitudinal spinal stabilizing member further comprising a superior end, an inferior end, an anterior surface, a posterior surface, at least one downwardly-angled bore contained therethrough, and at least one upwardly-angled bore contained therethrough, wherein said at least one upwardly-angled bore is located on the inferior end of said member; (b) a first screw engaged within each of one or more said downwardly-angled bore for engagement of two vertebrae; and (c) a second screw engaged within each of one or more said upwardly-angled bore for engagement of an inferior-most vertebra. In particular, the present inventive method of posterior spinal stabilization allows for tri-cortical and bi-cortical purchase of the bony structures of the vertebrae, particularly the cervical vertebrae, without significant threat to the vertebral artery or cervical nerve root. Moreover, the angle of screw placement, as defined by the inventive posterior spinal stabilizing member, is the optimal angle for screw engagement of the cortices necessary to achieve these results.

The present invention is also related to a novel method for stabilizing a skull bone fracture or a skull fragment resulting from a craniotomy, for example. In both cases, stabilization of the skull bone is achieved by aligning the inventive plate

(or a minor variation thereof) over the line of fracture or junction and then inserting a screw through the angled bores and into the posterior cortex of the skull for unicortical engagement. The present invention is a safer and better method of skull repair as compared to other methods in which either a metal plate, for example, is used to cover the opening in the skull resulting from the craniotomy, or the previously removed skull fragment is replaced without the aid of any stabilizing device to stabilize and prevent the fragment from subsiding into the brain.

The inventive plate can also be used as a general bone fixation device similar to the inventive method of posterior spinal stabilization. For example, the inventive plate may be first attached to a portion of the skull, and then one end of a separate longitudinal stabilizing device, such as a rod or plate, may be mounted to the inventive plate. The other end of the longitudinal stabilizing device is then mounted to another bone of the skull, such as the mandible. Similarly, the inventive plate can be mounted to other bone surfaces in the body to stabilize the bone or a fracture.

Finally, the present invention is directed to a novel locking screw which can be used in conjunction with any orthopedic device that typically requires a locking screw. In particular, the present inventive locking screw system comprises the use of a single screw comprising a head and a longitudinal cylindrical piercing member integral with the head, wherein the head further comprises (a) an exterior surface defining the circumference of the head, (b) at least one depression positioned on the exterior surface of the screw head for crimping engagement within the orthopedic device, and (c) a top portion integral with the exterior surface of the screw head, wherein the top portion has a socket for insertion of a tool for engaging the screw through or into said orthopedic device.

The inventive locking screw is advantageous in that only a single screw is required, in addition to the plate, to achieve locking as opposed to other systems wherein an additional piece, such as another screw, is required to lock the screw into the plate and bone. Further, when the inventive screw is

used to also penetrate the bone, the function of inserting the screw into the bone and the function of locking the screw into the plate are separate, thereby enabling the surgeon to better feel the location of the screw in the bone for safer and more effective screw placement.

Brief Description of the Figures:

The objects, advantages, and features of the invention will become more apparent by reference to the drawings which are appended hereto, wherein like numerals indicate like parts and wherein an illustrated embodiment of the invention is shown, in which:

Fig. 1 is a side view of the head and neck showing attachment of the present inventive posterior longitudinal stabilizing device to the cervical vertebrae.

Fig. 2 is a posterior view of the neck region taken along lines 2--2 of Fig. 1 showing bilateral attachment of two posterior longitudinal stabilizing devices of the present invention.

Fig. 3 is an enlarged cross-sectional side view of the cervical spinal region showing attachment of the inventive posterior longitudinal spinal stabilizing device to four cervical vertebrae using three downwardly-angled screws penetrating the posterior cortices of lateral masses of the vertebrae and one upwardly-angle screw penetrating the posterior cortex of the inferior-most vertebra.

Fig. 4 is an enlarged view of Fig. 3, showing tricortical purchase of the vertebrae with the present inventive posterior longitudinal spinal stabilizing device and the inventive locking screw.

Fig. 5 is a cross-sectional side view of the present inventive posterior longitudinal spinal stabilizing device showing the downwardly- and upwardly-angled bores.

Fig. 6 is a posterior view of the present inventive longitudinal spinal stabilizing device.

Fig. 7 is a perspective view of the present inventive plate.

Fig. 8 is a posterior view illustrating the attachment of two of the inventive longitudinal spinal stabilizing devices to the posterior surface of cervical vertebra and to two of the inventive plates positioned bilaterally to one another along

the superior nuchal line of the occiput.

Fig. 9 is a perspective view of the skull and a skull fragment and illustrates the present inventive method of unicortical skull fragment or fracture stabilization using an alternate embodiment of the inventive plate.

Fig. 9a is a cross-sectional side view of the skull illustrating fixation of the mandible to the skull using one inventive plate and a longitudinal fixation device.

Fig. 9b is a cross-sectional side view of the skull illustrating fixation of the mandible to the skull using two inventive plates and a longitudinal fixation device.

Fig. 10 is a perspective view of the alternate embodiment of the inventive plate useful in unicortical skull fragment stabilization.

Fig. 11 is a cross-sectional side view of both embodiments of the present inventive plate taken along line 11--11 of Figure 10, showing angled unicortical engagement of the occiput using the inventive locking screw.

Fig. 12 is a cross-sectional side view of the inventive posterior spinal stabilizing device containing the preferred embodiment of the inventive locking screw and crimping tool for crimping the lip of the device into the head of the screw.

Fig. 13 is a posterior view of the inventive locking screw illustrated in Fig. 12.

Fig. 14 is a cross-sectional side view of an alternate inventive method of posterior spinal fixation using screws and a spinal fixation rod.

Fig. 15 is a perspective view of a third embodiment of the inventive method of occipital/spinal fixation illustrating attachment of a single rod to a single plate.

Fig. 16 is a cross-sectional side view of the vertebrae and of the inventive drill guide aligned along the posterior surface of the vertebrae.

Fig. 17 is a perspective view of the inventive drill guide for drilling holes into the vertebrae according to the present inventive method.

DETAILED DESCRIPTION OF THE PREFERRED EMBODIMENTS:

Posterior Spinal Fixation:

The present invention, in certain embodiments, is related

to a novel device and method for posterior spinal fixation using a novel plate and locking screw design. In particular, the present method is directed to novel facet screw fixation of at least two vertebrae, preferably utilizing a longitudinal spinal stabilizing device and a locking screw. In the preferred embodiment of the present invention, the device is attached to at least two adjacent vertebrae in the C-2 through C-7 cervical spinal region. However, the inventive device may also be used for stabilization of at least two adjacent vertebrae in the upper thoracic region of the spine.

The present invention comprises attaching a longitudinal spinal stabilizing member, with at least two fasteners, preferably screws, to the posterior cortices of the lateral masses of at least two vertebrae. Referring to Figures 5 and 6, the longitudinal spinal stabilizing member (20) comprises a superior end (22), an inferior end (21), an anterior surface (24), and a posterior surface (23). The inventive longitudinal stabilizing member further includes at least one, more preferably at least two, downwardly-angled bore (26a) and at least one upwardly-angled bore (26b). Preferably, a lip (25a and 25b) extends outward from each bore and functions, in part, to maintain the angle of the bore, and consequently the angle of the screw, as well as aid in the locking mechanism of a locking screw.

As shown in Figures 3 - 5, a first screw (30a) is inserted through a downwardly-angled bore (26a), and a second screw (30b) is inserted through the upwardly-angled bore (26b). The first screw is then inserted through the posterior cortex of the lateral mass of a first vertebra (1a), through the inferior articular surface of the first vertebra (1b), and finally through the superior articular surface of the second vertebra (1c) subjacent to the first vertebra. The space between the inferior articular surface of the first vertebra and the superior articular surface of the second vertebra is the facet joint (1d) between the two vertebrae. The second screw (30b) is inserted through the posterior cortex of a lateral mass of the inferior-most vertebra (B). Alternatively, the longitudinal spinal stabilizing member (20) may comprise a greater number of downwardly- and upwardly-angled bores than

are actually needed to stabilize the desired number of vertebrae. By providing a larger number of bores from which to choose, this latter embodiment allows for greater flexibility in attaching the member (20) to the vertebrae in order to accommodate variations in patient size. Consequently, the first and second screws will only be inserted into those bores which are aligned over the desired locations of penetration of the vertebrae to be stabilized.

The present invention thus allows for a total of three cortices of each vertebra to be engaged by each screw, provided more than two vertebrae are to be stabilized. However, only two cortices (1a and 1b) are engaged in the superior-most vertebra (A), and only two cortices (1a and 1c) are engaged in the inferior-most vertebra (B). A minimum of at least two adjacent vertebrae must be fixed in this embodiment. Thus, if only two adjacent vertebra are stabilized, the inferior-most vertebra would also serve as the second vertebra subjacent to the first vertebra. The preferred depth ($D_1$) of the bores created by the screws is dependant upon the anatomy of the patient, and therefore will vary from patient to patient. However, based on an extensive quantitative anatomical study performed on ten cadavers, the preferred depths ranged from about 8 mm to about 18 mm. In practice, however, bore depths outside this range may be necessary, depending on the size of the spine as well as the nature and extent of the injury, and therefore each patient must be evaluated individually.

As already discussed, only a total of two cortices are engaged in the inferior-most vertebra due to the insertion of an upwardly-angled screw (30b) into the posterior cortex of a lateral mass of the vertebra (1a). The reason for not employing bicortical, downwardly-angled fixation in the inferior-most vertebra is that such a scheme would cause a violation of the subjacent facet joint (1d). That is, the second screw would ultimately penetrate the superior articular surface of another vertebra that is not meant to be stabilized. Consequently, the second screw (30b) should be manufactured of sufficient length so as to not violate the anterior cortex of the lateral mass to ensure that the vertebral artery and cervical nerve root are not injured. As with the depth ($D_1$) of

the downwardly-angled bores, the depth ($D_2$) of the bore created by the second screw will vary from patient to patient depending upon the size of the spine and the nature and extent of injury, for example.

The combination of downwardly- and upwardly- angled screw placements employed in the present invention allows for tri-cortical and bi-cortical bony purchase through the spine, preferably the cervical spine, without significant threat to the vertebral artery or cervical nerve root. Based on the same anatomical study discussed above, a preferred range of angles ($\alpha$ and $\beta$) is from about 20 to about 60 degrees, more preferably from about 40 to about 50 degrees, and most preferably about 45 degrees. In addition, the most preferred length for the first screws based on this study is from about 10 mm to about 12 mm, and for the second screws (i.e. upwardly-angled screws), the preferred length is from about 5 mm to about 10 mm. These preferred angles and areas of placement on the posterior cortex of the lateral mass of the vertebrae were determined based upon the quantitative anatomic study of the lateral masses of the bones of the cervical spine discussed above. Table 1 is a tabulation of the measured lateral mass inferior angles and the AP (i.e. anterior/posterior) dimension of the vertebrae at each level.

Moreover, the use of a locking screw in the present invention is most preferred for maximum stability and minimal risk of screw pull-out. However, non-locking screws and other types of fasteners, including, but limited to, bolts, pins, and nails, may also be used. A preferred locking screw from a safety standpoint is a novel locking screw, as described herein. As discussed later, if the present inventive locking screw is employed, the lips (25a and 25b) of the longitudinal spinal stabilizing member (20) can also be crimped inward to lock the screw into the member (20). Other locking screws can also be used in the present invention. For example, the locking screw used in the AO/Synthes Cervical Spinal Locking Plate (CSLP) discussed herein could be used with the present invention without any modification to the inventive longitudinal spinal stabilizing device. With a slight modification to the invention, namely the addition of threads

to the angled bores of the inventive longitudinal spinal stabilizing member, the "double-threaded" locking screw manufactured by the AMS Company could also be employed. It is further contemplated that one of ordinary skill in the art who first has the benefit of this invention's teachings and suggestions could make the necessary modifications to the inventive longitudinal spinal stabilizing device to accommodate Danek's Orion locking screw system.

While the inventive posterior longitudinal stabilizing member may be of any desired length and thickness, it preferably should be as thin as possible to minimize contact with nerves and blood vessels underlying the skin covering the vertebrae. A preferred thickness (T) of the plate is from about 2.0 mm to about 4.0 mm, more preferably from about 1.5 mm to about 3.0 mm.

Figure 2 illustrates the most preferred embodiment of the present inventive method, namely the attachment of two longitudinal spinal stabilizing members (20) positioned bilaterally to one another along the posterior surfaces of the vertebrae, preferably the cervical vertebrae C-2 through C-7. Alternatively, two longitudinal spinal stabilizing members can be attached to the posterior surfaces of at least two adjacent thoracic vertebrae for optimal stabilization.

**TABLE 1**

Quantitative anatomy of the posterior cervical spine (taken from 10 human cadavers):

| Vertebral Level | Inferior Facet Angle | Degrees | AP Lateral Mass Dimensions | |
|---|---|---|---|---|
| C-3 | 47.6 | (4.0) | 9.5 | (1.5)* |
| C-4 | 39.8 | (5.2) | 9.9 | (2.5)* |
| C-5 | 34.4 | (2.9) | 9.0 | (1.3)* |
| C-6 | 24.7 | (1.3) | 8.9 | (2.0)* |
| C-7 | 20.2 | (2.5) | 7.3 | (1.3)* |
| Overall Mean | 33.4 | (10.5) | 8.9 | (1.9)* |

* **Mean (Standard Deviation)**

In an alternate embodiment of the present inventive method, posterior spinal stabilization may be achieved by eliminating the inventive longitudinal spinal stabilizing member (20). In

this embodiment, as shown in Figure 16, each of at least one, and preferably two, first bores are drilled at a downward angle, first through the posterior cortex of the lateral mass (1a), and then through the inferior articular surface of the first vertebra (1b). Next, at least one, and preferably two, second bores are drilled at a downward angle, each through the superior articular surface of the second vertebra subjacent (1c) to the first vertebra. Similarly, at least one, and preferably two, third bores are drilled at an upward angle, each through the posterior cortex of the lateral mass of the inferior-most vertebra (1a). The preferred depths of the bores are dependant upon the size of the spine and the nature and extent of the injury,and thus will vary from patient to patient. However, based upon the same anatomical study discussed herein for the inventive method for posterior spinal stabilization illustrated in Figures 3-6, the preferred combined depths for the first and second bores range from about 8 mm to about 18 mm, and the preferred depth for the third bore range from about 8 mm to about 18 mm.

To obtain the optimal bore angle and depth according to the present invention, a jig or drill guide (60), as shown in Figures 16 and 17, may be used. The inventive drill guide (60) has a superior wall (62), an inferior wall (61), a posterior wall (63), an anterior wall (71) and two side walls (70). Designed very similarly to the present inventive longitudinal spinal stabilizing member (20), the inventive drill guide (60) further comprises at least one bore (64) positioned at a downward angle through the posterior (63) and anterior (71) walls. Each bore (64) comprises an upper section (65) wide enough to accommodate a drill stop (74) and a lower section (66) that is of a sufficient diameter to allow insertion of the drill bit (75). The inventive drill guide (60) may be aligned along the posterior surfaces of the lateral masses of the desired vertebrae. Accurate vertical positioning of the drill guide may be better attained by utilizing a pointer (72a), which is located on a side wall (70) of the drill guide and which may be moved to the desired point of penetration of the drill bit (75) into the posterior cortex of the lateral mass of the vertebra (1a). Another pointer (72b) located on the

superior wall (62) of the drill guide may also be used to aid in proper horizontal alignment of the drill guide along the vertebrae. Once the drill guide is in the correct position, bores may be drilled into the vertebrae using a drill (73). Preferably, the drill (73) comprises a drill stop (74) which may be adjusted along the drill bit (75) to obtain the desired bore depth.

Alternatively, a longitudinal rod or plate (50), may be placed along the posterior surface of the vertebrae and between the bores, as shown in Figure 14. Once the rod (50) is in place, the screws are inserted into the downwardly- and upwardly-angled bores, as already described for the preferred embodiment of the invention. A separate device may be used to attach the screws to the spinal rod or plate (50), and consequently stabilize the vertebrae. Suitable devices for attaching the screws to the spinal rod or plate include, but are not limited to, a clamp and connecting rod assembly and a locking bolt.

While the present inventive longitudinal spinal stabilizing device is the most preferred, other longitudinal spinal stabilizing devices may also be used in practicing the inventive method for posterior spinal stabilization if desired. That is, the use of other spinal stabilizing devices are within the scope of the present invention, provided the screws are positioned in the vertebrae as described herein, namely in terms of the angle and location of penetration (i.e. penetration of the posterior cortex of the lateral masses and penetration of the superior and inferior articular surfaces of a first vertebra and a second subjacent vertebra, respectively).

The inventive posterior longitudinal spinal stabilizing member may be formed of materials typically employed by those of ordinary skill in the art in the manufacture of other orthopedic implants, including other internal spinal implants and devices. Examples of suitable materials include, but are not limited to, stainless steel, titanium, and vanadium, for example. Preferably, titanium or a titanium alloy may be used.

Locking Screw System:

The present invention is also directed to a novel locking

screw and locking device which may be used in orthopedic devices. Examples of suitable orthopedic devices include the present inventive posterior spinal stabilizing device as well as other devices used for anterior or posterior spinal fixation and for which a locking screw is desired. Furthermore, the present inventive locking screw may be used in the present inventive posterior occipital/spinal fixation device later described and claimed herein. For ease of explanation, the present inventive locking screw will be described with reference to the present inventive posterior longitudinal spinal stabilizing devices and method. However, it is recognized that the inventive locking screw may be used in essentially any orthopedic device and bony region in which a locking screw is typically employed.

Referring now to Figures 12-13, the inventive locking screw (30) comprises a head (31), preferably a head that is cylindrical in shape, and a threaded longitudinal cylindrical piercing member (33) integral with the head. The head (31) further includes an exterior surface (35), which defines the circumference of the head, and at least one depression (32) positioned on the exterior surface of the head for crimping engagement within a lip (25a or 25b). The lip (25a,b) is integral with the posterior surface of the longitudinal spinal stabilizing member (20) and extends from the bore in which the inventive screw (30) is to be inserted. The head (31) of the inventive screw further comprises a top portion (36) integral with the exterior surface of the head (35), and a socket (34) for insertion of a tool for engaging the locking screw through the longitudinal spinal fixation member (20) and into the vertebrae. Preferably, the socket (34) has from about three to about eight sides (37), more preferably six sides.

Once the inventive screw is placed into the bore of the longitudinal spinal stabilizing member (20) and then properly engaged within the vertebra or vertebrae, a crimping tool is used to crimp the lip (25a,b) into the depression (32). An example of a suitable crimping tool (40) is that shown in Figure 12. The inventive tool comprises an elongated rod (45) having a preferably knurled knob (44) at one end for gripping the rod and an engaging means (41) at the other end for

engaging the rod into the socket (34) of the screw. Secured to the elongated rod is an arm (41) having at one end a handle (43) and at the other end a crimping means for crimping a portion of the lip (25a,b) into the screw. A fastener (46), such as bolt or screw, is used to secure the arm (41) to the elongated rod (45), allowing pivotal movement of the arm about the rod.

As shown in Fig. 12, the crimping means may be in the form of a small tooth (42) extending from the elongated rod (45) at an angle towards the screw. The tooth (42) functions to crimp or deform the metal of the orthopedic device into the locking screw. In one embodiment of the inventive tool, the elongated rod (45) is inserted into the socket (34) of the screw, afterwhich torque is applied to the knob (44) to drive the screw into the vertebra. Alternatively, another tool may be used to drive the screw into the vertebra, while the inventive crimping tool is used only to lock the screw into the orthopedic device by crimping, as described above.

Once the inventive screw is in place, the lip (25a,b) may be crimped into one or more of the depressions (32), as shown in Figure 12, by squeezing the handle (43) and knob (44) of the tool together to cause the tooth (42) to crimp or deform a portion of the lip (25a,b) into the depression. The screw may be later removed by breaking away the crimp, i.e. the top portion (28) of the lip which is not engaged into the depression (32).

In the preferred embodiment, the head of the screw (31) is cylindrically-shaped; however, the head may have a plurality of sides (37), preferably from about three to about eight sides, and more preferably six sides. As shown in Figures 12 and 13, the exterior surface of the head preferably includes from about one to about twelve depressions, more preferably from about six to about eight depressions. In the most preferred embodiment, each depression (32) is aligned with each side (37) of the socket (34), as shown in Figure 13, to ensure that the tooth (42) of the crimping tool (40) will crimp the orthopedic device, such as the lip (25a,b) in the present invention, into a depression (32). The engaging means of the crimping tool, which fits into the screw head, and the crimping

tooth, are both at the same distance from the tool pivot (i.e., the location of the fastener (46)). The socket (34) is made to have a depth such that, when the tool is inserted into it, the tooth always meets a depression.

The inventive locking screw may also be used to engage other orthopedic devices as well as bones and bony regions other than the vertebrae and skull. Whether the inventive screw is engaged into an orthopedic device and/or into a bone, the novel feature of the inventive screw is primarily its locking mechanism, namely the crimping of a portion of an orthopedic device into one or more of the depressions present on the screw.

The present inventive locking screw may be formed of any material typically used in the manufacture of orthopedic locking screws. A preferred metal is pure titanium or stainless steel.

Occipital/Spinal Fixation:

The present invention is also related to a modular method and device for posterior occipital/spinal fixation. Referring now to Figures 7 and 8, the present invention is directed to a novel fixation device comprising a plate (100) which may be attached to an optimal position on the occiput, preferably the thickest part of the occiput, to avoid penetration of the intracranial venous sinuses and the brain. In the present invention, the optimal position for attachment of the inventive plate (100) is along the superior nuchal line (SNL). The modular design of the present invention allows for independent placement of the plate or plates and the longitudinal spinal stabilizing device or devices, for example. This is particularly desirable when precision is absolutely necessary for safe insertion of cervical spine lateral mass screws, for example, which would effectively dictate the position and orientation of a combination occipital/cervical plate beyond any substantial control of the surgeon. The foregoing situation is improved by employing bendable occipital/cervical plates, such as the Synthes-type laterally bendable Recon plates; however, the surgeon still has little choice in the exact positioning of the cranial fixation screws. Separate attachment of a plate to the skull and a spinal fixation device

to the spine eliminates all of these problems and allows for safer stabilization.

In addition to the use of a modular system for occipital/spinal fixation, the present invention is related to a novel fixation device for occipital/spinal fixation which allows for unicortical purchase of the skull. Referring now to Figure 7, the present invention comprises the use of a plate (100) having a posterior surface (102) and an anterior surface (101), and which further comprises at least two, and preferably four, angled first bores (104) positioned bilaterally to one another through the plate at an angle. Preferably, a lip (103), similar to the lips (25a,b) present on the inventive posterior longitudinal spinal stabilizing member (20), extends from each bore on the posterior surface (104) of the plate (100), and functions in part to maintain the angle of the bore as well as aid in the locking mechanism of a locking screw.

Figure 10 is an alternate embodiment (200) of the present inventive plate useful for stabilizing a skull fracture, for example. It is important to note that while Figure 11 is a cross-sectional view of the plate (200) depicted in Figure 10, the angle of the bores and the position of the screws shown in Figure 11 are identical to that of the embodiments of the plate designed for attachment to a posterior spinal stabilizing device. Thus, all references to Figure 11 apply equally to the embodiments depicted in Figures 7 and 15.

Referring now to Figures 7 and 11, the present inventive plate further includes a means for connecting the plate to the occiput (C). In the preferred embodiment, the connecting means is a first screw (30) which is inserted into each of the first bores (104 and 204). Based upon the same anatomical study discussed above, a preferred length of each screw (30) is from about 3 mm to about 16 mm, more preferably about 6 mm, to allow only for penetration of the posterior cortex of the occiput (H), as opposed to engagement of both the posterior (H) and anterior (J) cortices. The screw lengths actually employed, however, may vary outside this range depending upon the anatomy of the particular patient. Such unicortical engagement is not only much safer in that it eliminates the risk of penetrating the intracranial venous sinuses, but it is also just as stable

as bicortical fixation by virtue of the angled engagement of the first screws (30) in the bone of the occiput. Such angled engagement of the screws, either converging towards one another (as shown in Figure 11, for example) or diverging away from one another, further minimizes screw pull-out.

The types of screws that can be used in the present invention are preferably locking screws, including the present inventive locking screw described and claimed herein; however, as in the present inventive posterior spinal fixation device, non-locking screws may be used. If the inventive locking screw is employed, the lip (103 and 203) of the plate can also be crimped inward to lock the screw into the plate. Referring to Figure 11, the screw may be later removed by breaking away the top portion of the lip (206) which is not crimped or engaged into the depression.

The inventive plate is preferably formed of a relatively malleable material, such as surgical steel, titanium, and other metals and metal alloys, for example. Other materials typically used by those of skill in the art for use in orthopedic implants may also be employed. It is important that the plate be slightly concave in shape or be malleable enough so that it may be bent into a concave shape to better fit the convex contour of the occiput or other desired region of the skull.

The inventive fixation device further comprises a means for mounting the plate to a longitudinal spinal stabilizing device. In the preferred embodiment, as shown in Figure 7, the mounting means is a slightly elevated platform (108) integral with the posterior surface of the plate (102). The platform (108) preferably includes at least one, more preferably two, second bores (106) for engagement with a longitudinal spinal stabilizing device by a second connecting means, such as a screw (109). In the most preferred embodiment, the platform has at least two sets of at least one, more preferably two, bores (106) to allow for greater flexibility for attachment of the longitudinal spinal device to the plate (100). Alternatively, the platform (108) may include at least two second bores (107) positioned bilaterally to one another in a horizontal plane through which a second connecting means,

preferably at least one wire, may be threaded to secure a longitudinal spinal stabilizing device, such as a rod (51), for example, to the platform (108).

Alternatively, the platform may be eliminated, and instead the longitudinal spinal stabilizing device is mounted directly to the plate by a second connecting means, such as a screw or wire. Thus, in this embodiment, the mounting means is simply at least one second bore (106) positioned centrally through the posterior (102) and anterior surfaces (101) of the plate.

The most preferred longitudinal spinal stabilizing device is the present inventive posterior spinal stabilizing device discussed herein. As shown in Figure 6, the superior end (22) of the inventive longitudinal spinal stabilizing member (20) includes at least one, and preferably two, bores (26c) aligned vertically. These bores, preferably threaded, are in a "neutral" (i.e. horizontal) position, as opposed to being angled, to receive a screw or wire for connecting the member (20) to the mounting means, such as a platform (108), for example. Alternatively, the superior end (22) of a longitudinal spinal stabilizing device, including the present invention, may be attached directly to the occiput; however, this is not a preferred method.

The present inventive spinal stabilizing member (20) preferably contains scallops (27) along the outer edges of the member to afford some flexibility to the member as well to serve as points at which the member can more easily be broken or cut away for purposes of customizing the member to a desired size. This latter aspect of the invention (i.e. the ability to shorten the inventive longitudinal spinal stabilizing member) is particularly useful in that it avoids the necessity of requiring an excessive number of different sized members during surgery. Thus, a more preferred embodiment of the inventive longitudinal spinal stabilizing member (20) would contain several such neutral bores (26c) to allow for a greater number of choices of member size.

Figure 8 illustrates the most preferred embodiment of the present invention, wherein two longitudinal spinal stabilizing devices, preferably the present inventive longitudinal spinal stabilizing device, are employed. In this embodiment, the two

longitudinal spinal stabilizing members (20) are positioned bilaterally to one another along the posterior surface of the vertebrae, and the superior ends (22) of each member are attached to a separate plate (100) connected to the occiput.

Alternatively, a single spinal rod (51), for example, may be bent, as illustrated in Figure 15, and mounted to a single plate (300) by wires (307), for example. Similarly, the rod could be cut at a particular point (52) into two separate rods, each attached to a single plate (300) as shown in Figure 15. Or in lieu of two rods, two other types of longitudinal spinal stabilizing devices, including the present inventive longitudinal stabilizing member (20) may be mounted to a single plate (300) by an appropriate connecting means. Suitable connecting means include, but are not limited to, screws, wires, bolts, pins, and other similar types of fasteners. While this foregoing embodiment of the present invention is not the most preferred method of occipital/spinal stabilization, this alternate method may in rare cases be necessary when it is impossible or extremely difficult to attach two plates to the occiput.

Unicortical Skull and General Bone Stabilization:

The present invention is also directed, in certain embodiments, to a method of unicortical stabilization of skull bone due to a fracture or a craniotomy and employs a minor variation of the inventive occipital fixation device, namely the plate. Referring to Figure 11, the inventive plate (200) may be shaped like a "dogbone" and does not require a platform or any other means for mounting the plate to another device. The term "craniotomy" as used herein refers to the surgical removal of a portion of the skull, as in a partial craniectomy. As for the embodiment of the plate illustrated in Figures 7 and 15, for example, the plate (200) depicted in Figures 9, 9a, 9b, and 10 also has a posterior surface (202) and an anterior surface (201), as well as at least two, and preferably four, angled first bores (204) positioned bilaterally to one another through the plate at an angle, as shown in Figures 10 and 11.

As shown in Figure 9, for stabilization of a skull fragment in the repair of a craniotomy, the skull fragment (G) is

inserted into a skull opening formed from the craniotomy. The skull opening and the outer edge (1) of the skull fragment (G) define a junction (F). The present inventive method comprises aligning the plate (200) over the junction (F) on the posterior surfaces of the skull and skull fragment such that the junction (F) is located between the bores (204). As shown in Figure 11, preferably a screw (30), more preferably the inventive locking screw, is inserted into each of the bores to penetrate the posterior cortex of the skull (H) for unicortical engagement. Other fasteners may be employed in lieu of screws, including, but not limited to, bolts, pins, nails, and the like. As for the present inventive method for occipital/spinal fixation, the screws are positioned bilaterally to one another at either a converging angle (as shown in Figure 11) or at a diverging angle. The skull fragment is thus stabilized to prevent it from subsiding into the brain and to promote a more cosmetically pleasing repair. Once the skull has healed, the plate may be removed.

Similarly, the present inventive plate may be used to stabilize a skull fracture, the only difference being that the junction (F), as shown in Figure 9, is now the line of fracture. In this use of the inventive plate, the fracture is stabilized to prevent further damage to the skull as well as to promote bone growth at the line of fracture (F) for better healing.

The inventive plate used for unicortical skull stabilization and posterior occipital/spinal stabilization may also be used for general bone stabilization in other regions of the skull and body. Figures 9a and 9b illustrate one embodiment of the inventive method for stabilizing a mandible of a skull. Preferably, at least one inventive plate (100) is connected to a posterior surface of the skull. One end of at least one longitudinal orthopedic stabilizing device (52) is then attached directly to the mandible, while the other end of the device (52) is attached to the plate (100). Alternatively, a second plate (100) can also be connected to the mandible such that the longitudinal orthopedic device (52) is mounted to two plates, as shown in Figure 9b.

It is also within the scope of the present invention that

the inventive plates (100, 200, 300) may be used to stabilize bone and bone fractures located in regions of the body other than the skull and spine. Examples of such uses include, but are not limited to, (1) fixation of the bones of the pelvis to the lumbar spine or to the femur, (2) fixation of the tibia to the femur or to the bones of the foot, (3) fixation of the radius or ulna to the humerus or to the bones of the hand, and (4) fixation of the scapula to the clavicle or humerus. In addition, the inventive plate may be used to stabilize fractures in a single bone located in another region of the body, including, but limited to, the bones listed above.

The foregoing disclosure and description of the invention are illustrative and explanatory thereof, and changes in the size, shape, and materials, as well as in the details of the illustrated construction may be made without departing from the spirit of the invention.

## CLAIMS

What is claimed is:

1. A fixation device for use in posterior occipital-spinal fixation, wherein said fixation device comprises:

(a) a plate having a posterior surface and an anterior surface;

(b) connecting means for connecting said plate to an occiput of a skull; and

(c) mounting means for mounting said plate to a longitudinal spinal stabilizing device fixedly attached to the posterior surfaces of at least two vertebrae, of a spine.

2. The fixation device of claim 1, wherein said plate further comprises at least two angled first bores therethrough positioned bilaterally to one another through said plate, and wherein said connecting means is a first screw engaged within each of said first bores for unicortical, angled engagement of said plate to said occiput.

3. The device of claim 2, wherein said anterior surface of said plate is concave.

4. The device of claim 2, wherein said plate is formed of a malleable material.

5. The device of claim 2, wherein said posterior surface of said member further includes a raised lip above said posterior surface and extending from said angled bores, and wherein each said screw is a locking screw comprising a head and a threaded longitudinal cylindrical piercing member integral with said head, said head comprising (a) an exterior surface defining a circumference of said head, (b) at least one depression positioned on said exterior surface for crimping engagement within said raised lip, and (c) a top portion integral with said exterior surface, wherein said top portion has a socket for insertion of a tool for engaging said locking screw into said longitudinal spinal fixation member and said at least two vertebrae.

6. The fixation device of claim 2, wherein said mounting means comprises an elevated platform integral with said posterior surface, wherein said platform includes at least one second bore for engagement with said longitudinal spinal stabilizing device by a second connecting means for connecting said

longitudinal stabilizing device to said platform.

7. The fixation device of claim 2, wherein said platform includes at least two sets of at least one second bore for engagement with said longitudinal spinal stabilizing device by a second connecting means for connecting said longitudinal stabilizing device to said platform.

8. The fixation device of claim 6, wherein said second connecting means comprises a second screw engaged through each of said at least one second bore for securing said platform to said longitudinal spinal stabilizing device.

9. The fixation device of claim 6, wherein said platform comprises at least one set of two second bores therethrough, and wherein said connecting means comprises at least one wire threaded through each of at least one set of said second bores for securing said longitudinal spinal stabilizing device to said platform.

10. The fixation device of claim 9, wherein said longitudinal spinal stabilizing device is a rod.

11. A method for internal posterior occipital-spinal fixation, comprising the steps of:

(a) connecting at least one plate to an optimal position on an occiput, wherein said plate comprises a posterior surface, an anterior surface, and a connecting means for connecting said plate to said occiput;

(b) attaching at least one longitudinal spinal stabilizing device to posterior sides of at least two spinal vertebrae of a spine, said at least two vertebrae including an inferior-most vertebra, and wherein said longitudinal spinal stabilizing device has a superior end and an inferior end; and

(c) mounting said superior end of each of said longitudinal spinal stabilizing device to said at least one plate.

12. The method of claim 11, wherein said plate further comprises at least two angled, first bores positioned bilaterally to one another through said plate, and further including a first screw engaged within each of said first bores, wherein each of said first screws penetrates a posterior cortex of said occiput at an angle for unicortical engagement.

13. The method of claim 12, wherein said first screws are engaged at a converging angle toward one another.

14. The method of claim 12, wherein said optimal position of said plate to said occiput is a superior nuchal line of said occiput.

15. The method of claim 14, wherein said attaching step comprises attaching two plates bilaterally to one another along said superior nuchal line of said occiput, and wherein said mounting step comprises connecting said superior end of each of said longitudinal spinal stabilizing device to each of said plate.

16. The method of claim 12, wherein said mounting means comprises an elevated platform integral with said posterior surface of said plate and having at least one second bore, and wherein mounting said longitudinal spinal stabilizing device to said plate further comprises first inserting a second screw through each of at least one bore located through said longitudinal spinal stabilizing device and then through each of said at least one second bore of said platform.

17. The method of claim 11, wherein said longitudinal spinal stabilizing device is attached to at least two adjacent cervical vertebrae of said spine.

18. The method of claim 11, wherein said longitudinal spinal stabilizing device is attached to at least two adjacent thoracic vertebrae of said spine.

19. The method of claim 11, wherein said step of attaching said longitudinal spinal stabilizing device to said vertebrae further comprises (a) inserting a first screw through each of one or more at least one downwardly-angled bore contained through said longitudinal spinal stabilizing device, and then penetrating with said first screw a posterior cortex of a lateral mass of a first vertebra, an inferior articular surface of said first vertebra, and a superior articular surface of a second vertebra subjacent to said first vertebra; and (b) inserting a second screw through each of one or more upwardly-angled bores contained through the inferior end of said longitudinal spinal stabilizing device, and then penetrating with said second screw a posterior cortex of a lateral mass of said inferior-most vertebra.

20. The method of claim 19, wherein said vertebrae are cervical vertebrae of said spine.

21. The method of claim 12, wherein said mounting means is an elevated platform integral with said posterior surface of said plate and having at least one set of two second bores, each of at least one set containing at least one wire therethrough, and wherein said connecting comprises attaching at least one wire to the superior end of said longitudinal stabilizing device.

22. A method for internal posterior spinal stabilization, comprising (a) drilling each of at least one first bore at a downward angle through a posterior cortex of a lateral mass of a first vertebra of a spine and an inferior articular surface of said first vertebra of a spine; (b) drilling each of at least one second bore at a downward angle through a superior articular surface of a second vertebra subjacent to said first vertebra; (c) drilling each of at least one third bore at an upward angle through a posterior cortex of a lateral mass of said inferior-most vertebra; and (d) inserting a first screw through said each of at least one first bore and said second bore to stabilize said first and second vertebrae of a spine.

23. The method of claim 22, wherein said downward angle and said upward angle are from about 35 degrees to about 60 degrees.

24. The method of claim 22 wherein said first and second vertebrae are cervical spinal vertebrae in a series of at least two adjacent vertebrae selected from the group consisting of vertebrae C-2, C-3, C-4, C-5, C-6, and C-7 of said spine.

25. The method of claim 24 wherein said downward angle and said upward angle are about 35 degrees to about 60 degrees.

26. The method of 22, wherein said steps of drilling comprise drilling two first bores, two second bores, and two third bores, and wherein said method further comprises:

(e) placing a longitudinal spinal stabilizing device along a posterior surface of at least said first and second vertebrae and between said two first bores;

(f) inserting a first screw through each of said two first bores and each of said two second bores to secure said longitudinal spinal stabilizing device to said vertebrae; and

(g) inserting a first screw through each of said two first bores and each of said two second bores and a second screw through each of said third bores.

27. A posterior spinal stabilizing device for a spine, comprising:

(A) a longitudinal spinal stabilizing member comprising (a) a superior end (b) an inferior end, (c) an anterior surface, (d) a posterior surface, (e) at least one downwardly-angled bore contained therethrough, and (f) at least one upwardly-angled bore contained therethrough, wherein said at least one upwardly-angled bore is located on the inferior end of said member;

(B) a first screw engaged within each of one or more said downwardly-angled bore for engagement of two vertebrae of said spine, one of which is an inferior-most vertebra of the two; and

(C) a second screw engaged within each of one or more said upwardly-angled bore for engagement of the inferior-most vertebra.

28. The device of claim 27, wherein said upwardly-angled bore and said downwardly-angled bore are positioned at from about a 30-degree angle to about a 60-degree angle.

29. The device of claim 27, wherein said upwardly angled bore and said downwardly angled bore are positioned at from about a 40-degree angle to about a 50-degree angle.

30. The device of claim 27, wherein said posterior surface of said member further includes a raised lip above said posterior surface and extending from said angled bores, and wherein each said screw is a locking screw comprising a head and a threaded longitudinal cylindrical piercing member integral with said head, said head comprising (a) an exterior surface defining the circumference of said head, (b) at least one depression positioned on said exterior surface for crimping engagement within said raised lip, and (c) a top portion integral with said exterior surface, wherein said top portion has a socket for insertion of a tool for engaging said locking screw into said longitudinal spinal fixation member and said vertebrae.

31. The device of claim 27, wherein said superior end of said longitudinal spinal stabilizing member further comprises at least one neutral bore contained therethrough and a mounting means for mounting said member to an occiput.

32. The device of claim 31, wherein said mounting means is a

third screw engaged within each of one or more said at least one neutral bore for mounting said superior end of said longitudinal spinal stabilizing member to said occiput.

33. The device of claim 32, wherein said mounting means further includes a plate mounted to said occiput, wherein said superior end of said longitudinal spinal stabilizing member is attached to said plate by said third screw engaged within each of one or more said at least one neutral bore.

34. A method for internal posterior spinal stabilization of a spine, comprising mounting a longitudinal spinal stabilizing member, with at least two screws, to at least two vertebrae of said spine, said vertebrae including an inferior-most vertebra, by (a) inserting a first screw through each of one or more at least one downwardly-angled bore contained through said longitudinal spinal stabilizing member, and then penetrating with said first screw a posterior cortex of a lateral mass of a first vertebra, an inferior articular surface of said first vertebra, and a superior articular surface of a second vertebra subjacent to said first vertebra; and (b) inserting a second screw through each of one or more at least one upwardly-angled bore contained through the inferior end of said longitudinal spinal stabilizing member, and then penetrating a posterior cortex of a lateral mass of said inferior-most vertebra.

35. The method of claim 34, wherein said vertebrae are cervical vertebrae in a series of at least two adjacent vertebrae selected from the group consisting of vertebrae C-2, C-3, C-4, C-5, C-6, and C-7 of said spine.

36. The method of claim 34, wherein said vertebrae are thoracic vertebrae of said spine.

37. A screw for use in orthopedic devices, comprising a head and a longitudinal cylindrical piercing member integral with said head, wherein said head further comprises (a) an exterior surface defining the circumference of said head, (b) at least one depression positioned on said exterior surface for crimping engagement within the orthopedic device, and (c) a top portion integral with said exterior surface, wherein said top portion has a socket for insertion of a tool for engaging said screw into said orthopedic device.

38. A method of unicortical skull fracture stabilization,

comprising (a) aligning a plate over a line of fracture on a posterior surface of a skull, wherein said plate comprises at least two angled bores positioned bilaterally to another through said plate and wherein said line of fracture is located between said at least two angled bores; and (b) inserting a screw through each of at least two angled bores and penetrating a posterior cortex of said skull with said screw for unicortical engagement. 39. The method of claim 38, wherein said screws are engaged at a converging angle towards one another.

39. The method of Claim 38, wherein said screws are engaged at a converging angle towards one another.

40. A method of repairing a craniotomy, comprising:

(a) inserting a skull fragment, having a posterior surface, an anterior surface, and an outer edge, into a skull opening formed from said craniotomy, said skull having a posterior surface, and wherein said skull opening and said outer edge of said skull fragment define a junction;

(b) aligning a plate over said junction on said posterior surface of said skull, wherein said plate comprises at least two angled bores positioned bilaterally to another through said plate, and wherein said junction is located between said at least two angled bores; and

(c) inserting a screw through each of said at least two angled bores and penetrating a posterior cortex of said skull with said screws for unicortical engagement.

41. The method of claim 40, wherein said screws are engaged at a converging angle towards one another.

42. A drill guide for guiding a drill bit through at least one vertebra, said drill guide comprising:

(a) a superior wall;

(b) an inferior wall;

(c) a posterior wall integral with said superior and inferior walls;

(d) an anterior wall integral with said superior and inferior walls; and

(e) two side walls integral with said superior, inferior, posterior, and anterior walls; wherein said anterior and posterior walls comprise at least one bore positioned in a

downward angle therethrough.

43. The drill guide of claim 42, wherein said downward angle is from about 30 to about 60 degrees.

44. The drill guide of claim 42, wherein said anterior and posterior walls further include at least one bore positioned in an upward angle therethrough.

45. The drill guide of claim 44, wherein said upward angle is from about 30 degrees to about 60 degrees.

46. A tool for locking a screw into an orthopedic device comprising:

(a) an elongated rod having a gripping means for gripping said rod at one end and an engaging means for engaging said rod into a screw head at another end of said rod;

(b) an arm pivotally secured to said elongated rod, said arm having a handle at one end of said arm and a crimping means at the other end of said arm for crimping a portion of said orthopedic device into a lateral aspect of said screw to lock said screw into said orthopedic device; and

(c) a fastener for fastening said arm to said rod for pivotal movement.

47. A method of skull bone fixation comprising:

(a) connecting at least one plate to a posterior surface of a skull, said plate comprising at least two angled first bores positioned bilaterally to one another through said plate and a first screw engaged within each of said first bores, wherein each of said first screws penetrate a posterior cortex of said skull at an angle for unicortical engagement;

(b) attaching a first end of at least one longitudinal orthopedic stabilizing device to a mandible of a skull; and

(c) mounting a second end of said longitudinal orthopedic stabilizing device to said at least one plate.

48. The method of claim 47, wherein said mandible comprises a second plate attached thereon, said second plate comprising at least two angled first bores positioned bilaterally to one another through said plate and a first screw engaged within each of said first bores, and wherein said first end of at least one longitudinal orthopedic stabilizing device is attached to said second plate.

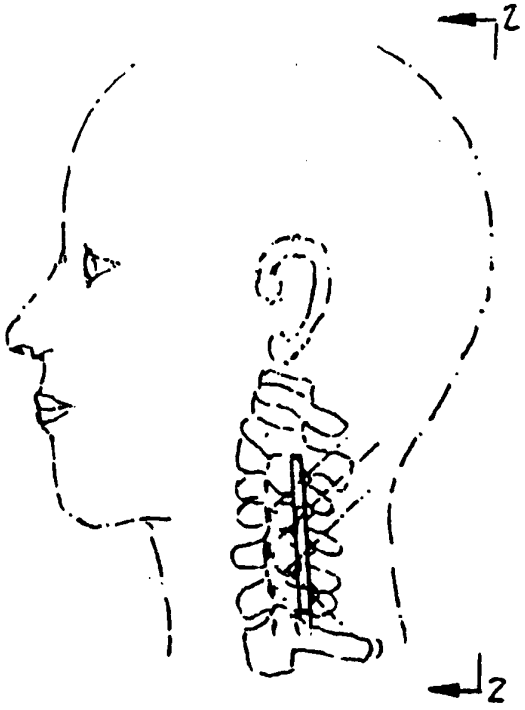


FIG.1

FIG.2

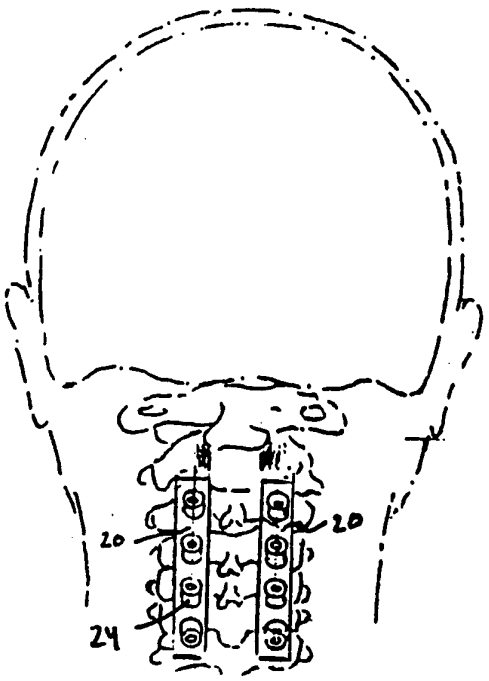


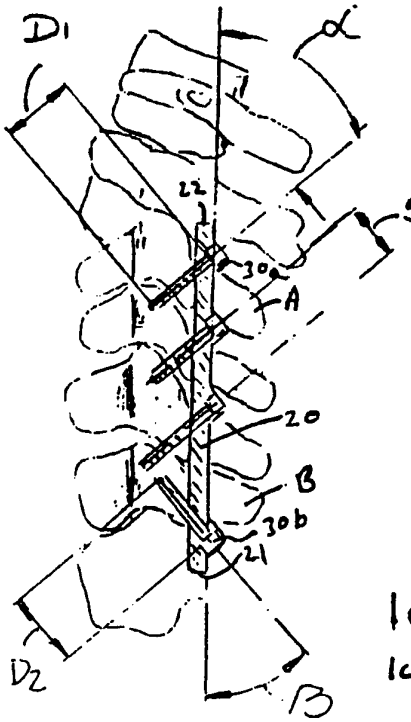


FIG.3

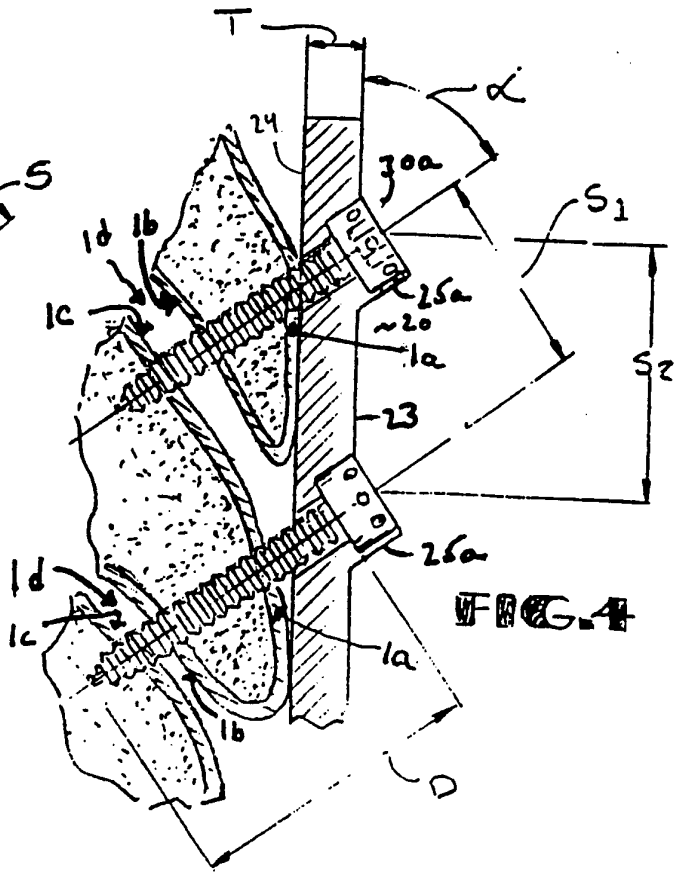


FIG.4

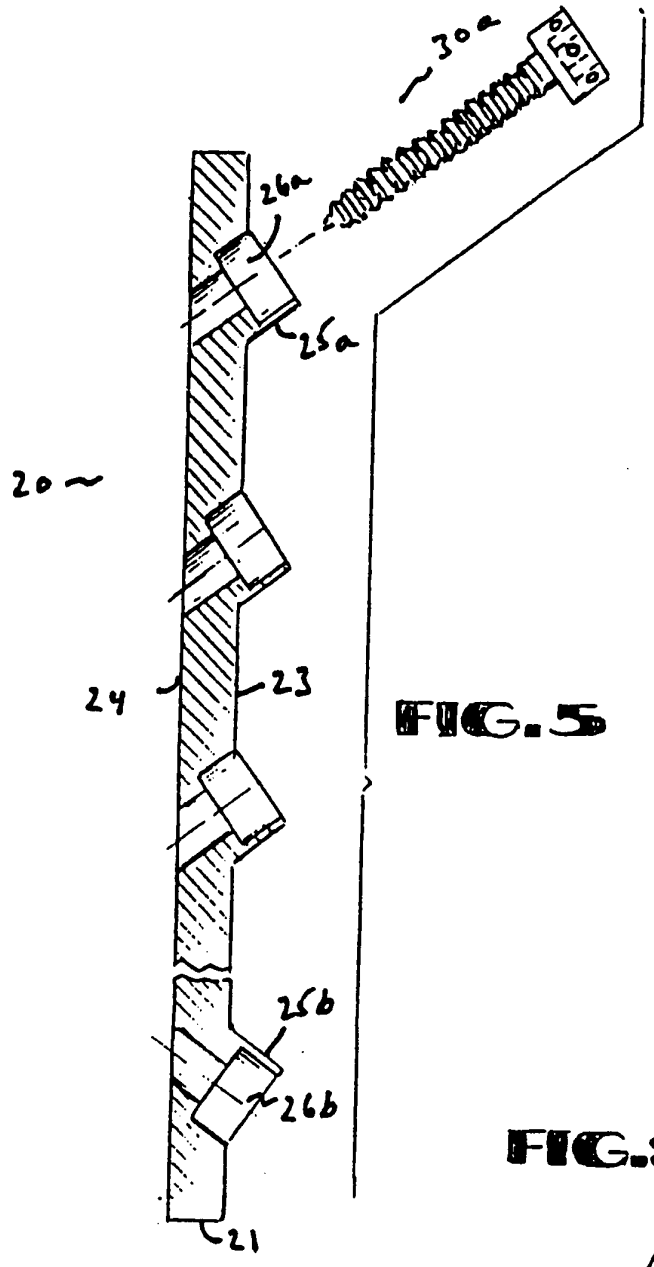


FIG. 5

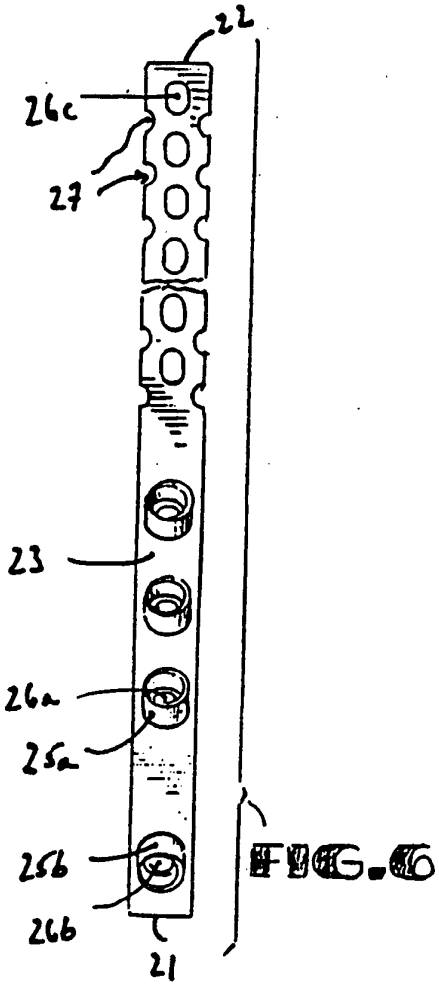


FIG. 6

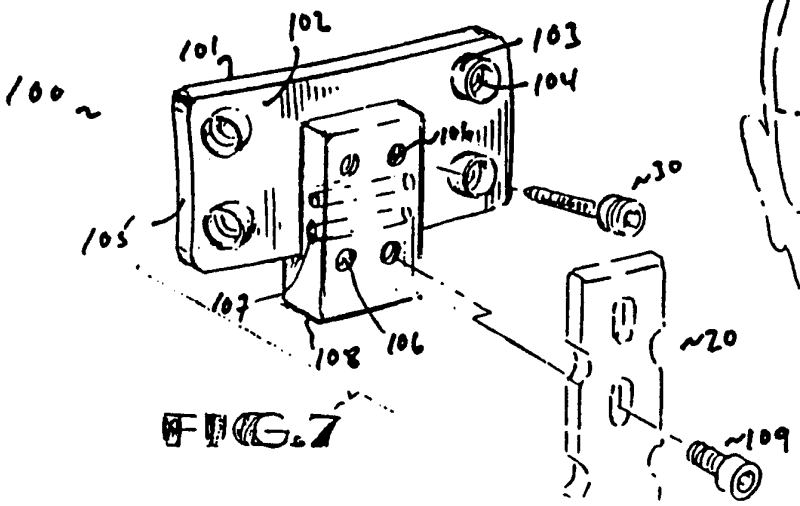


FIG. 7

FIG. 8

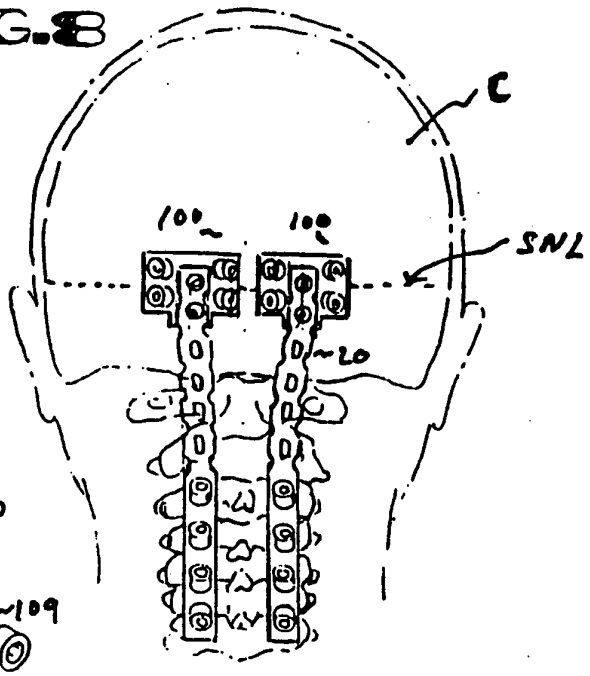

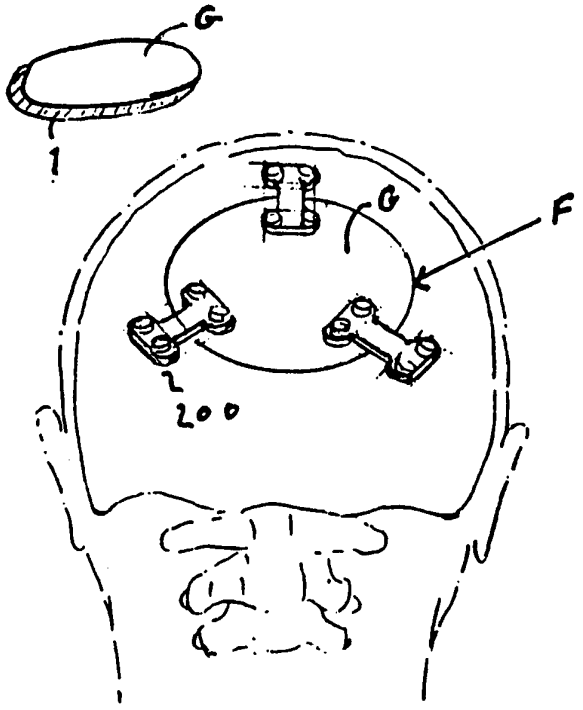


FIG. 9

FIG. 10

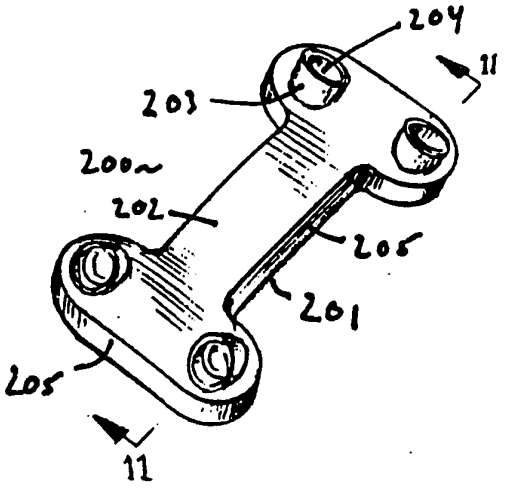


FIG. 11

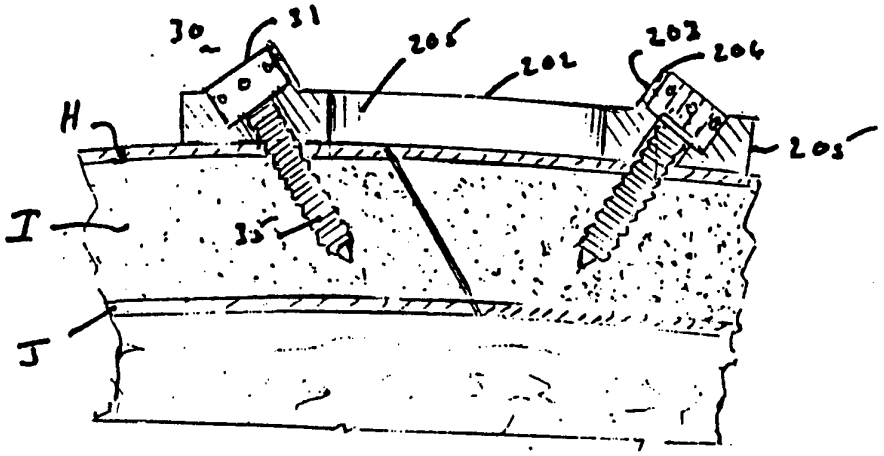

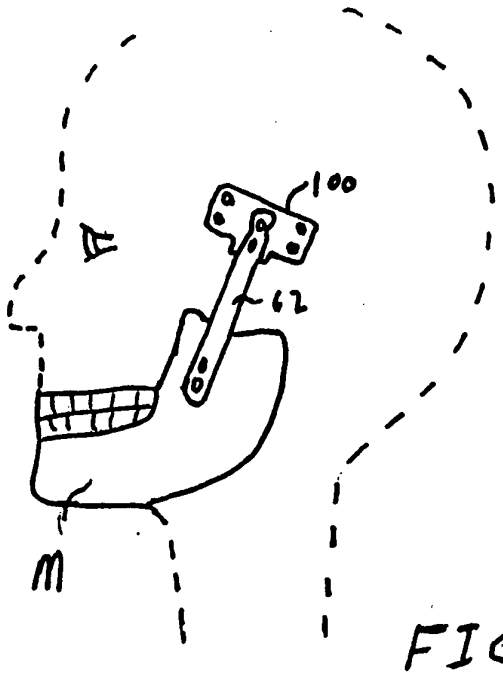


FIG 9a

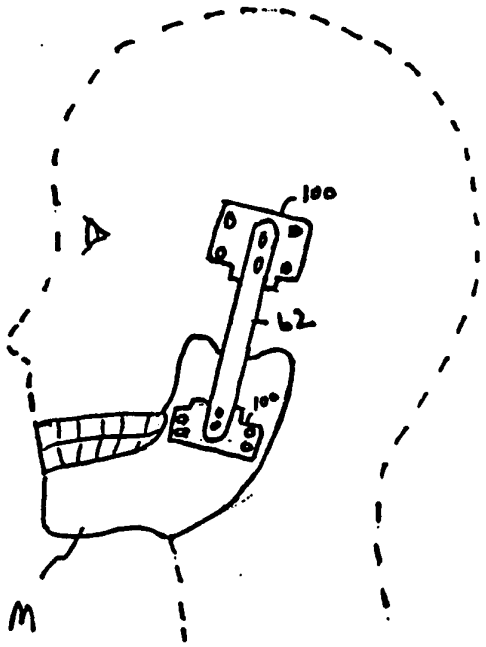


FIG 9b

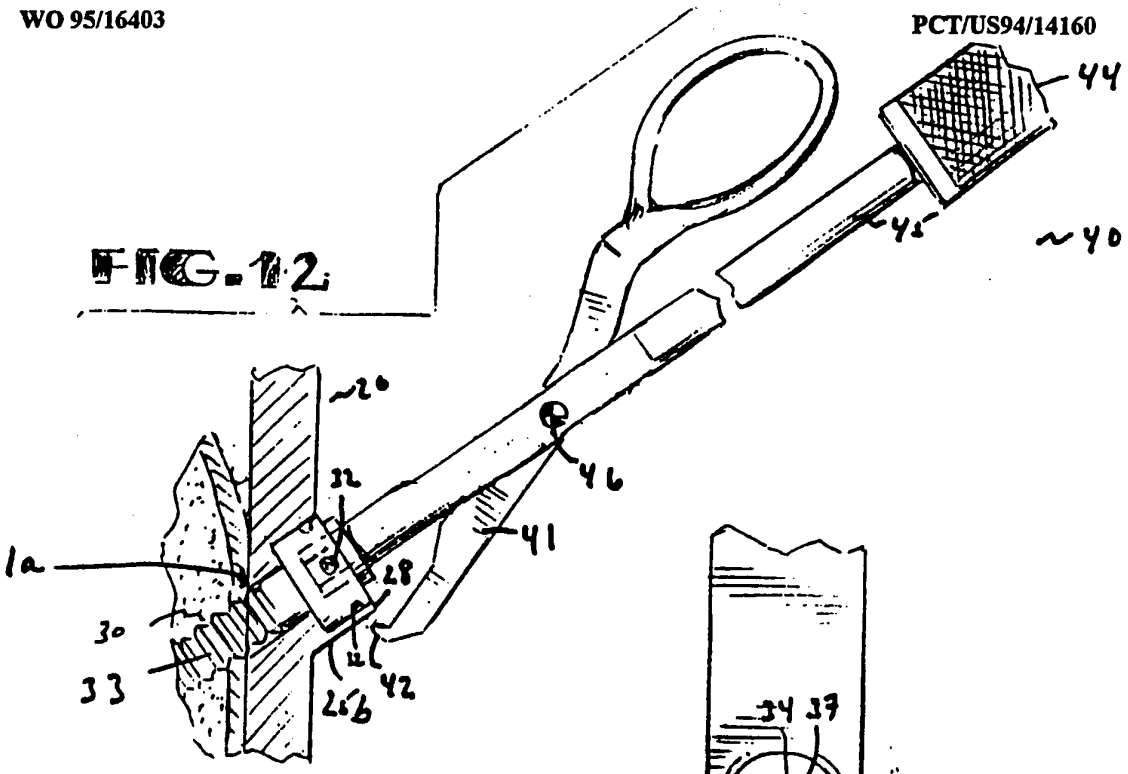


FIG. 12




FIG. 13

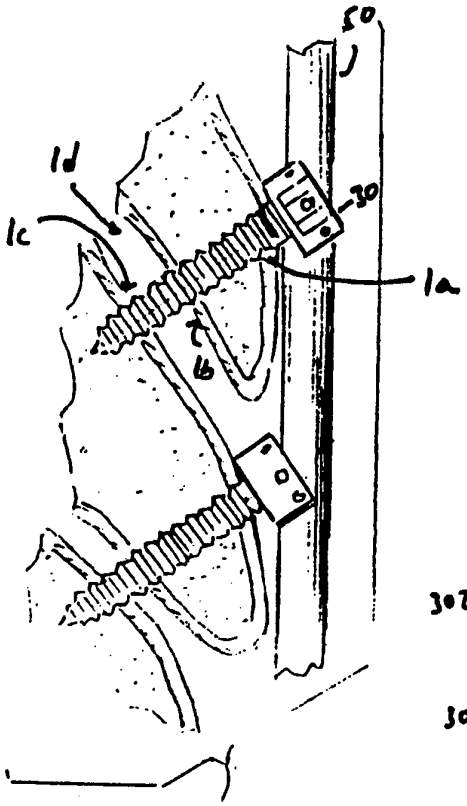


FIG. 14

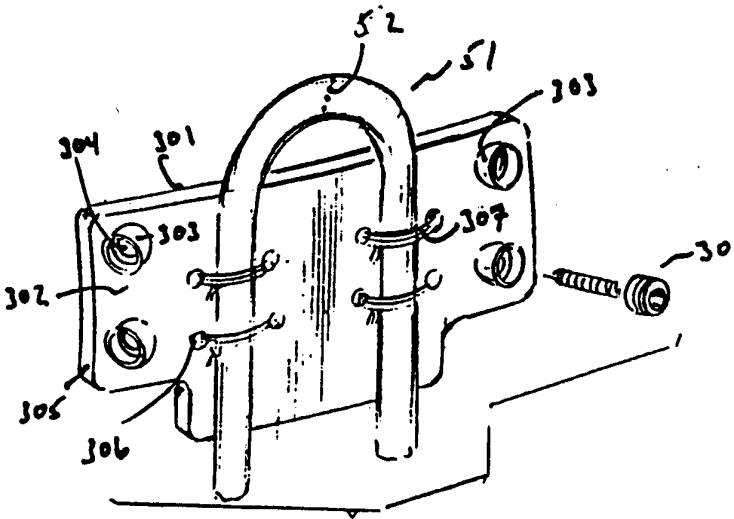


FIG. 15

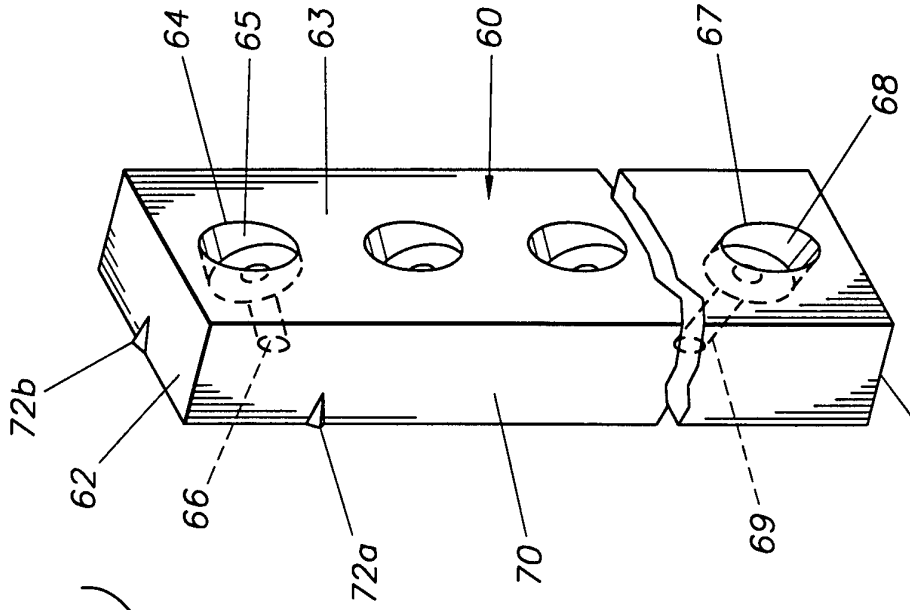
64
65
63
60
67
68
72b
62
66
72a
70
69
61

FIG. 17

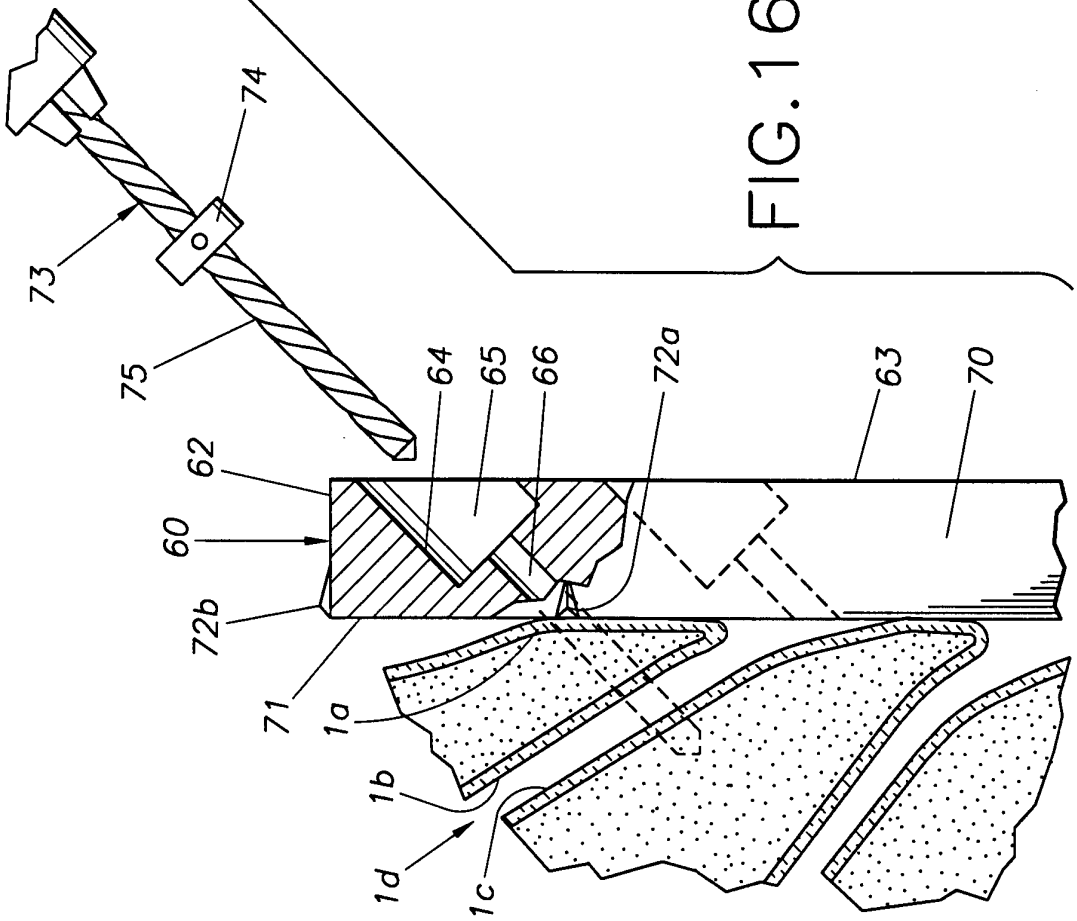
74
73
75
64
65
66
72a
63
70
62
60
72b
71
1a
1b
1d
1c

FIG. 16

# INTERNATIONAL SEARCH REPORT

International application No.
PCT/US94/14160

A. CLASSIFICATION OF SUBJECT MATTER
IPC(6) :A61B 17/70
US CL :606/61, 69, 96
According to International Patent Classification (IPC) or to both national classification and IPC

B. FIELDS SEARCHED

Minimum documentation searched (classification system followed by classification symbols)
U.S. : 72/409, 410; 81/436, 468; 411/402, 402, 405, 410; 606/61, 69, 73, 96

Documentation searched other than minimum documentation to the extent that such documents are included in the fields searched
NONE

Electronic data base consulted during the international search (name of data base and, where practicable, search terms used)
NONE

C. DOCUMENTS CONSIDERED TO BE RELEVANT

| Category* | Citation of document, with indication, where appropriate, of the relevant passages | Relevant to claim No. |
|---|---|---|
| X | US, A, 3,741,205 (MARKOLF ET AL.) 26 June 1973. See Figs. 1 and 2. | 27 |
| X | US, A, 375,206 (E. DE F. SHELTON) 20 December 1887. See entire document. | 37 |
| X | US, A, 4,381,770 (NEUFELD) 03 May 1983. See element (52) having a downward bore (90), and an upward bore (76). | 42-45 |
| X | EP, A, 0 290 138 (POLLOCK R A) 09 November 1988. See Figs. 15-20. | 38-41 |
| X | DT, A, 827 510 (JEAN MELZNER) 10 January 1952. See the figure. | 46 |

[X] Further documents are listed in the continuation of Box C. [ ] See patent family annex.

| | | | |
|---|---|---|---|
| * | Special categories of cited documents: | "T" | later document published after the international filing date or priority date and not in conflict with the application but cited to understand the principle or theory underlying the invention |
| "A" | document defining the general state of the art which is not considered to be part of particular relevance | "X" | document of particular relevance; the claimed invention cannot be considered novel or cannot be considered to involve an inventive step when the document is taken alone |
| "E" | earlier document published on or after the international filing date | "Y" | document of particular relevance; the claimed invention cannot be considered to involve an inventive step when the document is combined with one or more other such documents, such combination being obvious to a person skilled in the art |
| "L" | document which may throw doubts on priority claim(s) or which is cited to establish the publication date of another citation or other special reason (as specified) | "&" | document member of the same patent family |
| "O" | document referring to an oral disclosure, use, exhibition or other means | | |
| "P" | document published prior to the international filing date but later than the priority date claimed | | |

Date of the actual completion of the international search
20 MARCH 1995

Date of mailing of the international search report
04APR1995

Name and mailing address of the ISA/US
Commissioner of Patents and Trademarks
Box PCT
Washington, D.C. 20231
Facsimile No. (703) 305-3230

Authorized officer
TAMARA L. GRAYSAY
Telephone No. (703) 308-0858

Form PCT/ISA/210 (second sheet)(July 1992)*

# INTERNATIONAL SEARCH REPORT

International application No.
PCT/US94/14160

C (Continuation). DOCUMENTS CONSIDERED TO BE RELEVANT

| Category* | Citation of document, with indication, where appropriate, of the relevant passages | Relevant to claim No. |
|---|---|---|
| A, P | US, A, 5,360,429 (JEANSON ET AL.) 01 November 1994. See Fig. 1, and column 1 line 45 through column 2 line 59. | 1 |