United States Patent

Powell

[15] **3,638,070**

[45] **Jan. 25, 1972**

[54] FLUORESCENT LAMP STARTING AND CONTROL CIRCUIT

[72] Inventor: **Richard W. Powell,** 19147 Kinzie St., Northridge, Calif. 91324

[22] Filed: **Oct. 17, 1969**

[21] Appl. No.: **867,239**

[52] **U.S. Cl.**.....**315/163,** 315/164, 315/170, 315/205, 315/337, 315/DIG. 5, 315/DIG. 4

[51] **Int. Cl.**.....**H05b 41/392,** H05b 41/44

[58] **Field of Search**.....315/100 D, 100 H, 100 U, 101, 315/160, 163, 164, 167, 170, 171, 173, 185, 187, 189, 200, 202, 205, 208, 337

[56] **References Cited**

UNITED STATES PATENTS

3,222,574	12/1965	Silvestri	315/200
3,238,415	3/1966	Turner	315/160
3,462,643	8/1969	Turner et al.	315/101
3,471,747	10/1969	Gershen	315/205

Primary Examiner—John Kominski
Attorney—Roger A. Marrs

[57] **ABSTRACT**

A fluorescent lamp starting and control circuit and a color display employing same. A pair of power supplies respectively provide a high-positive voltage directly to the anode and a high-negative voltage via a large resistance to the cathode of a fluorescent lamp. Subsequent to starting, lamp current flows through a unidirectional, low-resistance path back to power supply neutral. Control of the fluorescent lamp brightness is accomplished by modulating the current through this low-resistance path. The circuit may be used in a display apparatus employing differently colored fluorescent lamps independently modulated in response to selected frequency range components of an externally supplied audio signal.

19 Claims, 3 Drawing Figures

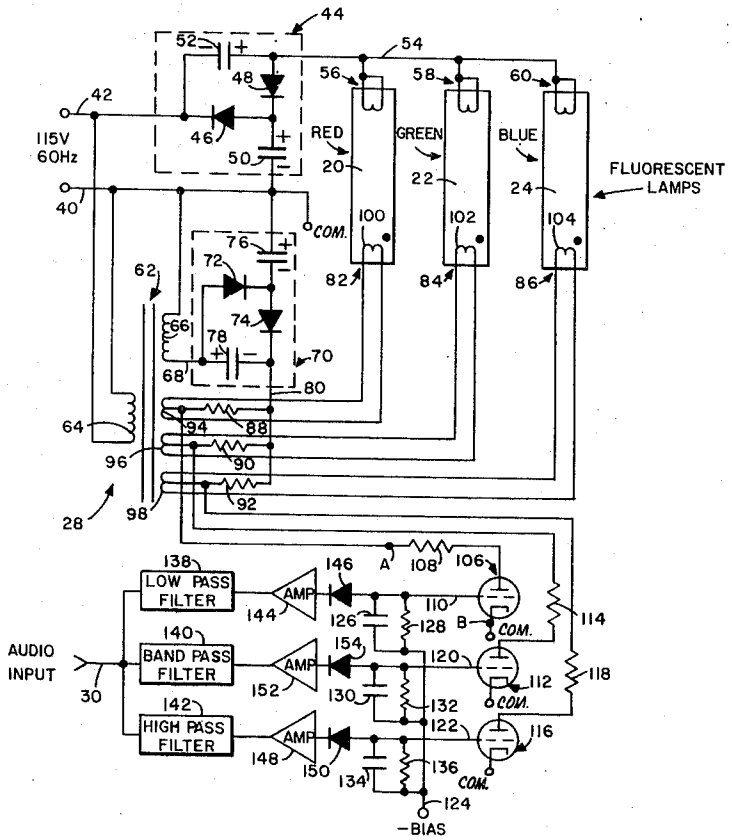

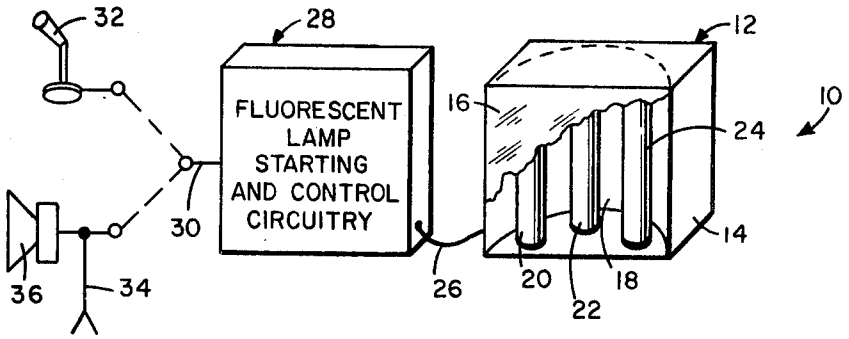

FIG 1

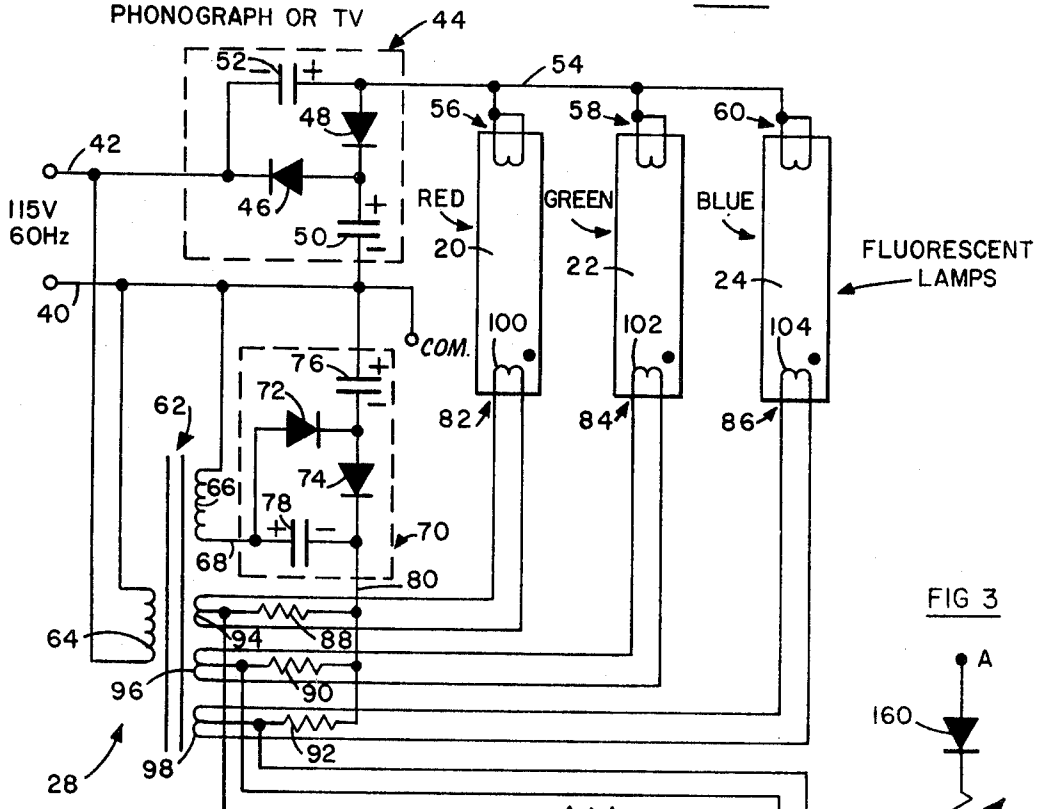

FIG 2

FIG 3

INVENTOR.
RICHARD W. POWELL
BY
Roger A. Marino

FLUORESCENT LAMP STARTING AND CONTROL CIRCUIT

BACKGROUND OF THE INVENTION

1. Field of the Invention

The present invention relates to a gas discharge tube such as a fluorescent lamp starting and control circuit, and more particularly, to a fluorescent lamp color display system employing an instant starting and control circuit which facilitates independent, linear control of the brightness of a plurality of differently colored fluorescent lamps.

2. Description of the Prior Art

In recent years, a variety of color display systems have become available for use with audio reproduction systems. These devices have gained widespread acceptance among hi-fi enthusiasts, music listeners and the like, because they add an extra visual dimension to the enjoyment of music. In particular, the devices provide an ever-changing light pattern varying in intensity and color in response to and in unison with the music or other audio signal being reproduced.

Almost without exception, the light display devices previously available have employed incandescent lamps, since instantaneous control of the brightness of such lamps has in the past been more readily obtained than for fluorescent lamps. Often the incandescent lamps were controlled by saturable core reactors, which supplied modulated power to the lamps. In other systems, controlled feedback circuitry was used to drive the incandescent lamps. In such systems, the feedback signal was integrated over an appropriately chosen time cycle to provide dynamic modulation from an audio source of any sound level or frequency and to ensure a residual light level in the complete absence of sound.

A characteristic of incandescent lamps is that the light appears to emanate from a point or small source. To avoid this difficulty, prior art color displays often employed a plurality of incandescent lamps. In some systems, a serial selection scheme was used so that over a period of time, the light would appear to come from different ones of a large plurality of physically separated lamps.

All of these prior art systems suffered from the shortcoming that the light from the several lamps could not readily be blended to form a coherent display. Further, the light output or brightness of an incandescent lamp inherently is a nonlinear function of the current through such lamp. As a result, some circuits use complicated electronic circuits to obtain a linear relationship between the lamp brightness and the audio sound level.

The present invention overcomes these and other shortcomings of the prior art by providing a light display system using gas discharge or fluorescent lamps. The use of such fluorescent lamps permits blending of the light from several lamps in a way which is much more esthetically pleasing than from individual incandescent lamps. Moreover, once started, the brightness of a fluorescent lamp is a linear function of the current supplied to the lamp. This permits linear control of the brightness of a color display without the necessity for complex electronic circuitry.

The gas discharge and fluorescent lamp starting and control circuit of the present invention has utility independent of such color display application. Thus, the circuitry may be used for instantly starting one or more fluorescent lamps, and for independently maintaining such lamps at preselected brightness levels once they have been started and in automatically restarting such a lamp in the event it extinguishes. In the past, such circuits have been unavailable or complex in configuration.

SUMMARY OF THE INVENTION

In accordance with the present invention, there is provided a fluorescent lamp starting and control circuit, and a color display system employing the same. The starting and control circuit itself comprises a pair of power supplies which respectively provide a high positive voltage directly to the anode terminal of a fluorescent lamp, and a high negative voltage, via a relatively high resistance, to the fluorescent lamp cathode terminal. A unidirectional, low-impedance current path is provided from the fluorescent lamp cathode terminal to the neutral or common connection of the power supplies.

When the power supplies are energized, the sum of the high voltages appears across the fluorescent lamp, causing it instantly to start. As soon as started, the voltage drop across the lamp is sufficiently low as to cause the cathode terminal to be slightly positive with respect to the power supply neutral or common connection. Subsequently, current flowing through the fluorescent lamp passes through the unidirectional, low-resistance current path back to neutral, bypassing the second power supply. Since the brightness of a fluorescent lamp is directly proportional to the current supplied to the lamp, control of the resistance in the low-impedance current path permits corresponding control of the brightness of the lamp.

In a preferred embodiment, each of the power supplies comprises a substantially unfiltered voltage multiplier circuit. The unidirectional, low-resistance current path typically includes a tube and a plate load resistor series connected between the cathode terminal of the fluorescent lamp and the neutral connection of the power supplies. Once the lamp has been started, the brightness of the lamp may be modulated linearly by controlling the voltage on the grid of the tube in the low-resistance current path. In alternative embodiments, the current modulator may comprise a transistor or a diode series connected with a variable resistance.

When the inventive circuit is employed in a color display, a plurality of differently colored fluorescent lamps may be started from the same pair of power supplies. Independent unidirectional, low-resistance current paths are provided from the cathode terminals of each fluorescent lamp, facilitating independent current modulation of each lamp. In a typical embodiment, the audio signal which is used to drive the color display is separated into components of different frequency range, as by using a low-pass, a high-pass and a band-pass filter. The outputs of the filters are supplied independently to the control grids of the current modulator tubes in the respective fluorescent lamp control circuits. Accordingly, the light level from the lamps is controlled in response to, and in unison with the various components of the audio signal.

By heating the cathodes of the fluorescent lamps, a supply of electrons is available for immediate ionization of the lamps in response to demands of the current modulators. Moreover, by providing resistor-capacitor (RC) time constant in the grid circuit of each of the current modulator tubes, subliminal flashing of the fluorescent lamps is prevented.

Thus, it is an object of the present invention to provide an improved fluorescent lamp starting and control circuit.

It is also an object of the present invention to provide a color display apparatus employing fluorescent lamps.

Another object of the present invention is to provide circuitry for instantly starting a fluorescent lamp and for controlling the brightness of the lamp once it has been started.

Another object of the present invention is to provide a circuit for starting or restarting a fluorescent lamp by supplying to the lamp AC-modulated power from DC multiplier rectifiers.

It is another object of the present invention to provide an improved color display apparatus using fluorescent lamps, the brightness of each of which is independently controlled by a novel current modulator circuit in response to an audio signal.

It is still another object of the present invention to provide a fluorescent lamp color display employing a pair of substantially unfiltered high-voltage power supplies connected in reversed phase relationship for starting the fluorescent lamps and employing low-impedance current modulators for controlling the brightness of the lamps subsequent to starting.

Still another object of the present invention is to provide a fluorescent lamp color display wherein a high negative voltage is connected to the cathode terminals of the fluorescent lamps via a large resistance to start the lamps, and wherein sub-

sequent to starting, lamp current flows through a unidirectional, loweresistance current path.

Yet another object of the present invention is to provide a fluorescent lamp starting and control circuit comprising a first voltage multiplier circuit supplying a high positive voltage directly to the anode of a fluorescent lamp, a second voltage multiplier supplying a high negative voltage through a high resistance to the cathode of a fluorescent lamp, and a unidirectional, low-resistance current path from the cathode terminal to the neutral connection of the power supplies for controlling lamp current subsequent to turn-on of the lamps.

It is a further object of the present invention to provide a sound-responsive display apparatus using a plurality of differently colored fluorescent lamps the current through which is independently, substantially linearly modulated by selected frequency range components of an input audio signal.

BRIEF DESCRIPTION OF THE DRAWINGS

Still other objects, features, and attendant advantages of the present invention will become apparent to those skilled in the art from a reading of the preferred embodiments constructed in accordance therewith, taken in conjunction with the accompanying drawings wherein like numerals designate like parts in the several figures, and wherein;

FIG. **1** is a simplified diagrammatic view of a sound-responsive color display system using fluorescent lamps and incorporating the inventive fluorescent lamp starting and control circuitry;

FIG. **2** is an electrical schematic diagram of the inventive fluorescent lamp control circuitry as utilized in the sound-responsive color display system of FIG. **1**; and

FIG. **3** is an electrical schematic diagram showing an alternative embodiment of the current control means employed in the circuitry of FIG. **2**.

DESCRIPTION OF THE PREFERRED EMBODIMENTS

Referring now to the drawings, and particularly to FIG. **1** thereof, there is shown a sound-responsive color display system **10** in accordance with the present invention. Display system **10** includes a lamp housing or light box **12** having opaque sides **14** and a transparent or translucent front **16**. Within housing **12** is a reflector **18** for directing the light from a plurality of fluorescent lamps **20**, **22** and **24** out through front **16**.

Electrical signals for starting and controlling the brightness or brilliance of fluorescent lamps **20**, **22** and **24** are provided via a cable **26** from appropriate circuitry **28** described in detail in conjunction with FIG. **2** below. Circuitry **28** facilitates instant starting of lamps **20**, **22** and **24**, and individually controls the brilliance of these lamps in response to an audio signal provided on a line **30**. This audio signal may be supplied from a microphone **32**, or alternatively the signal may be supplied via a line **34** from the audio output of a radio, phonograph, TV or the like. In the latter instance, the symbol designated **36** in FIG. **1** represents the loudspeaker normally associated with the equipment providing the audio signal.

As described below, fluorescent lamps **20**, **22** and **24** each may be of a different color. Moreover, the brilliance of particular lamps may be made to vary in response to certain frequency components of the audio signal supplied on line **30**. In this manner, the light emanating from housing **12** presents a changing color pattern which varies in brilliance and color composition exactly in unison with the supplied audio signal. Thus color display system **10** adds an extra dimension to the enjoyment of music and the like.

Details of fluorescent lamp starting and control circuitry **28** are shown in FIG. **2**. Referring thereto, circuitry **28** is supplied with 60 Hz. AC voltage, at a nominal 115 volts RMS (root mean square), via a pair of lines **40** and **42**. This AC source voltage is supplied directly to a first voltage multiplier circuit **44** comprising a pair of diodes **46** and **48** and a pair of capacitors **50** and **52**. As described below, voltage multiplier **44** provides via a line **54** a high voltage to the anodes **56**, **58** and **60** of respective fluorescent lamps **20**, **22** and **24**. The voltage on line **54** is positive (+) with respect to the neutral or common connection **40** of power supply **44**.

The AC voltage supplied on lines **40** and **42** also provides the input to a transformer **62**. The primary winding **64** and secondary winding **66** of transformer **62** can be any ratio, such as a 1:1 ratio, so that the AC signal appearing across winding **66**, between lines **40** and **68**, is of similar magnitude to the voltage across lines **40** and **42**. However, winding **66** is connected so that the voltage at line **68** is reversed in phase (i.e., approximately 180° out of phase) with respect to the voltage on line **42**, common line **40** remaining at neutral or ground potential.

The AC voltage supplied by phase reversal transformer winding **66** provides the input to a second voltage multiplier circuit **70** consisting of a pair of diodes **72** and **74** and a pair of capacitors **76** and **78**. Multiplier circuit **70** provides on a line **80** a high voltage which is negative (−) with respect to common line **40**. This high negative voltage on line **80** is supplied to cathode terminals **82**, **84** and **86** of fluorescent lamps **20**, **22** and **24** via respective resistors **88**, **90** and **92**. Preferably, each of resistors **88**, **90** and **92** is of relatively high resistance value.

It will be recognized that voltage multiplier **44** operates in the following manner: During the half of the AC cycle when line **42** is positive with respect to line **40**, current flows from line **42** through diode **46** and capacitor **50** back to line **40**. This charges capacitor **50** to the nominal peak voltage of the AC supply. Since the AC supply is 115 volts RMS, this peak voltage is on the order of 165 volts.

During the next half of the AC supply cycle, line **42** is negative with respect to line **40**. Accordingly, current flow is now from line **40** through capacitor **50**, diode **48** and capacitor **52** back to line **42**. The charge stored by capacitor **50** during the preceding half cycle effectively is in series with the voltage supplied across lines **40** and **42**. Accordingly, the effective voltage across capacitor **52** is twice the peak voltage obtained from the supply. As a result, capacitor **52** is charged to a peak voltage level of $2\times165=330$ volts.

The output of voltage doubler **44** is substantially unfiltered. Thus, the voltage appearing on line **54**, as measured with respect to neutral or common line **40**, is 330 volts, plus a superimposed 115 volt RMS ripple voltage. As a result, the effective voltage on line **54** varies from between about +165 volts DC to about +495 volts DC less normal losses occurring in voltage multiplier **44**.

Voltage multiplier **70** operates in a manner exactly analogous to voltage multiplier **44**, and provides on line **80** a voltage which varies between about −165 volts DC and −495 volts DC with respect to neutral or common line **40**.

Because of the operation of phase reversal transformer **62**, the voltage on line **80** is reversed in phase with respect to that on line **54**. That is, the nominal voltage on line **80** reaches a peak of −495 volts DC at the same time that the voltage on line **54** reaches a peak of +495 volts DC. Similarly, the nominal voltages on lines **54** and **80** reach respective minimum values +165 volts DC and −165 volts DC at the same time. By virtue of this phasing, voltage appearing between the anodes **56**, **58** and **60** and cathode terminals **82**, **84** and **86** of respective fluorescent lamps **20**, **22** and **24** varies between 330 volts DC and 990 volts DC at a rate determined by the powerline frequency. The voltage level is set to insure instant starting of fluorescent lamps **20**, **22** and **24** when an AC voltage is connected to lines **40** and **42** of circuitry **28**.

Transformer **62** (FIG. **2**) also includes three low-voltage, center-tapped heater windings **94**, **96** and **98**. These windings may be connected respectively to the cathode heater windings **100**, **102** and **104** of fluorescent lamps **20**, **22** and **24**. The voltage supplied by windings **94**, **96** and **98** acts to heat the fluorescent lamp cathodes, thereby insuring that a supply of electrons is available for immediate ionization of the lamps in response to demands of the current modulators, such as tube **106** and resistor **108** described below. Although resistors **88**,

90 and 92 are shown connected to the center taps of windings 94, 96 and 98, this is not required, and the resistors could be connected directly to one end of the respective heater windings.

Still referring to FIG. 2, a current modulator or current control means is associated with a cathode terminal of each of fluorescent lamps 20, 22 and 24. In the embodiment shown, the current modulator for fluorescent lamp 20 comprises a tube 106 and a plate load resistor 108 connected in series between common and cathode terminal 82 of lamp 20. In particular, one end of resistor 108 is connected to the junction of resistor 88 and the center tap of cathode heater winding 94. The other end of resistor 108 is connected to the plate of tube 106. The cathode of tube 106 is connected to neutral line 40 which represents the common connection between voltage multipliers 44 and 70.

The characteristics of tube 106 and the value of resistor 108 are selected so that when tube 106 is conducting, a low-impedance path is presented between cathode terminal 82 of fluorescent lamp 20 and neutral line 40. Preferably, the effective resistance in this path is considerably lower than the value of resistor 88. Note moreover that current flow through tube 106 is unidirectional, from point A (FIG. 2) to point B. In particular, current only will flow through resistor 108 and tube 106 when the effective voltage at cathode terminal 82 of fluorescent lamp 20 is positive with respect to neutral line 40. The amount of current flow through tube 106 is controlled by the voltage level on line 110 to the grid of tube 106.

Similar current control means are provided for fluorescent lamps 22 and 24. Thus, current flow to cathode terminal 84 of fluorescent lamp 22 is controlled by a tube 112 connected in series with a plate load resistor 114 between neutral line 40 and the junction of resistor 90 and the center tap of heater winding 96. Similarly, current to cathode terminal 86 of fluorescent lamp 24 is controlled by a tube 116 connected in series with a plate load resistor 118 between neutral line 40 and the junction of resistor 92 and the center tap of heater winding 98.

Recall that prior to starting, the voltage drop across fluorescent lamp 20 is equal to the sum of the voltages on lines 54 and 80. As soon as fluorescent lamp 20 starts, the voltage drop across the lamp is less than 100 volts. Accordingly, after fluorescent lamp 20 has started, the voltage at cathode terminal 82 will be positive with respect to line 40 and, assuming that tube 106 is not biased to cut off by the grid control voltage on line 110, current will start to flow from cathode terminal 82 through resistor 108 and tube 106 to ground. Since the impedance of this path is significantly lower than the resistance of resistor 88, essentially all of the current through fluorescent lamp 20 will flow through the path from point A to point B, and little current will flow from power supply 70 through resistor 88. Moreover, the brightness of a fluorescent lamp once it is started is directly proportional to the current flow through the lamp, thus control of the current through tube 106 permits corresponding control of the brightness of fluorescent lamp 20.

Similarly, once fluorescent lamps 22 and 24 have started, the voltage drop through each of these lamps also is approximately 100 volts, so that cathode terminals 84 and 86 both become slightly positive with respect to neutral line 40. Assuming tubes 112 and 116 are not biased to cut off, subsequent to starting the currents through lamps 22 and 24 flow primarily through the low-impedance paths provided respectively by tube 112 and resistor 114 and by tube 116 and resistor 118. Under these conditions, relatively little current flows from voltage multiplier 70 through the large value resistors 90 and 92. The brightness of lamp 22 then may be controlled by varying the grid control voltage on line 120 to tube 112, while the brightness of fluorescent lamp 24 independently may be controlled by varying the grid control voltage on line 122 to tube 116. In the event any of the tubes 106, 112, or 116 become biased to cut off, the starting circuit consisting of power supply 70 and resistors 88, 90 or 92 will maintain a ready ionized condition in fluorescent tubes 20, 22 or 24 to accommodate instant response should current flow in the cutoff tube.

Still referring to FIG. 2, a negative grid bias voltage is provided to tubes 106, 112 and 116 via a line 124. Line 124 is connected to the grid of tube 106 via a parallel-connected capacitor 126 and resistor 128. As discussed below, this RC circuit provides a grid bias time constant which prevents subliminal flashing of fluorescent lamp 20. Similarly, bias line 124 is connected to the grid of tube 112 via a parallel-connected capacitor 130 and resistor 132, and to the grid of tube 116 via a parallel-connected capacitor 134 and resistor 136. Capacitor 130 and resistor 132 provide a grid bias time constant which prevents subliminal flashing of fluorescent lamp 22 while capacitor 134 and resistor 136 provide grid bias time constant for tube 116 which prevents subliminal flashing of fluorescent lamp 24.

In the embodiment shown in FIG. 2, fluorescent lamps 20, 22 and 24 are arranged to vary in brightness in accordance with an audio signal, which may be amplified, provided along line 30. In particular, the audio input is separated into components having different frequency ranges by a set of filters 138, 140 and 142. Components of the audio signal having frequencies below a selected value are passed by low-pass filter 138 to an amplifier 140 and the resultant signal supplied via a diode 146 to the grid of tube 106. Components of the audio input signal on line 30 having frequencies above the cutoff frequency of high-pass filter 142 are amplified by an amplifier 148 and supplied via a diode 150 to the grid of tube 116. Components of the audio signal on line 30 having frequencies between those passed by low-pass filter 138 and high-pass filter 142 are passed by band-pass filter 140 to an amplifier 152 and a diode 154. The output of diode 154 is supplied via line 120 to the grid of tube 112.

When no audio signal is applied to line 30, tube 106, 112 and 116 essentially are biased to cutoff by the negative voltage supplied on 124. This negative voltage also back biases diodes 146, 150 and 154. Thus, only signal excursions having a value which is positive with respect to the level of the bias voltage on line 124 are supplied to the grids of tubes 106, 112 and 116. These signal excursions cause conduction of tubes 106, 112 and 116, modulating the current to the respective fluorescent lamps 20, 22 and 24 in unison with the audio signal components passed by respective filters 138, 140 and 142.

The signals supplied by diodes 146, 150 and 154 also tend to charge the respective capacitors 126, 134 and 130. Thus should the signal excursions from any of diodes 146, 150 and 154 drop below the bias level on line 124, the associated tube 106, 116 or 112 will not be cut off instantaneously, but will remain conducting as the associated capacitor 126, 134 or 130 discharges through its respective resistor 128, 136 or 132.

It will be appreciated that tube 106 and resistor 108 together provide a unidirectional, low-impedance current path from point A to point B (FIG. 2), the resistance in this path being controllable by the voltage on line 110 to the grid of tube 106. In general, the path from A to B may be represented by a series connected diode 160 and variable resistance 162, as illustrated in FIG. 3. In this schematic representation, the resistance of element 162 is understood to be controllable in response to some external condition or signal, such as an audio signal. The effective circuit of FIG. 3 may be implemented by a tube and a load resistor as shown in FIG. 2, by an actual diode and a variable resistor or by other well-known arrangements of circuit components. Thus, for example, the effective circuit also could be implemented by an NPN or PNP-transistor (not shown) connected for appropriate unidirectional current flow between collector and emitter thereof, and having an external control signal applied to the transistor base.

Operation of the inventive fluorescent lamp starting and control circuitry 28 (FIG. 2), and of the light display apparatus 10 (FIG. 1) incorporating such circuitry, now should be apparent. With lines 40 and 42 connected to a nominal

115-volt, 60 Hz. voltage source, power supply **44** provides a high positive voltage on line **54** and power supply **70** provides a high negative voltage on line **80**. The sum of these two voltages effectively is supplied across each of parallel-connected fluorescent lamps **20**, **22** and **24**, causing these lamps to start instantly.

As soon as lamps **20**, **22** and **24** are started, the voltage drop across the lamps is reduced to 100 volts or less, causing cathode terminals **82**, **84** and **86** to be at a positive potential with respect to neutral line **40**. Accordingly, the current through lamps **20**, **22** and **24** no longer effectively flows through respective resistors **88**, **90** and **92** to power supply **70**, but rather flows through the unidirectional, low-impedance current paths including respective current modulator tubes **106**, **112** and **116**. Thus power supply **70** effectively is shunted out once the fluorescent lamps are lit. By supplying the negative electrode heaters **100**, **102** and **104** with appropriate voltages via transformer heater windings **94**, **96** and **98**, a supply of electrons is available for immediate ionization of lamps **20**, **22** and **24** in response to demands of the current modulators.

The brightness of each of fluorescent lamps **20**, **22** and **24** may be varied independently by controlling the current through the associated current modulator tube **106**, **112** and **116**. In the embodiment of FIG. **2**, the brightness of lamps **20**, **22** and **24** is controlled respectively by the low-frequency, midfrequency and high-frequency components of an audio signal supplied on line **30** from a microphone, radio, phonograph, TV or the like. These audio signal components, supplied via filters **138**, **140** and **142**, modulate the current through respective tubes **106**, **112** and **116**, thereby directly controlling the brightness of the respective red, green and blue fluorescent lamps **20**, **22** and **24**. Subliminal flashing of these fluorescent lamps during the brief periods when the audio signal components fall below a threshold level is prevented by the operation of the RC circuit associated with the grid of each of tubes **106**, **112** and **116**. Accordingly, the light provided from lamp housing **12** presents a visual pattern varying in color and intensity exactly in unison with the audio signal provided on line **30**. The resultant display is esthetically pleasing and enhances the listeners' enjoyment of music and the like.

While the inventive fluorescent lamp starting and control circuitry has been described in conjunction with a color display apparatus, this is not the only application of such circuitry. Thus, circuitry **28** may be used to start instantly one or more fluorescent lamps, without subsequent modulation of the brightness of these lamps. In such application, the unidirectional, low-resistance current path (FIG. **3**) from the cathode terminal of the fluorescent lamp to power supply neutral need not be of variable resistance, but may include a fixed resistance of appropriate value to maintain the fluorescent lamp at a constant, preselected brightness level. Circuitry **28** may be used to start only a single fluorescent lamp, or simultaneously to start a plurality of such lamps. In the latter instance, the effective value of resistor **162** in the unidirectional, low-resistance current path associated with each of the fluorescent lamps may be set at the same value or at mutually different values.

When employed in a light display apparatus of the type described, it is not necessary that the fluorescent lamps **20**, **22** and **24** be of the colors indicated. Alternatively, the lamps may be of the same color, different shades of the same color, or totally different colors. Moreover, while three lamps are shown, the invention is not so limited, and any number of fluorescent lamps may be used in the display circuitry.

In the embodiment shown herein, lamps **20**, **22** and **24** are modulated independently in response to various frequency components of an audio signal. However, this is not necessary, and all three fluorescent lamps could be modulated simultaneously by the unfiltered audio signal supplied on line **30**. Alternatively, a different combination of filters may be used so that different mutually exclusive or overlapping frequency ranges may be used to modulate the various fluorescent lamps.

Yet other modifications of the invention are envisioned. Thus, it is not necessary that tubes be used to modulate the current to, and, hence, the brightness of, fluorescent lamps **20**, **22** and **24**. Alternatively, other circuit elements providing variable resistance may be used, including but not limited to manually or automatically controlled resistors, transistors and the like. Further, while power supplies **44** and **70** have been shown herein as voltage multiplier circuits, this is not required. These circuits could be replaced by conventional transformer-type power supplies, or by other voltage multipliers, care being taken to provide the reverse phase relationship between the signals on lines **54** and **80**.

While the invention has been described with respect to several physical embodiments constructed in accordance therewith, it will be apparent to those skilled in the art that various modifications and improvements may be made without departing from the scope and spirit of the invention.

What is claimed is:

1. A circuit for starting a gas discharge or fluorescent lamp, said circuit comprising:

a source of AC voltage, one terminal of said source being designated as neutral;

a first voltage circuit powered directly from said source, said circuit including means for providing substantially unfiltered DC voltage of a first polarity and including means connected to a first terminal of said fluorescent lamp for applying the unfiltered DC voltage of said first polarity thereto;

a second voltage circuit powered in reversed phase relationship from said source, said circuit including means for providing substantially unfiltered DC voltage of a second polarity and including means connected to a second terminal of said fluorescent lamp for applying the unfiltered DC voltage of said second polarity thereto; and

control means connected between said lamp terminals for isolating one of said fluorescent lamp terminals from neutral before said lamp is started and for connecting said one fluorescent lamp terminal to neutral once said lamp has started.

2. A circuit as defined in claim **1** wherein said first and second voltage circuits are multiplier circuits and said second voltage multiplier circuit is connected to said source via a phase reversal transformer, and wherein the DC voltage from a selected one of said multiplier circuits is connected to the corresponding terminal of said fluorescent lamp via a large resistance.

3. A circuit as defined in claim **2** wherein said first voltage multiplier circuit comprises a substantially unfiltered voltage doubler providing a positive voltage to the anode terminal of said fluorescent lamp and wherein said second voltage multiplier circuit comprises a substantially unfiltered voltage doubler providing a negative voltage via said large resistance to the cathode terminal of said fluorescent lamp.

4. A circuit as defined in claim **3** further comprising means for heating the cathode terminal of said fluorescent lamp.

5. A circuit as defined in claim **3** wherein said control means comprises a tube, the plate of said tube being connected to said cathode terminal of said fluorescent lamp, the cathode of said tube being connected to neutral, the voltage on the grid of said tube controlling the current through said tube and said fluorescent lamp, the brightness of said fluorescent lamp thereby being responsive to said grid voltage.

6. A circuit as defined in claim **2** wherein said control means comprises a unidirectional low-impedance current path between said corresponding terminal and neutral.

7. A circuit as defined in claim **6** wherein said control means comprises at least one circuit element having the effective function of a diode series connected with a resistance of low value.

8. A circuit as defined in claim **7** further comprising means for varying the effective resistance of said circuit element, the brightness of said fluorescent lamp being responsive to said effective resistance.

9. A light display apparatus comprising:

a plurality of gas discharge lamps each having an anode and a cathode terminal;

a source of AC voltage, one terminal of said source being designated as neutral;

a first voltage multiplier circuit connected to said source and including means for supplying a positive voltage to the anode terminals of each of said gas discharge lamps;

a second voltage multiplier circuit connected to said source in reversed phase relationship and including means for supplying a negative voltage to the cathode terminals of each of said gas discharge lamps via respective resistors of large value; and

separate control means coupled between said lamp terminals for providing a unidirectional low-resistance current path from the cathode terminal of each of said gas discharge lamps to neutral, the effective resistance in each of said control means controlling the brightness of the respective gas discharge lamp.

10. A light display apparatus as defined in claim **9** wherein each of said first and second voltage multiplier circuits is substantially unfiltered, and further comprising means for heating the cathode of each of said gas discharge lamps.

11. A light display apparatus as defined in claim **10** wherein each of said control means comprises at least one circuit element exhibiting the function of a diode series connected with a variable resistance of low value, and means for varying the value of said resistance in response to an audio signal.

12. A light display apparatus as defined in claim **11** further comprising means for supplying an audio signal, filter means for separating said audio signal into components having different frequency ranges, and wherein the value of said resistance in each of said control means is varied in response to a respective component of said audio signal.

13. A light display apparatus as defined in claim **10** wherein each of said gas discharge lamps is of a different color.

14. A light display apparatus as defined in claim **10** further comprising a like plurality of tubes, the cathode terminal of each of said gas discharge lamps being connected to the plate of a respective one of said tubes, the cathodes of each of said tubes being connected to neutral, the grid control voltage of each of said tubes controlling the brilliance of the associated gas discharge lamp.

15. A light display apparatus as defined in claim **10** further comprising means for supplying an audio signal, a like plurality of filters for separating said audio signal into components having different frequency ranges, and means for varying the grid control voltage of each of said tubes in response to a respective one of said audio signal components.

16. A light display apparatus as defined in claim **15** comprising three gas discharge lamps of different color and wherein said plurality of filters comprises a low-pass filter, a band-pass filter and a high-pass filter.

17. A fluorescent lamp control circuit for use with a fluorescent lamp having at least two terminals comprising:

first and second power supply means having a common neutral connection, said first power supply means providing a voltage of one polarity and phase directly to one terminal of said fluorescent lamp, said second power supply means providing a voltage of opposite polarity and opposite phase via a high resistance to the other terminal of said fluorescent lamp;

means operably connected between said lamp terminals and said common neutral connection for providing a unidirectional, low-resistance current path from said other terminal to said common neutral connection; and

means for controlling the current flow through said current path.

18. The invention as defined in claim **17** wherein said first power supply means provides means for combining an AC voltage with a DC voltage to produce an unfiltered AC/DC varying power level.

19. The invention as defined in claim **18** wherein said second power supply means provides said AC component of said level in reversed phase and said DC component of said level in reversed polarity.

* * * * *