(No Model.)

# W. R. SCHMIDT.

## BOX FASTENER.

No. 456,436. Patented July 21, 1891.

Fig. I.

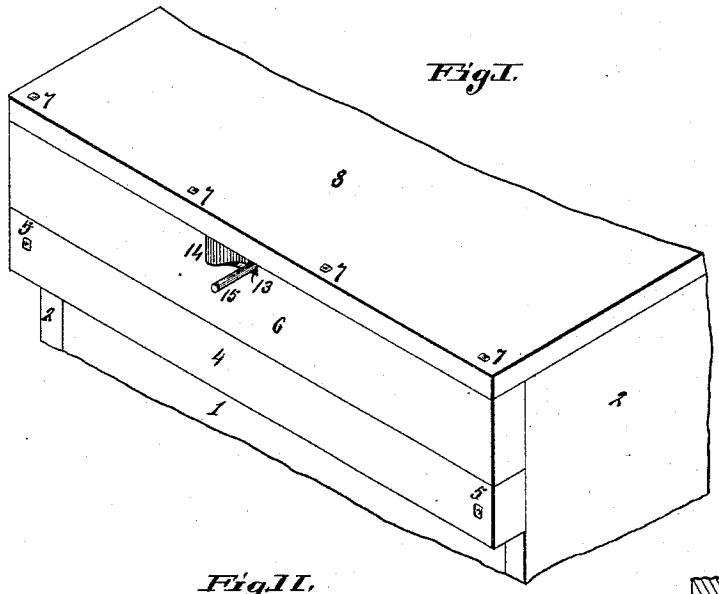

Fig. II.

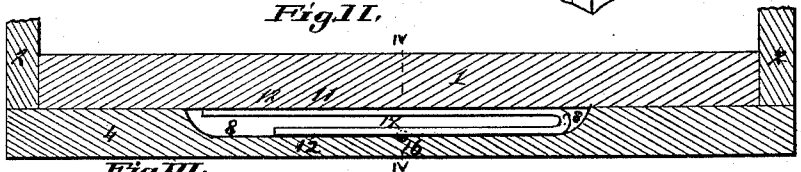

Fig. III.

Fig. IV.

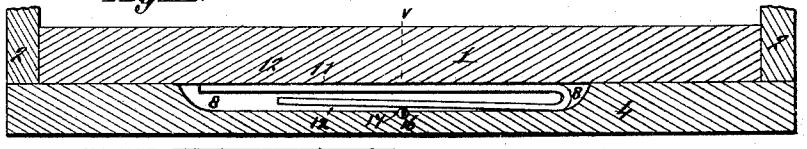

Fig. V.

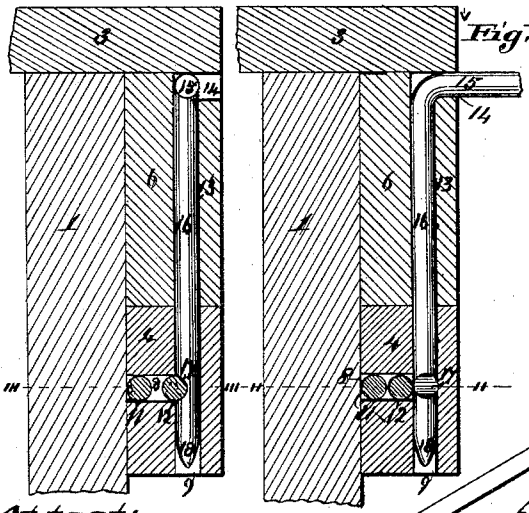

Fig. VI.

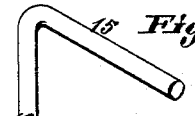

Fig. VII.

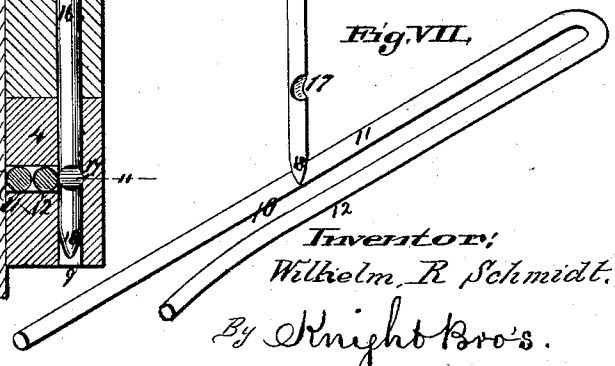

Attest:
Charles Pickles.
Harry S. Rohrer.

Inventor:
Wilhelm R. Schmidt.
By Knight Bro's.
Attys.

THE NORRIS PETERS CO., PHOTO-LITHO., WASHINGTON, D. C.

# UNITED STATES PATENT OFFICE.

WILHELM R. SCHMIDT, OF ST. LOUIS, MISSOURI.

## BOX-FASTENER.

SPECIFICATION forming part of Letters Patent No. 456,436, dated July 21, 1891.

Application filed April 1, 1891. Serial No. 387,267. (No model.)

*To all whom it may concern:*

Be it known that I, WILHELM R. SCHMIDT, of the city of St. Louis, in the State of Missouri, have invented a certain new and useful Improvement in Box-Fasteners, of which the following is a full, clear, and exact description, reference being had to the accompanying drawings, forming part of this specification.

This invention relates to an automatic snap-spring fastener for package-boxes whose key-bolt has a single crank or angle handle, that when the box is fastened is hid retired in a recess in the lid-cleat, and when said handles are turned outward for opening, the fastenings are released, and the handles at the same time provide convenient means by which the lid can be raised and removed from the box; and the invention consists in features of novelty hereinafter fully described, and pointed out in the claim.

Figure I is a perspective detail view, and shows the handle of the key-bolt projecting from one end of the lid, as it does when the catch is unfastened. Fig. II is an enlarged horizontal section taken on line II II, Fig. V, and shows the pendent key-bolt fastened to its snap-spring. Fig. III is a like view taken on line III III, Fig. IV, and shows the locking-recess of the pendent key-bolt in disengagement with the snap-spring in its unlocked position. Fig. IV is an enlarged vertical section taken on line IV IV, Fig. II, and shows the spring-fastening in its locked position. Fig. V is a like view taken on line V V, Fig. III, and shows the spring-fastening in its unlocked position. Fig. VI is an enlarged perspective view of the key-bolt, and Fig. VII is an enlarged perspective view of the double parallel-bar snap-spring.

Referring to the drawings, 1 represents the ends, 2 the sides, and 3 the lid, of a box to which my spring-fastener is attached.

4 represents the spring-box-carrier cleats, which are secured by nails or screws 5 to each end of the box in the position of the usual buffer-cleat, on which, when the lid is closed, its pendent cleat 6 rests. The said cleat 6 is secured to the lid by the usual means with nails or screws 7.

8 represents the horizontal spring-locking chamber, which is made in the form of a deep elongated slot which enters from the middle of the inner side of said cleat 4 and extends, preferably, nearly half-way along the same.

9 represents the vertical key-hole that extends through said cleat from top to bottom.

10 represents the double parallel-bar loop-spring, which is inserted in the locking-chamber, its parallel bars being on a horizontal level, respectively, to each other, the long section 11 of said bars, both when operative and when inoperative, fitting snugly along against the face of the end surface of the box when said spring carrier-cleat is attached thereto. The other, being the latching-bar section, rests against the inner surface of the elongated slot 8 in said cleat 4.

13 represents vertical channel-groove key-seats, through the lid-cleat 6, in direct registry (when the lid is closed) with the key-hole 9 in the box-cleat beneath.

14 represents horizontal box-slot chambers above said channel-groove key-seats, and which extend laterally to one side of the same, to allow the recession of the angle-handle 15 of the key-bolt 16 when said key-bolt is turned in its locked position.

17 represents concave locking-recesses in the key-bolts 16, which, when said key-bolts are interlocked with said loop-spring 10, embrace the inner arm of said loop-spring and lock the lid at each end to the box it covers.

The operation in putting the fastening attachment parts together in the construction of the box is to insert the loop-spring 10 in the horizontal spring-locking chamber 8, the latch bar or section 12 of said spring being entered first, and the long section-bar 11 having a reverse presentation, so that when the spring-box-carrier cleat 4, in which said chamber is located, is secured by the nails or screws 5 in its permanent position, as shown in Figs. I, II, III, IV, and V, to the end of the box, the long bar-section 11 of said spring-arm rests and rides against said end of the box and the latching-section 12 against the inner surface of the elongated slot 8. The vertical key-hole 9 through said cleat registers fair for the descent of the bevel point 18 of the key-bolt at the rear of the latching-bar section of the spring, as shown in Figs. II, III, IV, and V.

The key-bolt 16 is inserted in the vertical channel-groove 13 in the lid-cleat, its angle-

handle 15 being housed or passing through the horizontal box-slot 14, and said cleat is then secured to the lid by the nails or screws 7. The said cleats 4 and 6, with their spring-fastening attachments, are duplicated at each end of the box.

The operation in the shutting and fastening of the lid is preferably as follows: The key-bolts 16 are set in their operative positions in the cleats 6 of the lid with the angle-handles 15 in their retired positions within their recession-chambers 14. The lid then has simply to be pressed down, and the bevel points 18 of the key-bolts push the latching-arms 12 of the loop-springs 10 away from their bed-surface in the elongated slot 8 and the key-bolts continue to slide down between said arm and its bed-seat until simultaneously with the lower edges of the lid-cleats 6 coming in contact and resting on the upper edges of the spring-box cleats 4, the concave locking-recesses 17 of said key-bolts automatically snap into engagement with the latching-arm 12 of said loop-springs 10, as shown in Figs. II and IV, and the box is securely fastened. Now it will be seen that when fastened there is no part of the fastening that is exposed, for all parts but the swinging handle 15 are permanently housed when the lid is shut, and said handle is swung round within its recessed chamber when the key-bolt is in its locked position. Therefore, as there is no protrusion of any of said parts the abrasion of the adjoining packages and of the persons and clothes of the freight-handlers is avoided; also, the fastenings, being completely housed, are themselves preserved from injury, and the packages or boxes can be close-piled for carriage and storage, which cannot be done where projecting fastenings interfere with said package. Again, lastly, there being no projection of any part of the fastenings when locked, said fastenings cannot accidentally become unlocked by the movement of packages past each other.

When it is desired to unlock the box or package, the handles 15 of the key-bolts 16 are simply swung around from the position shown in Fig. IV to that shown in Figs. I and V, which turns the concave locking-recess 17 from its locked position (shown in Figs. II and IV) in embrace of the latching-arm 12 of the loop-spring 10 to a position at a right angle to both spring-arms, as shown in Figs. III and V, in which it releases its hold. The outswung handles 15 of the key-bolts, when in their unlocked positions, also form convenient handles by which to elevate the lid from the box or package.

In Fig. VII is shown a modification, in which the latching-arm of the loop-spring is made concavo-convex at its end, instead of straight, as in the form shown in Figs. II and III.

I claim as my invention—

In a box-fastener, the combination of the spring-carrier cleat 4, provided with the elongated spring-locking chamber 8, the loop-spring 10, having a stationary long arm 11 and a latching-arm 12, and the locking recessed key-bolt 16, substantially as and for the purpose set forth.

WILHELM R. SCHMIDT.

In presence of—

BENJN. A. KNIGHT,

ALBERT M. EBERSOLE.