J. H. STEARNS.

CIRCUIT CONTROLLER FOR IGNITION SYSTEMS.

APPLICATION FILED SEPT. 16, 1919.

1,404,328. Patented Jan. 24, 1922.

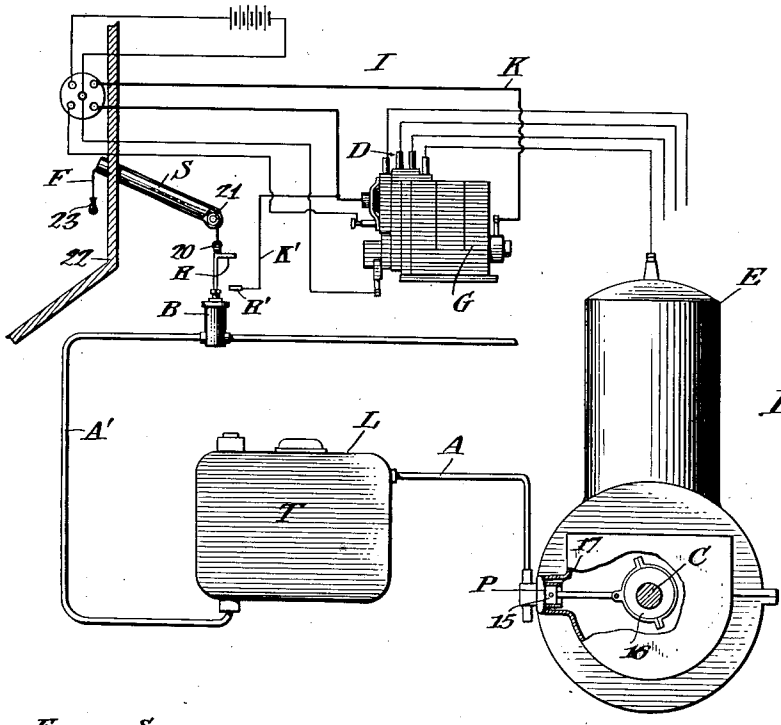

Fig. 1.

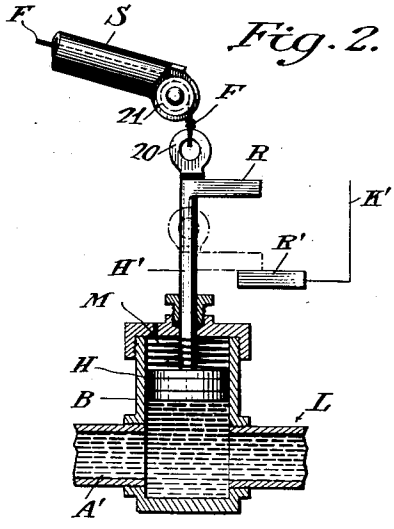

Fig. 2.

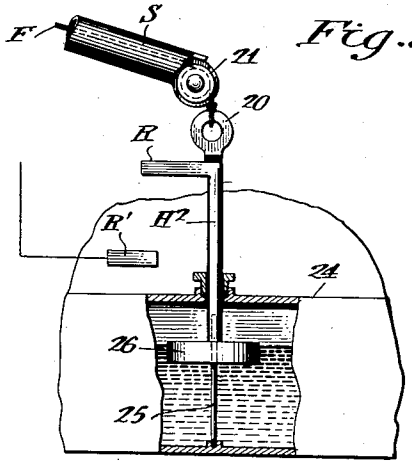

Fig. 3.

WITNESSES

Francis C. Ceden.

E. H. Dorsa.

Joseph H. Stearns, INVENTOR;

BY Munn & Co.

ATTORNEYS

UNITED STATES PATENT OFFICE.

JOSEPH H. STEARNS, OF CASSILS, ALBERTA, CANADA.

CIRCUIT CONTROLLER FOR IGNITION SYSTEMS.

1,404,328. Specification of Letters Patent. Patented Jan. 24, 1922.

Application filed September 16, 1919. Serial No. 324,137.

To all whom it may concern:

Be it known that I, JOSEPH H. STEARNS, a citizen of the United States, and a resident of Cassils, Alberta, Canada, have made certain new and useful Improvements in Circuit Controllers for Ignition Systems, of which the following is a specification.

My invention relates generally to an apparatus for controlling the ignition system of an internal combustion engine, and particularly to a circuit controller which is governed by the lubricating system of an engine for automatically disrupting the ignition system when the oil in the system is insufficient to properly lubricate the engine.

An object of my invention is the provision of a device of the above described character which is designed to automatically short circuit the magneto when the quantity of oil in a pressure system is low, and to give a visual indication as to the position of the circuit controller.

Another object of my invention is the provision of a float operated circuit controller for lubricating systems of the gravity or splash types.

I will describe one form of ignition system, lubricating system and circuit controller embodying my invention, and will then point out the novel features thereof in a claim.

In the accompanying drawing;

Figure 1 is a diagrammatic view showing one form of ignition system, one form of lubricating system and one form of circuit controller embodying my invention;

Figure 2 is an enlarged detailed view partly in section showing the circuit controller shown in Figure 1;

Figure 3 is a view similar to Figure 2 showing a modified form of circuit controller embodying my invention.

Similar reference characters refer to similar parts in each of the several views.

Referring specifically to the drawings, and particularly to Figure 1, E designates generally the conventional type of internal combustion engine, L a pressure system of lubrication, and I an ignition system. The lubricating system L comprises in the present instance a reservoir tank T which is partially filled with oil for distribution to the various bearings of the engine E. The oil contained in the reservoir T is maintained under pressure by means of a pump P actuated by the crank shaft C of the engine E. As shown, the pump P comprises a piston 15 operatively connected to an eccentric 16 mounted on the shaft C, and working within a cylinder 17. The cylinder 17 communicates with the upper part of the reservoir T by means of a pipe A. Oil from the tank T is supplied to the various bearings of the engine by means of a distributing pipe A', such pipe in the present instance being broken away adjacent the engine E to simplify the drawings.

The ignition system shown is of a conventional type, and consequently a detailed description of the same is thought to be unnecessary, however, for a clear understanding of the invention, I will describe the magneto and those connections which are controlled by the circuit controller. The magneto is indicated at G and is inductively associated with a distributor D by means of a conductor K. It will be understood that the conductor K is connected at one of its ends to the low tension terminal of the magneto, while its opposite end is connected to the ground circuit of the magneto.

My invention in its preferred embodiment comprises a casing or cylinder B, which is interposed in the pipe A' of the lubricating system L in the manner shown in Fig. 2, so that the oil in this pipe passes upwardly in the cylinder by virtue of the pressure maintained in the system. Working within the cylinder B is a piston H, the rod H' of which is mounted for sliding movement through the top of the cylinder. Surrounding the rod H' and interposed between the upper wall of the cylinder and the piston H is a coiled retractile spring M. This spring M serves to bias the piston H downwardly within the cylinder B and against the internal pressure of the lubricating system. The tension of the spring M is such that it cannot overcome the normal pressure in the system when there is sufficient oil to properly lubricate the engine E. However, when the oil in the system drops below a predetermined quantity, the spring M in conjunction with the weight of the piston H itself, forces the latter downwardly within the cylinder B.

To effect a control of the ignition system by piston H, I provide the piston rod H' with a contact arm R, which as shown in Figure 2 extends at right angles from the

upper end of the piston rod. When the piston H is in elevated position as shown in Figure 2, the contact arm R is also elevated, but when the piston falls to its lowermost position, the contact arm R engages a stationary contact R'. The contact R' is electrically connected to the conductor K by a conductor K' at a point between the low tension terminal of the magneto G and the rotating contact of the distributor D. The contact R not being insulated from the pipe A', is consequently grounded through the engine E so that when the piston H falls to its lowermost position because of insufficient oil within the lubricating system, the contact R engages contact R' and thereby shunts the distributor D and short circuits the magneto G. This of course discontinues the supply of current to the spark plugs of the engine and thereby brings the engine to a stop, thus indicating that there is an insufficient quantity of oil in the lubricating system, to properly lubricate the engine.

For elevating the piston H to the position shown in Fig. 2. I provide a cable or other flexible means, F, which extends through a conduit S and is connected to a ring 20 formed on the upper end of the piston rod H. To permit free and unrestricted movement of the cable F within the conduit S, I provide a hub 21 journalled in the lower end of the conduit. As shown in Fig. 1, the conduit is arranged on an incline with its lower end disposed directly above the piston rod H, while its upper end extends through the dash board 22 of an automobile. The cable F is of such a length that in the elevated position its upper end depends from the conduit S, such end being formed with a handle 23 for manipulating the same. By this arrangement it will be seen that the position of the piston H and the contact R are shown by the position of the handle 23. That is to say, with the contact R in elevated position in Figure 1, the handle 23 depends from the upper end of the conduit S. Should the contact R drop into engagement with the contact R' the handle 23 will move upwardly and adjacent to the upper end of the conduit S.

From the foregoing description it will be manifest that when the oil within the lubricating system L is insufficient to properly lubricate the various bearings of the engine E, the circuit controller is automatically actuated by the pressure of oil in the system to discontinue the supply of current to the spark plugs. It will be noted that after the piston H has dropped to close contacts R and R', before current can be again supplied to the spark plugs, it is necessary to manually lift the piston H to the elevated position.

In Fig. 3, I have shown a modified form of the circuit controller shown in Figure 2. In this embodiment of my invention the circuit controller is applied to a lubricating system of the gravity or splash type, or any system in which the oil is not held under pressure. As shown in Figure 3, 24 designates a tank forming a part of the lubricating system in which is slidable a rod H^2. This rod H^2 is identical to the rod H' shown in Fig. 2, with the exception that it is tubular to slidably receive a supporting pin 25. The lower end of the rod H^2 is provided with a float 26, and through the rod and float the pin 25 works to guide the two elements during vertical movement. It will be readily understood that the position of the float 26 is determined by the level of the oil within the tank 24, and that the contact arm R engages contact R' when the float 26 is in its lowermost position. The rod H^2 is elevated by mechanism identical to that shown and described in connection with the circuit controller shown in Fig. 2, and consequently a repetition of this description is thought unnecessary.

Although I have herein shown and described only two forms of circuit controllers embodying my invention, it is to be understood that various changes and modifications may be made herein without departing from the spirit of the invention, and the spirit and scope of the appended claim.

Having described my invention, what I claim is:—

A combined pressure indicator and circuit controller for vehicle engines comprising a casing adapted to receive liquid under pressure, a pressure actuated piston within said casing and having a rod extending exteriorly of the casing, the extended portion of said rod being provided with an integral laterally projecting portion constituting a movable contact, a stationary contact exteriorly of the casing and in the path of travel of said movable contact, an inclined conduit passed through the dash of the vehicle, a flexible element passed through said conduit and connected at one end to said rod and having its other end extended beyond said conduit, a handle connected to the extended portion of said flexible element and arranged within sight and convenient reach of the operator whereby the rod may be manually elevated and whereby the handle forms a means to indicate the pressure of the liquid, and a spring between said piston and one end of said casing.

JOSEPH H. STEARNS.