April 7, 1970 H. J. QUALHEIM 3,504,621

MEANS FOR CRUSHING OR FRACTURING DISPOSABLE CONTAINERS

Filed April 22, 1968 2 Sheets-Sheet 1

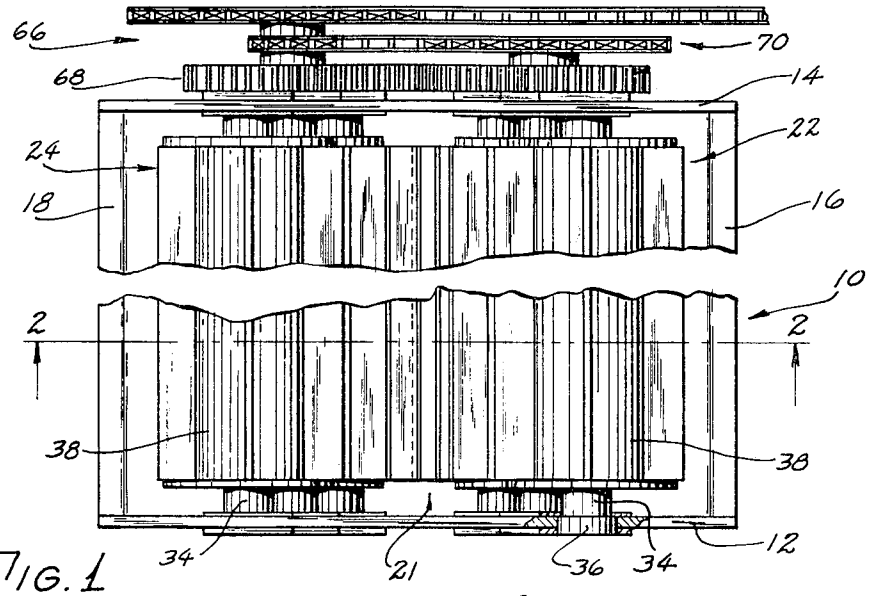

FIG. 1

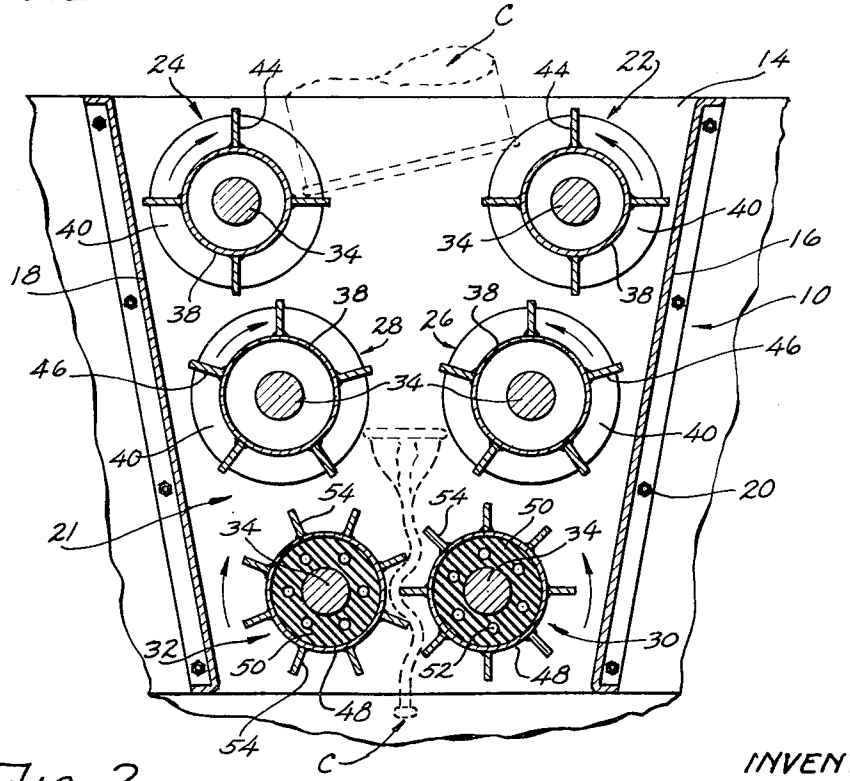

FIG. 2

INVENTOR
HAROLD J. QUALHEIM
BY
Alfred H. Johnson,
Agt.

MEANS FOR CRUSHING OR FRACTURING DISPOSABLE CONTAINERS

Filed April 22, 1968 2 Sheets-Sheet 2

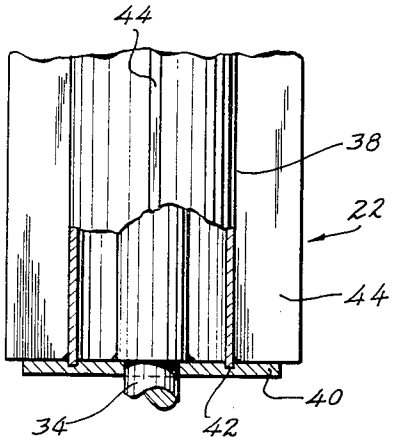

FIG. 3

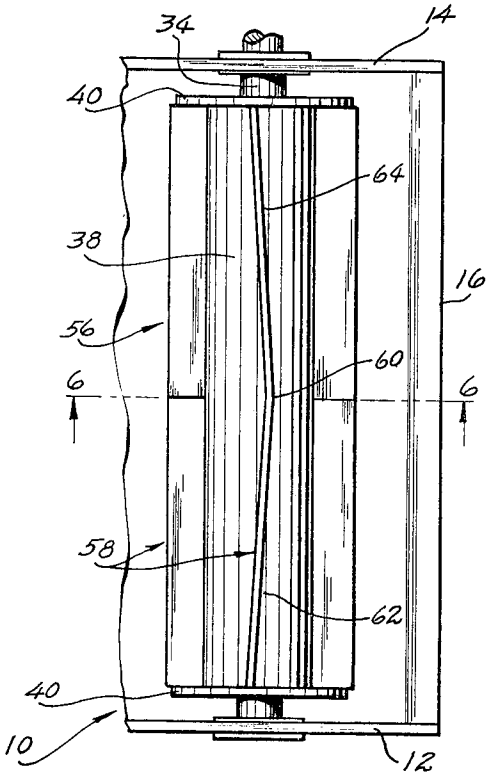

FIG. 5

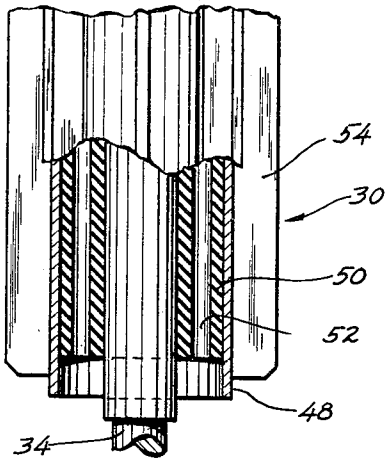

FIG. 4

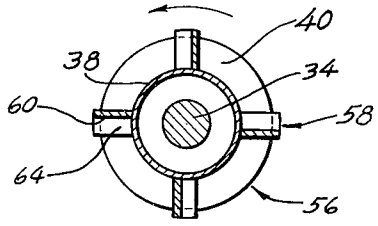

FIG. 6

INVENTOR
HAROLD J. QUALHEIM
BY
Axel H. Johnson,
Agt.

United States Patent Office 3,504,621 Patented Apr. 7, 1970

3,504,621

MEANS FOR CRUSHING OR FRACTURING DISPOSABLE CONTAINERS

Harold J. Qualheim, 111 S. Vincennes Circle, Racine, Wis. 53402

Filed Apr. 22, 1968, Ser. No. 722,898
Int. Cl. B30b 9/20, 3/04
U.S. Cl. 100—96 2 Claims

ABSTRACT OF THE DISCLOSURE

A machine for compacting or crushing discardable containers, such as metal cans, bottles and other frangible objects. A plurality of opposed sets of rollers engage the object which passes between them and which is finally deposited in a receptacle for disposal.

An accumulation of empty metal cans, bottles, cartons, wood crates and miscellaneous containers of various materials waiting to be discarded, often occupies valuable space that is needed for other purposes. To dispose of such objects without crushing them or reducing their volume puts a burden upon waste-disposal departments of municipalities. Space for the deposit of rubbish is becoming increasingly limited, so the compacting of such waste material is desirable in order to conserve space.

An object therefore of this invention is to provide a means of compacting, crushing or fracturing containers that are to be discarded, so that they will occupy a greatly-reduced space.

Another object is to provide a crushing or fracturing machine that will accept containers having a wide range of sizes.

Another object is to provide a machine that will compact, crush or fracture containers of various materials.

Another object is to provide a machine having a positive means of engaging a container so as to effectively convey it through the crushing or compacting cycle.

Another object is to provide a machine that embraces a series of crushing elements that define a converging passageway therebetween, and through which the container passes during the process of crushing.

Another object is to provide a machine having crushing or compacting elements so constructed as to permit them to yield during the passage of the container therethrough.

Further objects and advantages of this invention will become apparent from a consideration of the following detailed description taken in connection with the accompanying drawings wherein an embodiment of the invention is shown. It is, however, to be understood that the invention is not limited to the details disclosed, but includes all such variations as fall within the spirit of the invention.

Referring to the drawings:

FIG. 1 is a plan view of the machine looking downwardly through the chamber.

FIG. 2 is a section taken at 2—2 of FIG. 1.

FIG. 3 is a fragmentary view of one of the upper rollers showing the construction thereof.

FIG. 4 is a fragmentary view of one of the resilient rollers.

FIG. 5 is a plan view of one of the upper rollers embracing a modification.

FIG. 6 is a section taken at 6—6 of FIG. 5.

A typical machine embracing this invention comprises a frame or casing **10** having side plates **12** and **14**. End plates **16** and **18** are secured to side plates **12** and **14** by bolts such as **20**, so as to define a downwardly-converging chamber **21**.

A plurality of opposed pairs, of rigid rollers **22**, **24**, **26**, **28**, **30**, and **32** are mounted in pairs, each pair being spaced below the preceding pair as shown in FIG. 2. However, it is within the purview of the invention to employ more or a less number of rollers if desirable. In this instance, each pair of rollers is positioned in a horizontal plane. The axes of each set of rollers is spaced apart in their respective planes so that as they rotate in the direction of the arrows, their effective peripheries preferably define a downwadly-converging passageway.

Rollers **22** through **32** each comprise a shaft **34** which is journalled at each end in roller bearings **36**, one of which is shown in FIG. 1. These bearings are mounted in suitable openings in side plates **12** and **14**.

Rollers **22** and **24** are identical, and comprise a cylindrical drum **38**. End plates **40** are positioned at each end of the drum **38**, and are provided with a circular groove **42** machined in the face thereof, as shown in FIG. 3. Drum **38** is welded or otherwise secured in the groove to provide support for the drum normal to the axis of shaft **34**. Plates **40** have a central bore to receive shaft **34** which is welded thereto. A plurality of longitudinal ribs **44**, four in this instance, are circumferentially spaced about drum **38** and welded thereto and to plates **40**.

The construction of rollers **26** and **28** is similar to that of rollers **22** and **24** with the exception that rollers **26** and **28** are provided with five ribs **46**.

Rollers **30** and **32** are resilient, and in this instance comprise a drum **48** concentric with shaft **34**. The space between shaft **34** and the inner surface of drum **48** is filled with a resilient yieldable material **50**, such as rubber or similar material, in order to permit the rollers to yield normal to their axes and circumferentially during the final steps of the crushing or compacting process. A means of providing additional resiliency comprises providing longitudinal passageways **52** in the resilient material **50**, and which are spaced about shaft **34** as shown in FIGS. 2 and 4. A plurality of projections or ribs **54**, preferably eight in this instance, are welded or otherwise fixed to the periphery of the drum **48**. Rollers **30** and **32** are so positioned that the ribs **54** overlap circumferentially as shown in FIG. 2.

It is within the spirit of this invention to vary the number of ribs carried by the various rollers and to also modify their design. One modification is shown in FIG. 5, wherein roller **56** has a modified rib **58**. Ribs **58** have acute leading edges and are provided with vertices such as at **60** terminating in leg portions **62** and **64** which diverge toward plates **40**. Thus a container being compacted or crushed will be urged centrally toward the vertex **60**, and thus be guided through the chamber **20** centrally of the rollers.

It is within the spirit of this invention to employ all rollers of the type indicated **22** through **28**, or the type indicated **30** and **32**, or various combinations of them as desired.

Rollers **22** through **32** are all rotated downwardly toward each other in the directions shown by the arrows in FIG. 2.

The means of rotating the rollers **22** through **32** is indicated at **66** of FIG. 1, and comprises gears **68** which are secured to shafts **34** and includes suitable idler gears. A chain-and-sprocket arrangement **70** conveys power from a suitable motor which is not shown. Other details of the means of rotating the rollers are not described as they are conventional and not a part of the invention.

A container C, prior to passing through the machine, is shown in FIG. 2 by dotted lines. The final treatment of the container C is indicated between rollers **30** and **32** where it is finally compacted prior to its deposit in a receptacle.

The above being a complete description of an illustrative embodiment of the invention, what is claimed as new and desired to be secured by Letters Patent of the United States is:

1. A means of compacting or crushing containers or similar objects, comprising, in combination a frame defining a chamber, a plurality of opposed rigid rollers and a plurality of opposed resilient rollers journalled in said chamber, each of said rigid rollers having peripherally-spaced longitudinal projections axially co-extensive therewith, said rigid rollers terminating axially in end plates normal to the axes of said rollers, said plates being of a diameter in excess of that of said rollers, each of said resilient rollers comprising a shaft, a drum co-axial with said shaft and defining a peripheral space surrounding said shaft, radial support for said drum with respect to said shaft, comprising resilient material filling said space, and peripherally-spaced longitudinal projections integral with said drum and co-extensive therewith.

2. The means set forth in claim 1, in which said longitudinal projections have a central vertex with leg portions diverging in the direction of rotation of said rollers, and having an acute leading edge.

References Cited

UNITED STATES PATENTS

382,973	5/1888	Groat	241—154 XR
935,630	10/1909	Abernathy	241—156
1,384,103	7/1921	Smith	72—187
2,374,194	4/1945	Grupe	29—130 XR
2,414,855	1/1947	Cornell	241—159 XR
3,085,384	4/1963	Adee et al.	56—1
3,155,028	11/1964	Morgenson	100—172 XR

BILLY J. WILHITE, Primary Examiner

U.S. Cl. X.R.

29—121; 100—172, 176; 241—99, 159