Aug. 17, 1965 A. HANCART 3,200,810

HOT AIR GENERATOR

Filed March 27, 1963

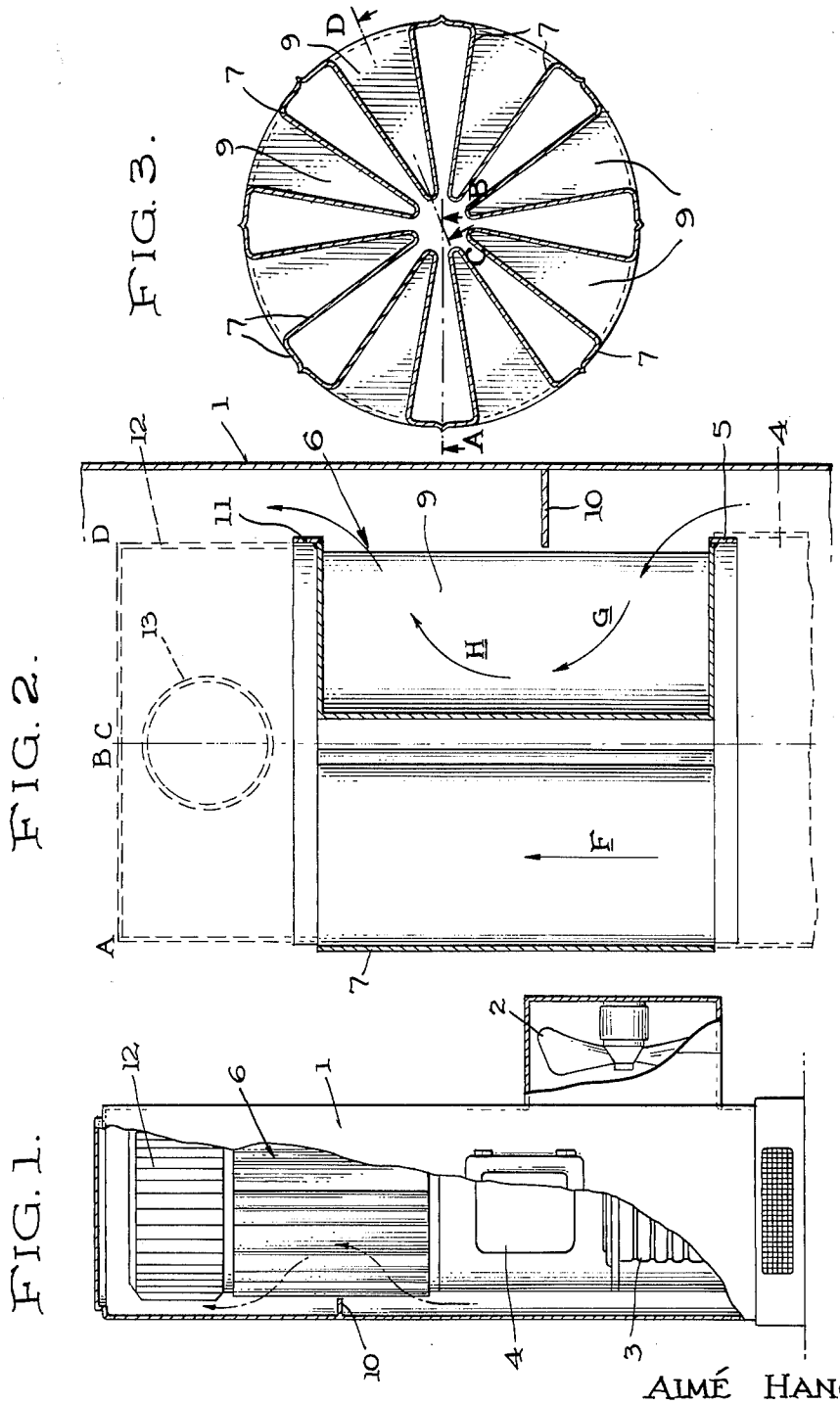

INVENTOR

AIMÉ HANCART

BY Emary L. Groff Jr.

ATTORNEY

United States Patent Office

3,200,810

Patented Aug. 17, 1965

1

3,200,810

HOT AIR GENERATOR

Aimé Hancart, Aubenas, France, assignor to S.A. la Couvinoise, Couvin, Belgium, a corporation of Belgium

Filed Mar. 27, 1963, Ser. No. 268,376
Claims priority, application France, Apr. 25, 1962, 895,478
1 Claim. (Cl. 126—110)

The present invention has for its object the execution of a hot air generator adapted to transfer the heat produced by a burner burning a solid, liquid or gasiform fuel to air flowing over the surfaces of a suitable heat exchanger under high yield conditions, with a bulk reduced to a minimum.

The improved generator of hot air according to the invention is contained inside a metal or the like sheath having a circular or square cross-section and forming a header through which air flows under the action of a fan located outside said sheath, which latter carries inside it in superposition the following parts: at the lower end, a gasifying burner and above the latter and above the input of air entering the sheath, a cylindrical heating body made of a sheet of ordinary or stainless steel inside which the combustion is propagated vertically and then, over said body, a heat exchanger constituted by elements arranged in star formation and forming between them radial recesses, said heat exchanger being finally capped by a smoke box provided with a lateral or an axial output, the assembly between said heat exchanger and the heating body, on the one hand, and the smoke box, on the other hand, being provided by the fitting of a coaxial ring between the parts considered.

The heat exchanger made of sheets of ordinary or stainless steel, is constituted by hollow stamped radial elements arranged in star formation, extending in vertical planes and welded together at their inner ends, each element being in the shape of a sector of the circle enclosing the heating body and the outer periphery of each element being formed by an arc of a constant length of said circle.

A deflector is fitted inside the sheath between the latter and the periphery of the heat exchanger and towards the middle of the height of the latter so as to form a diaphragm which constrains the hot air to flow upwardly through the recesses formed between the elements in star formation of the heat exchanger.

The accompanying drawing illustrates, by way of example, a preferred embodiment of the invention. In said drawing:

FIG. 1 is an elevational view of the generator executed in accordance with the invention, the actual sheath being partly torn off.

FIG. 2 is an elevational view, on a larger scale, of the heat exchanger capped by its smoke box, the left-hand side corresponding to a half section through line AB of FIG. 3, while the right-hand cross-section is executed through line CD of FIG. 3.

FIG. 3 is a transverse cross-section through the heat exchanger.

The generator according to the invention is carried inside a sheath **1** made of metal or any other suitable material and showing a circular or square cross-section, said sheath receiving the air flowing under the action of the fan **2** located outside said sheath.

Said sheath contains, when considered from bottom to top, first a burner **3** burning a solid, liquid or gasiform fuel so as to heat a cylindrical body **4** in the shape of a cylinder of ordinary or stainless steel sheet material and inside which the combustion is propagated vertically, said body **4** lying inside the sheath at a level which extends into the path of the input of the air delivered by the fan **2**.

2

Over the body **4** is fitted, with the interposition of a coaxial ring **5**, a heat exchanger **6** which latter is constituted by radial elements **7** arranged in star formation and extending in vertical planes, the successive elements being welded to gether at their outer sides as illustrated in FIG. 3.

Each element **7** is enclosed inside a section of the geometrical cylinder circumscribing the heating body **4** while the outer end of each said element extends along the periphery of said cylinder over an arc the length of which is the same for all the elements.

The relationship between said arc length C, the diameter D of the cylinder and the number N of the sectors forming the heat exchanger, is as follows:

$$\pi D = CN$$

The inner volume of the heat exchanger includes thus in horizontal cross-section N circular sectors producing a subdivision into separate sheets of the rising stream of burnt gases.

The elements **7** of the heat exchanger form the inner section of the heat exchanger, which section provides a direct passageway for the burnt gases produced by the combustion of the fuel in the direction illustrated by the arrow F, as shown on the left-hand side cross-section of FIG. 2, while the radial recesses **9** provided on the outside of the heat exchanger are swept by the air to be heated as illustrated on the right-hand side cross-section of FIG. 2.

A deflector **10** is arranged inside the sheath round the periphery of the heat exchanger **6** at about mid-height of the latter. Said deflector acts as a diaphragm which ensures the entrance of the flow of air inside the radial recesses **9** extending between the star-shaped elements of the heat exchanger.

The hot air follows the path illustrated by the arrows G and H in FIG. 2.

The heat exchanging surface between the air flowing along the outer surfaces of the heat exchanger and the burnt gases has a value equal to ND sq. m. per meter of height of the heat exchanger in the case of elements having flat surfaces and 1.4 ND sq. m. per meter of height of a heat exchanger having corrugated surfaces.

Above the heat exchanger **6** is fitted, also with the interposition of a concentric ring **11**, a smoke box **12** which may be provided, either with a lateral output as illustrated in FIG. 2, or else with an axial output.

The advantages of the generator executed in conformity with the invention are chiefly as follows:

A lamellated subdivision of the flow of burnt gases and of the air to be heated which furthers the heat exchanging procedure.

Losses of head limited by the absence of any sudden changes in the direction of flow of the heating and heated fluids.

An easy sweeping if required.

An easy execution of homothetical generators as required by the heat-producing capacities to be considered.

The system including the heating body **4** and the smoke box **12** forms a fluidtight unit adapted to expand freely inside the sheath **1**.

Various detail modifications may be brought to the execution of the generator illustrated as concerns the nature, the number and size of its component parts, the method of assembling said parts inside the sheath, etc. without this unduly widening the scope of the invention, as defined in the accompanying claim.

What I claim is:

In a generator of hot air comprising in combination: an outer sheath having therein an upright heating body consisting of a fuel burner, a combustion chamber, a heat exchanger and a smoke box interconnected serially in the order listed, said sheath being separated

from said interconnected members by an air passage, said heat exchanger consisting of elements which are all alike, one portion of said elements comprising vertical walls of generally flat sides which have approximately the form of dihedral angles whose planes are axial planes of a main cylinder, said walls extending radially in said cylinder to form said dihedral angles, and another portion of said elements comprising vertical arcuate portions welded together so as to form a cylinder presenting deep alveoles, each dihedral angle being bounded at the top and bottom by sectors of welded sheetmetal, welded to said vertical walls, said sheath surrounding said heat exchanger in spaced relation thereto;

a deflector formed by a sheet metal diaphragm mounted in the air passage inside the sheath and on the periphery of said heat exchanger compelling the air which rises in the sheath to enter the interior of the dihedral angles;

a fan forcing air to be heated to flow past said deflector and to sweep the inside of the vertical walls of the dihedral angles and the elements of cylindrical surface while the burnt and hot gases rise in the interior

of the assembly and pass along the outside of the walls of each dihedral angle and the inside of the cylindrical elements; and

a circular ring fitting effecting the assembly of said heat exchanger to said combustion chamber and another circular ring fitting effecting the assembly of said heat exchanger to said smoke box.

References Cited by the Examiner

UNITED STATES PATENTS

2,277,340	3/42	Magiera	126—90 X
2,428,066	9/47	Ellis	165—154 X
2,430,227	11/47	Jensen et al.	165—154 X
2,600,020	6/52	Pietsch	126—110
2,655,143	10/53	Herbster	126—110 X
2,692,763	10/54	Holm.	

FOREIGN PATENTS

64,927	7/55	France.

JAMES. W. WESTHAVER, *Primary Examiner.*

FREDERICK L. MATTESON, JR., *Examiner.*