Jan. 25, 1955 J. T. EFFORD 2,700,578

DISPENSING PACKAGE

Filed March 18, 1952 2 Sheets-Sheet 1

Fig. 1.

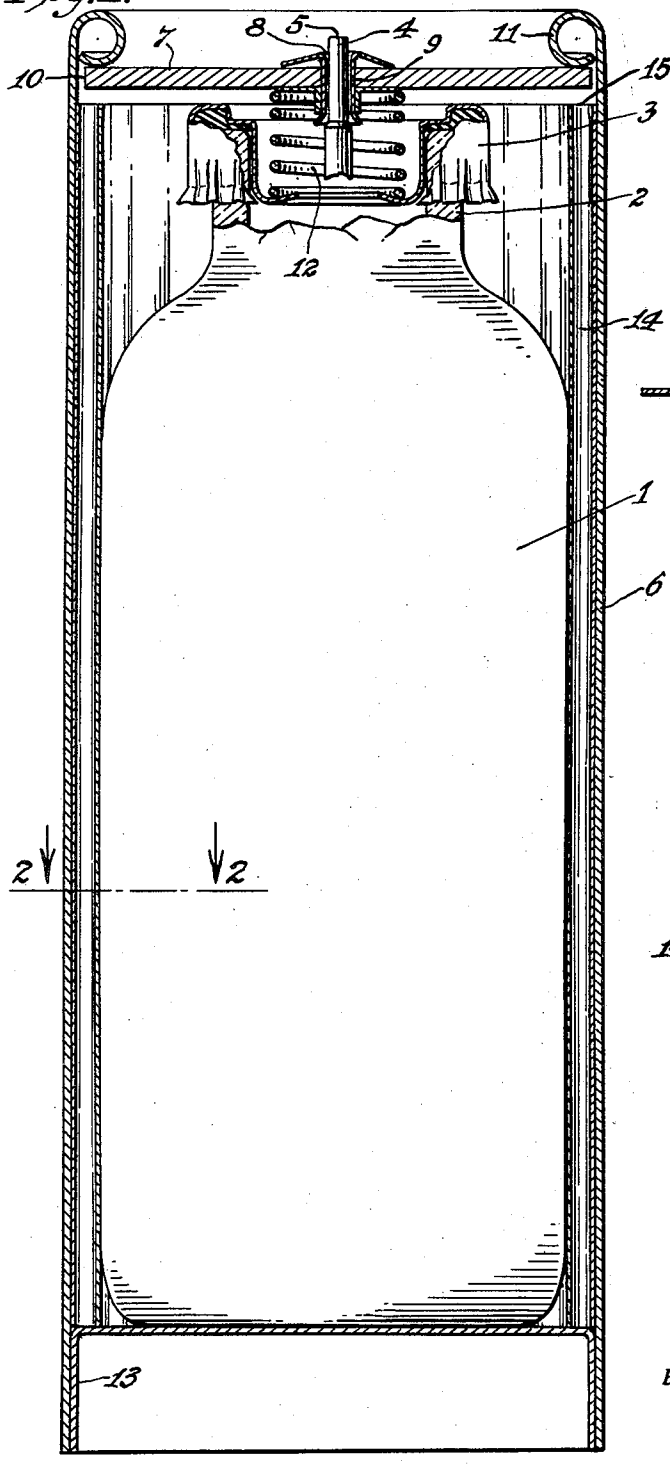

Fig. 3A.

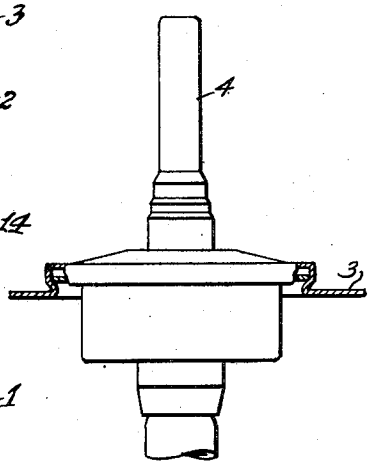

Fig. 2.

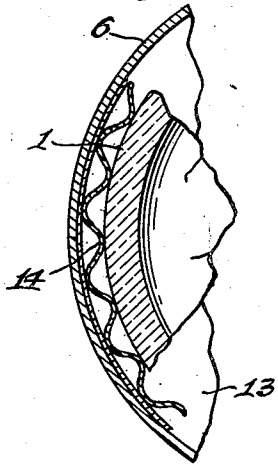

INVENTOR.
JOHN T. EFFORD

BY Kenyon & Kenyon

ATTORNEYS

Jan. 25, 1955 J. T. EFFORD 2,700,578

DISPENSING PACKAGE

Filed March 18, 1952 2 Sheets-Sheet 2

Fig. 3.

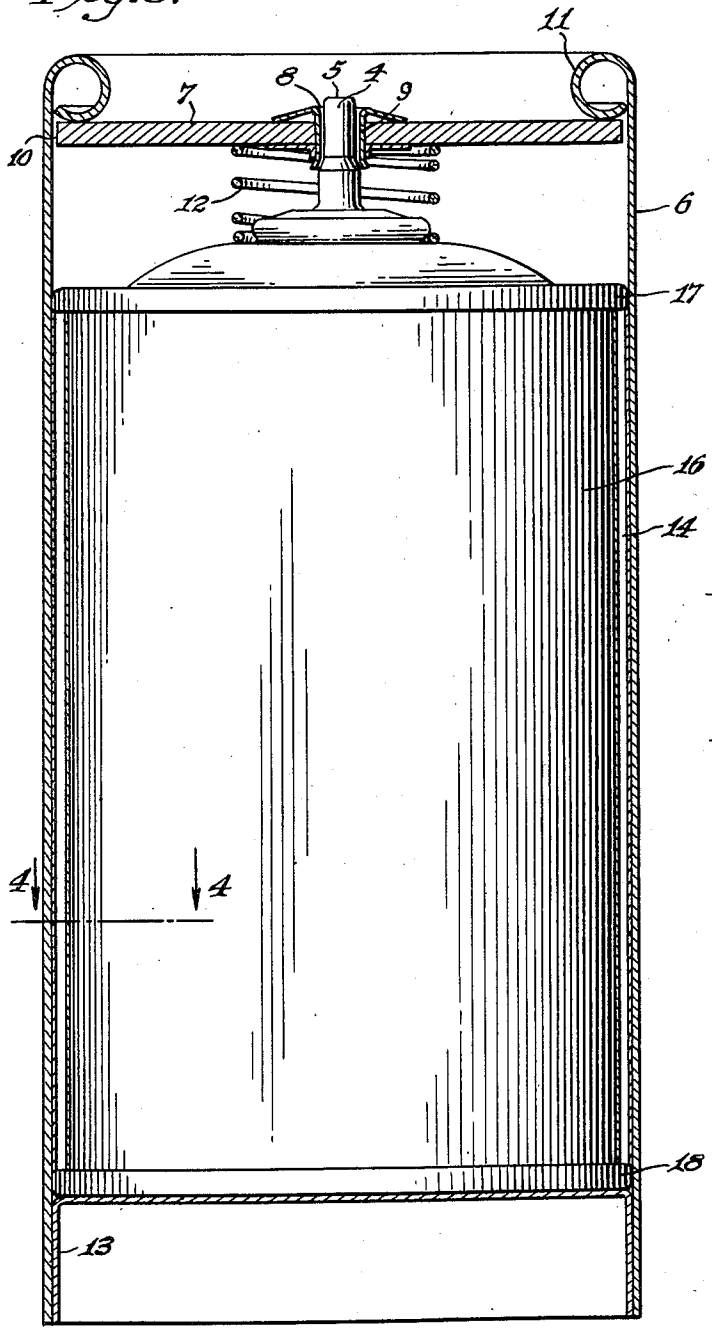

Fig. 4.

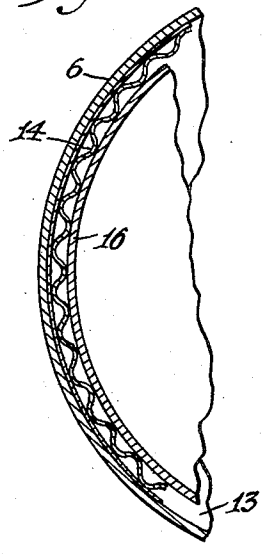

INVENTOR.
JOHN T. EFFORD

BY

Kenyon & Kenyon

ATTORNEYS

United States Patent Office

2,700,578

Patented Jan. 25, 1955

2,700,578

DISPENSING PACKAGE

John T. Efford, Stratford, Conn., assignor to Bridgeport Brass Company, Bridgeport, Conn., a corporation of Connecticut

Application March 18, 1952, Serial No. 277,321

7 Claims. (Cl. 299—95)

This invention relates to a dispensing package of the type including a container enclosing a charge of material and having a top provided with an outlet closed by a dispensing valve having a dispensing valve nozzle which projects upwardly from this top, the nozzle being laterally rockable and the valve being constructed to open when the nozzle is rocked. The dispensing valve is normally-closed and its nozzle may be rocked by finger pressure to dispense the material through the nozzle. A flow of the material through the nozzle may be effected by the material including as a propellant a liquefied gas maintained under pressure by the container and valve. The size of the package is such that it may be operated with one hand.

A package of the above type is disclosed by Patent No. 2,582,262 issued to Nils Otto Loven and John T. Efford on January 15, 1952.

It is usual to make the container of such a package in the form of a sheet metal can or so-called tin can, usually of the type known commercially as a sanitary can. Such cans have the advantage that they may be produced inexpensively by using automatic can making machinery.

Although such cans are satisfactory generally, there are certain exceptions. For example, the use of a sheet metal can limits the ingredients charged in the can to those which are sufficiently non-reactive to the inside of commercially available can and can coating materials to permit the package to have a shelf life long enough to satisfy commercial requirements. Furthermore, under wartime conditions sheet metal may become unavailable for civilian use. Another objection to the use of the ordinary can is that it imposes limitations on the decorative appearance or commercial dress of the package. This latter objection extends to the feel of the product to the customer, the ordinary can inducing a sense of cheapness in some persons and in all events feeling hard and cold. In fact, the can actually cools during the dispensing of liquefied gas due to the boiling action when the valve nozzle is rocked so as to open the inside of the package to the atmospheric pressure when effecting the dispensing action.

The substitution of a glass bottle for the ordinary can provides attractive possibilities in the direction of overcoming many of the above objectionable features of a can. On the other hand, the use of glass is not considered entirely safe by many as a container for liquefied gas confined under pressure by the glass. Because of this, government restrictions respecting shipping and the like are somewhat restrictive respecting the use of glass. A reputable manufacturer, in any event, hesitates to use glass to confine liquefied gas and the like under pressure, particularly when the product is intended for domestic use.

One of the objects of the present invention is to provide a new package, of the type described, which permits the use of either a can or glass container for enclosing the charge of material yet which overcomes all or most of the objections noted respecting the use of such containers. The invention is intended to be of practical use in a commercial sense, and, therefore, another object is to attain the first-mentioned objective without increasing manufacturing costs to such an extent as to raise the retail selling price so much as to make the product unacceptable to the public.

As a means for disclosing the principles and operation of the invention two specific examples of packages incorporating the invention are disclosed below with the aid of the accompanying drawings.

In these drawings:

Fig. 1 is a vertical section of a package using a glass bottle as the container;

Fig. 2 is a cross section of a segment of Fig. 1, it being taken on the line 2—2 in Fig. 1;

Fig. 3*a* is a vertical section showing the upper portion only of the package shown by Figs. 1 and 2, and serving to illustrate a complete cap and valve assembly;

Fig. 3 is a section like that of Fig. 1 but showing a second example using a sheet metal can as the container; and

Fig. 4 is a cross section of a segment of Fig. 3 taken on the line 4—4 in Fig. 3.

In the example using the glass bottle, shown by Figures 1 and 2, the bottle 1 is made with a cylindrical body and a reduced but still relatively large neck 2. The bottle has walls which are thick enough to withstand under normal conditions the internal pressure of liquefied gas propellants of the kind ordinarily used. A special crown cap 3 is applied to the mouth of the bottle, this cap being shaped to provide a top substituting for the top arrangements of the valve assemblies of the Loven and Efford patent. In view of the disclosure of this patent Fig. 1 shows only the dispensing valve nozzle 4, it being understood that when this nozzle 4 is rocked by appropriate finger pressure that it operates the valve arrangement opening the inside of the bottle 1 to the atmosphere so as to effect the dispensing action. The charged material then sprays out through an orifice in the top 5 of the nozzle 4.

The bottle 1 is charged with any of the usual liquefied gases which may be used to propel the ingredients which it is desired to spray into the atmosphere. Since the bottle 1 is made of glass it is inert to practically all ingredients which anyone would ever want to use in connection with this type of package.

The appearance of the bottle 1 is improved and a high safety factor is provided by a heavy and stiff paper casing 6 of cylindrical form telescoped over the glass bottle container 1. This casing 6 is long enough to have a top portion projecting a substantial distance above the upper end 5 of the nozzle 4. A heavy and stiff paper disk 7 has a hole 8 through which the nozzle 4 projects. This disk 7 encircles the nozzle 4 and it is connected rigidly to this nozzle by a metal bushing assembly 9 through which the nozzle 4 is press-fitted and which clamps the upper and lower surfaces of the disk 7. The periphery 10 of the disk 7 is adjacent to the inside of the casing 6 but is spaced therefrom throughout enough to permit the disk 4 to rock in any lateral direction with the nozzle far enough for the latter to perform its valve-opening function. The disk 7 is positioned below the top of the casing 6 and the top edge portion of the latter is curled inwardly to provide an inwardly extending flange 11 having a tubular cross-sectional shape. The bottom of this flange and the top of the periphery of the disk 7 interengage, the flange 11 overlapping the disk's periphery enough to conceal the disk's edge.

Now although the disk 7 cannot move upwardly, finger pressure on its periphery at any point rocks this point downwardly with the diametrically opposite portion of the disk fulcruming on the bottom part of the flange 11 that is above this opposite disk portion. As may be understood from the Loven and Efford patent the valve assembly associated with the nozzle 4 is such that the nozzle 4 literally rocks, by which it is meant that the nozzle not only swings but moves downwardly. It follows that the disk 7 and nozzle 4 both have substantially the same motion and that finger pressure on any part of the periphery of the top of the disk 7 provides the nozzle 4 with a valve-opening motion.

A helical coil compression spring 12, encircling the nozzle 4, is interposed between the bottom of the disk 7 and the container top provided by the bottle cap 3. This spring may be relatively stiff or strongly elastic since the disk 7 provides such a good finger purchase for the user. This makes the package more secure during shipping and handling, particularly since everything that can open the valve is protected by the top edge of the casing 6.

The casing 6 is further made long enough so that its

bottom end extends below the bottom of the bottle 1. A cup 13, pressed from heavy and stiff paper, is inverted and telescoped up into the bottom end of the casing 6 so that the bottom of the cup engages and supports the bottom of the bottle 1. The side wall of the cup 13 is adhesively secured or otherwise fastened to the inside of the casing 1. Thus a bottom closure is provided which holds the bottle 1 upwardly against the elastic force of the spring 12 which biases the stiff paper disk 7 upwardly against the bottom of the flange 11. As previously explained the flange 11 restrains upward motion of the entire periphery of the disk 7. This bottom closure has the further advantage that it holds the bottom of the bottle 1 well up inside of and above the bottom edge of the stiff paper casing 6, thus protecting the bottom of the bottle during rough handling of the package.

Single faced corrugated paper 14 is wrapped as a single layer around the bottle 1 between its outside and the inside of the casing 6. The faced side of this material engages the inside of the casing 6. This corrugated paper may be the product customarily used as an elastic shock-absorber for packing and packaging purposes. It is arranged as a single but complete cylinder between the bottle 1 and casing 6 and the inside size of the latter is proportioned so that the bottle 1 is firmly but elastically gripped by the longitudinally extending convex ribs provided by the corrugated paper.

The layer or wall of corrugated paper 14 is arranged as indicated with its corrugations extending vertically. The length of this layer or wall is such that its lower end engages and is supported by the bottom of the cup 13 while its upper end 15 is spaced slightly below the bottom of the rockable stiff paper disk 7. This restricts the rocking action of the disk 7 since the latter is large enough in diameter to overhang the upper end 15 of the corrugated paper wall or layer. The arrangement is such that although the disk 7 may be rocked far enough to effect the valve opening action it cannot be rocked much farther than this amount. Thus in spite of the good finger purchase provided by the disk 7 the user is prevented from causing such excessive rocking action as might damage the valve parts associated with the nozzle 4.

The mode of making the described package should be obvious to anyone skilled in the art. The ultimate user may be informed of the mode of operation by the application of an appropriate legend to the top of the paper disk 7. The manner in which this example of the invention achieves the stated objects should be fairly obvious. By way of emphasis, note that the package presents the appearance of a smooth paper tube the outside of which may carry any decoration, trade-mark, advertising matter or the like within the ability of the paper printing art. During shipment and use the glass bottle is protected against shock damage in an effective manner, and the user is protected against injury in the event the bottle 1 should burst from the internal pressure or by being dropped with great force. The top closure or cover 7 may be made of very heavy paper, the shape of the flange 11 provides considerable structural rigidity and, therefore, the user is well protected should the crown top 3 be forced off by the internal pressure. The package has a nice feel to the user and the corrugated paper 14 not only protects against physical damage but it also prevents the package from having the hard and cold feel of the open can type which has heretofore been customary. Although the cost of the package is increased somewhat the simplicity of the component parts is such that the manufacturing cost is held to a minimum both respecting materials and assembly.

The example shown by Figures 3 and 4 is like that of the first example already described as to many of its parts and these corresponding parts are given the same numerals as before wherever possible.

This second example differs from the first in that the container is a metal can 16. This may be a standard can with the usual can ends providing the can with top and bottom flanges 17 and 18 respectively. Since the can does not need the same physical protection as does the bottle 1, the corrugated paper layer 14 is in this instance positioned between these flanges 17 and 18 and is only thick enough to just tightly fill the space that would otherwise exist between the inside of the casing 6 and the cylindrical outside of the can 16. The ends of the layer or wall 14 are thus engaged by the can's flanges and is thus positively positioned.

Otherwise than as described this second example is like that of the first, excepting for the illustrated change in proportioning due to the use of a standard can shape. It has all of the advantages of the first example excepting, of course, that the can does not require the physical protection or safeguards which stand out in the case of the example embodying the glass bottle container, nor does it have the chemical inertness of glass. The hard and cold feel of the can is eliminated. It is to be understood that although the casing 6 is made of paper that is heavy and hard enough to be stiff that this kind of paper still does not have the unpleasant hardness and coldness of a tin can.

It is to be noted that as to both examples the packages have the further advantages that either the bottle or the can may be produced in large quantities as exposed products for commercial or military use where the disadvantages previously noted may be tolerated. Then for domestic or civilian use the same containers may be made up into the described packages without necessitating changes in the manufacturer's production lines.

I claim:

1. A dispensing package including a container enclosing a charge of material and having a wall and a dispensing valve nozzle projecting from this wall, said nozzle being movable to dispense the material, a casing telescoped over said container and having an end projecting beyond said wall, a closure for said end and having a hole through which said nozzle projects, said closure being movable and connected to said nozzle so that movement of said closure moves said nozzle, said end having an internal flange overlying said wall, a compression spring interposed between said closure and said container and arranged so as to bias said closure against said flange and means for holding said container from moving away from said end of the casing.

2. A dispensing package including a container enclosing a charge of material and having a wall and a dispensing valve nozzle projecting from this wall, said nozzle being movable to dispense the material, a casing telescoped over said container and having an end projecting beyond said wall, a closure for said end and having a hole through which said nozzle projects, said closure being movable and connected to said nozzle so that movement of said closure moves said nozzle, said end having an internal flange overlying said wall, and a compression spring interposed between said closure and said container and arranged so as to bias said closure against said flange, said casing having an end projecting beyond the portion of said container opposite to said wall and a closure for this second-named end and which is arranged to position said portion so as to hold said container against the force of said spring.

3. A dispensing package including a container enclosing a charge of material and having a top from which a dispensing valve nozzle projects upwardly, said nozzle being laterally rockable to dispense the material, a casing telescoped over said container and having a top portion projecting above the upper end of said nozzle, a disk having a hole through which said nozzle extends and encircling and connected with said nozzle and having a periphery adjacent to the inside of said casing but spaced therefrom enough to permit said disk to rock, said disk being positioned below the top end of said casing, means for restraining said disk's periphery from moving upwardly while permitting downward movement thereof, means for elastically biasing said disk upwardly and means for holding said container against moving downwardly.

4. A dispensing package including a container enclosing a charge of material and having a top from which a dispensing valve nozzle projects upwardly, said nozzle being laterally rockable to dispense the material, a casing telescoped over said container and having a top portion projecting above the upper end of said nozzle, a disk having a hole through which said nozzle extends and encircling and connected with said nozzle and having a periphery adjacent to the inside of said casing but spaced therefrom enough to permit said disk to rock, said disk being positioned below the top end of said casing, a flange projecting inwardly from the inside of said casing and having a lower surface engaged by the top of said disk's periphery, a spring interposed between said container's

top and the bottom of said disk and urging the latter's periphery up against said flange's surface, and a bottom for said casing and arranged to support the bottom of said container and hold the latter against moving downwardly.

5. A dispensing package including a can enclosing a charge of material and having a top from which a dispensing nozzle projects upwardly, said nozzle being laterally rockable to dispense the material therethrough and said can having outwardly projecting top and bottom flanges, a layer of corrugated paper wrapped around said can between and engaged by said flanges, a paper casing telescoped over said can and layer and having a top portion projecting beyond the top end of said nozzle and a bottom end portion projecting beyond the bottom of said can, a stiff disk having a hole through which said nozzle projects and a periphery extending to adjacent to the inside of said casing, said disk being connected to said nozzle and rocking with said nozzle and said casing's top portion being curled inwardly to define an inward flange overlying said disk's periphery and engaged by the latter, a coil compression spring encircling said nozzle between said disk and said can's top and biasing said disk against said flange, and a bottom for said casing positioned to engage and hold said can against the force of said spring.

6. A dispensing package including a glass bottle enclosing a charge of material and having a top from which a dispensing nozzle projects upwardly, said nozzle being laterally rockable to dispense the material therethrough, a casing telescoped over said bottle and having a top portion projecting above the top of said nozzle, a closure for the top of said casing and having a hole through which said nozzle extends so to engage the closure and a periphery extending towards the inside of said casing, means for engaging said periphery and holding it against upward movement, spring means for biasing said closure upwardly, said closure being free to move downwardly against the bias of said spring means and a bottom closure for said casing for holding said bottle therein.

7. A dispensing package including a container enclosing a charge of material and having a top from which a dispensing nozzle projects upwardly, said nozzle being laterally rockable to dispense the material therethrough, a casing telescoped over said container and having a top portion projecting beyond the top end of said nozzle, a closure for said top portion and having a hole through wihch said nozzle extends and a periphery adjacent to the inside of said casing, means extending inwardly from said inside and overlying said closure and engaging the same, and a layer of material between said container and casing and extending upwardly and terminating adjacent to the bottom of said closure, said closure being connected with and rockable with said nozzle within limits set by the space between said layer and the bottom of said closure.

References Cited in the file of this patent

UNITED STATES PATENTS

697,496	Klotz	Apr. 15, 1902
1,830,591	Clark	Nov. 3, 1931
1,961,371	Mapes	June 5, 1934
2,582,262	Loven et al.	Jan. 15, 1952
2,602,700	Ryan	July 8, 1952
2,607,627	Gregg	Aug. 19, 1952
2,610,940	Endicott	Sept. 16, 1952